MOTOROLA SOLUTIONS

PROFESSIONAL DIGITAL TWO-WAY RADIO

MOTOTRBO™

CM7668/CM7668i, XiR M8660/XiR M8660i, XiR M8668/XiR M8668i ALPHANUMERIC DISPLAY MOBILE RADIO

USER GUIDE

en-US

zh-CN

ja-JP

ko-KR

id-ID

JANUARY 2021

© 2021 Motorola Solutions, Inc. All rights reserved.

MN003675A01-AH

This is to declare that MSI products comply with the EU Directive 2011/65/EU (Restriction of Hazardous Substance or RoHS-2) and India RoHS, including applicable exemptions, with respect to the following substances:

Lead (Pb) < 0.1% by weight (1000 ppm)
Mercury (Hg) < 0.1% by weight (1000 ppm)
Cadmium (Cd) < 0.01% by weight (100 ppm)
Hexavalent Chromium (Cr6+) < 0.1% by weight (1000 ppm)
Polybrominated Biphenyls (PBB) < 0.1% by weight (1000 ppm)
Polybrominated Diphenyl Ethers (PBDE) < 0.1% by weight (1000 ppm)

Contents

Important Safety Information..... 32
Software Version..... 33
Copyrights..... 34
Computer Software Copyrights..... 36
Radio Care..... 37
Chapter 1: Getting Started..... 39
1.1 Turning the Radio On..... 39
1.2 Turning the Radio Off..... 39
1.3 Adjusting the Volume.....39
Chapter 2: Radio Controls.....40
2.1 Volume/Channel Knob.....40
2.1.1 Setting Dual Knob Operation Preference..... 41
2.2 Keypad Microphone Buttons..... 42
Chapter 3: WAVE..... 44
3.1 WAVE OnCloud/OnPremise.....44
3.1.1 Switching from Radio Mode to WAVE Mode..... 44
3.1.2 Making WAVE Group Calls.....45
3.1.3 Receiving and Responding to WAVE Group Calls..... 45
3.1.4 Receiving and Responding to WAVE Private Calls..... 46
3.1.5 Switching from WAVE Mode to Radio Mode 46
3.2 WAVE Tactical/5000.....47
3.2.1 Setting Active WAVE Channels 47
3.2.2 Viewing WAVE Channel Information.....47
3.2.3 Viewing WAVE Endpoints Information.....48
3.2.4 Changing WAVE Configuration..... 48
3.2.5 Making WAVE Group Calls.....49
Part I: Capacity Max..... 50
4.1 Push-To-Talk (PTT) Button..... 50
4.2 Programmable Buttons.....50
4.3 Assignable Radio Functions..... 51
4.4 Assignable Settings or Utility Functions..... 53
4.5 Accessing Programmed Functions.....53
4.6 Status Indicators.....54
4.6.1 Icons..... 54

4.6.2 LED Indicator..... 60
4.6.3 Tones.....61
4.6.3.1 Audio Tones.....61
4.6.3.2 Indicator Tones..... 62
4.7 Registration..... 62
4.8 Zone and Channel Selections..... 63
4.8.1 Selecting Zones 64
4.8.2 Selecting Zones by Using the Alias Search.....64
4.8.3 Selecting a Call Type.....65
4.8.4 Selecting a Site.....65
4.8.5 Roam Request.....65
4.8.6 Site Lock On/Off..... 66
4.8.7 Site Restriction.....66
4.8.8 Site Trunking 67
4.9 Calls.....67
4.9.1 Group Calls.....68
4.9.1.1 Making Group Calls..... 68
4.9.1.2 Making Group Calls by Using the Contacts List..... 69
4.9.1.3 Making Group Calls by Using the Programmable Number Key 70
4.9.1.4 Making Group Calls by Using the Alias Search 71
4.9.1.5 Responding to Group Calls..... 73
4.9.2 Broadcast Call 74
4.9.2.1 Making Broadcast Calls .. 74
4.9.2.2 Making Broadcast Calls Using the Contact List 75
4.9.2.3 Making Broadcast Calls Using the Programmable Number Key..... 76
4.9.2.4 Receiving Broadcast Calls 76
4.9.3 Private Call..... 77
4.9.3.1 Making Private Calls..... 77
4.9.3.2 Making Private Calls by Using the Programmable Number Key 78
4.9.3.3 Making Private Calls by Using the Alias Search 79

4.9.3.4 Making a Private Call with a One Touch Call Button 81
4.9.3.5 Making Private Calls by Using the Manual Dial..... 81
4.9.3.6 Receiving Private Calls.... 82
4.9.3.7 Accepting Private Calls ... 83
4.9.3.8 Declining Private Calls 83
4.9.4 All Calls 84
4.9.4.1 Making All Calls 84
4.9.4.2 Making All Calls by Using the Programmable Number Key 85
4.9.4.3 Making All Calls by Using the Alias Search..... 85
4.9.4.4 Receiving All Calls 87
4.9.5 Phone Calls..... 88
4.9.5.1 Making Phone Calls..... 88
4.9.5.2 Making Phone Calls with the Programmable Button 89
4.9.5.3 Making Phone Calls by Using the Contacts List 91
4.9.5.4 Making Phone Calls by Using the Alias Search..... 94
4.9.5.5 Making Phone Calls by Using the Manual Dial..... 96
4.9.5.6 Dual Tone Multi Frequency..... 99
4.9.5.6.1 Initiating DTMF Tone..... 99
4.9.5.7 Responding to Phone Calls as All Calls..... 99
4.9.5.8 Responding to Phone Calls as Group Calls..... 100
4.9.5.9 Responding to Phone Calls as Private Calls..... 100
4.9.6 Initiating Transmit Interrupt..... 101
4.9.7 Call Preemption..... 101
4.9.8 Voice Interrupt..... 102
4.9.8.1 Enabling Voice Interrupt. 102
4.10 Advanced Features..... 103
4.10.1 Call Queue..... 103
4.10.2 Priority Call..... 103
4.10.3 Talkgroup Scan 104
4.10.3.1 Turning Talkgroup Scan On or Off..... 104
4.10.4 Receive Group List..... 105

4.10.5 Priority Monitor.....105
4.10.5.1 Editing Priority for a Talkgroup..... 106
4.10.6 Multi-Talkgroup Affiliation..... 107
4.10.6.1 Adding Talkgroup Affiliation..... 107
4.10.6.2 Removing Talkgroup Affiliation..... 108
4.10.7 Talkback 109
4.10.8 Bluetooth®..... 109
4.10.8.1 Turning Bluetooth On and Off..... 110
4.10.8.2 Connecting to Bluetooth Devices..... 111
4.10.8.3 Connecting to Bluetooth Devices in Discoverable Mode..... 112
4.10.8.4 Disconnecting from Bluetooth Devices..... 112
4.10.8.5 Switching Audio Route between Internal Radio Speaker and Bluetooth Device.....113
4.10.8.6 Viewing Device Details 113
4.10.8.7 Deleting Device Name. 114
4.10.8.8 Bluetooth Mic Gain.....114
4.10.9 Indoor Location..... 115
4.10.9.1 Turning Indoor Location On or Off..... 115
4.10.9.2 Accessing Indoor Location Beacons Information... 117
4.10.10 Multi-Site Controls..... 117
4.10.10.1 Enabling Manual Site Search.....117
4.10.10.2 Site Lock On/Off.....117
4.10.10.3 Accessing Neighbor Sites List..... 118
4.10.11 Home Channel Reminder..... 118
4.10.11.1 Muting the Home Channel Reminder..... 118
4.10.11.2 Setting New Home Channels.....119
4.10.12 Remote Monitor..... 119
4.10.12.1 Initiating Remote Monitor..... 120

4.10.12.2 Initiating Remote Monitor by Using the Contacts List 120
4.10.12.3 Initiating Remote Monitors by Using the Manual Dial.....121
4.10.13 Contacts Settings.....122
4.10.13.1 Assigning Entries to Programmable Number Keys 123
4.10.13.2 Removing Associations Between Entries and Programmable Number Keys 124
4.10.13.3 Adding New Contacts 125
4.10.14 Call Indicator Settings.....126
4.10.14.1 Activating or Deactivating Call Ringers for Private Calls.....126
4.10.14.2 Activating or Deactivating Call Ringers for Text Messages 126
4.10.14.3 Activating or Deactivating Call Ringers for Call Alerts.....127
4.10.14.4 Activating or Deactivating Call Ringers for Selective Calls..... 128
4.10.14.5 Activating or Deactivating Call Ringers for Telemetry Status with Text..... 128
4.10.14.6 Assigning Ring Styles 129
4.10.14.7 Escalating Alarm Tone Volume.....130
4.10.15 Call Log Features 130
4.10.15.1 Viewing Recent Calls. 130
4.10.15.2 Storing Aliases or IDs from the Call List..... 131
4.10.15.3 Deleting Calls from the Call List..... 131
4.10.15.4 Deleting All Calls from the Call List 132
4.10.15.5 Viewing Details from the Call List..... 133
4.10.16 Call Alert Operation..... 133
4.10.16.1 Making Call Alerts..... 134

4.10.16.2 Making Call Alerts by Using the Contacts List..... 134
4.10.16.3 Responding to Call Alerts 135
4.10.17 Dynamic Caller Alias..... 135
4.10.17.1 Viewing the Caller Aliases List..... 135
4.10.17.2 Initiating Private Call From the Caller Aliases List..... 136
4.10.18 Mute Mode..... 136
4.10.18.1 Turning On Mute Mode..... 137
4.10.18.2 Setting Mute Mode Timer..... 137
4.10.18.3 Exiting Mute Mode..... 138
4.10.19 Emergency Operation..... 138
4.10.19.1 Sending Emergency Alarms..... 139
4.10.19.2 Sending Emergency Alarms with Call..... 140
4.10.19.3 Sending Emergency Alarms with Voice to Follow..... 142
4.10.19.4 Receiving Emergency Alarms 143
4.10.19.5 Responding to Emergency Alarms 144
4.10.19.6 Responding to Emergency Alarms with Call..... 145
4.10.19.7 Exiting Emergency Mode..... 146
4.10.20 Status Message..... 146
4.10.20.1 Sending Status Messages..... 147
4.10.20.2 Sending Status Message by Using Programmable Button..... 148
4.10.20.3 Sending a Status Message by Using the Contacts List..... 148
4.10.20.4 Sending Status Message by Using Manual Dial. 149
4.10.20.5 Viewing Status Messages..... 150
4.10.20.6 Responding to Status Messages..... 150

4.10.20.7 Deleting a Status Message..... 151
4.10.20.8 Deleting All Status Messages 152
4.10.21 Text Messaging 152
4.10.21.1 Text Messages.....153
4.10.21.1.1 Viewing Text Messages.....153
4.10.21.1.2 Viewing Telemetry Status Text Messages.....153
4.10.21.1.3 Responding to Text Messages.....154
4.10.21.1.4 Responding to Text Messages with Quick Text..... 155
4.10.21.1.5 Resending Text Messages.....156
4.10.21.1.6 Forwarding Text Messages.....156
4.10.21.1.7 Forwarding Text Messages by Using the Manual Dial..... 157
4.10.21.1.8 Editing Text Messages.....157
4.10.21.1.9 Writing Text Messages.....158
4.10.21.1.10 Sending Text Messages.....159
4.10.21.1.11 Deleting Text Messages from the Inbox..... 160
4.10.21.1.12 Deleting All Text Messages from the Inbox..... 160
4.10.21.2 Sent Text Messages.. 161
4.10.21.2.1 Viewing Sent Text Messages.....162
4.10.21.2.2 Sending Sent Text Messages.....162
4.10.21.2.3 Deleting Sent Text Messages from the Sent Items Folder.....163
4.10.21.2.4 Deleting All Sent Text Messages from the Sent Items Folder 163

4.10.21.3 Saved Text Messages 164
4.10.21.3.1 Viewing Saved Text Messages.....164
4.10.21.3.2 Editing Saved Text Messages.....165
4.10.21.3.3 Deleting Saved Text Messages from the Drafts Folder..... 165
4.10.21.4 Quick Text Messages 166
4.10.21.4.1 Sending Quick Text Messages 166
4.10.22 Text Entry Configuration..... 167
4.10.22.1 Enabling or Disabling Word Correct.....168
4.10.22.2 Enabling or Disabling Word Predict..... 168
4.10.22.3 Sentence Cap..... 169
4.10.22.4 Viewing Custom Words.....170
4.10.22.5 Editing Custom Words 170
4.10.22.6 Adding Custom Words 171
4.10.22.7 Deleting a Custom Word..... 172
4.10.22.8 Deleting All Custom Words.....173
4.10.23 Job Tickets.....174
4.10.23.1 Accessing the Job Ticket Folder..... 175
4.10.23.2 Logging In or Out of the Remote Server.....175
4.10.23.3 Creating Job Tickets.. 176
4.10.23.4 Responding to Job Tickets.....176
4.10.23.5 Sending Job Tickets Using One Job Ticket Template.177
4.10.23.6 Sending Job Tickets Using More Than One Job Ticket Template..... 178
4.10.23.7 Deleting Job Tickets...178
4.10.23.8 Deleting All Job Tickets.....179
4.10.24 Privacy..... 180

4.10.24.1 Turning Privacy On or Off..... 181
4.10.25 Response Inhibit..... 181
4.10.25.1 Turning Response Inhibit On or Off.....182
4.10.26 Stun/Revive..... 182
4.10.26.1 Stunning a Radio..... 183
4.10.26.2 Stunning a Radio by Using the Contacts List 183
4.10.26.3 Stunning a Radio by Using the Manual Dial.....184
4.10.26.4 Reviving a Radio.....185
4.10.26.5 Reviving a Radio by Using the Contacts List..... 185
4.10.26.6 Reviving a Radio by Using the Manual Dial.....186
4.10.27 Radio Kill.....187
4.10.28 Lone Worker..... 187
4.10.29 Password Lock..... 187
4.10.29.1 Accessing the Radio by Using Password..... 188
4.10.29.2 Unlocking Radios in Locked State..... 188
4.10.29.3 Turning Password Lock On or Off.....189
4.10.29.4 Changing Passwords. 190
4.10.30 Notification List 191
4.10.30.1 Accessing Notification List 191
4.10.31 Over-the-Air Programming 191
4.10.32 Selecting Third-Party Peripherals Connection Modes.....192
4.10.33 Received Signal Strength Indicator..... 193
4.10.33.1 Viewing RSSI Values. 193
4.10.34 Front Panel Configuration.....193
4.10.34.1 Entering Front Panel Configuration Mode.....194
4.10.34.2 Editing FPP Mode Parameters..... 194
4.10.35 Wi-Fi Operation.....194
4.10.35.1 Turning Wi-Fi On or Off..... 195
4.10.35.2 Turning Wi-Fi On or Off Remotely by Using a

Designated Radio (Individual Control)..... 196
4.10.35.3 Turning Wi-Fi On or Off Remotely by Using a Designated Radio (Group Control)..... 196
4.10.35.4 Connecting to a Network Access Point..... 197
4.10.35.5 Checking Wi-Fi Connection Status.....198
4.10.35.6 Refreshing the Network List..... 199
4.10.35.7 Adding a Network.....199
4.10.35.8 Viewing Details of Network Access Points..... 200
4.10.35.9 Removing Network Access Points..... 201
4.10.36 Dynamic Group Number Assignment (DGNA)..... 202
4.10.36.1 Making DGNA Calls... 203
4.10.36.2 Making Non-DGNA Calls..... 203
4.10.36.3 Receiving and Responding to DGNA Calls..... 203
4.11 Utilities..... 204
4.11.1 Power Levels..... 204
4.11.1.1 Setting Power Levels... 204
4.11.2 Turning Radio Tones/Alerts On or Off.....205
4.11.3 Turning Keypad Tones On or Off.....206
4.11.4 Setting Tones/Alerts Volume Offset Levels.....206
4.11.5 Turning Talk Permit Tone On or Off.....207
4.11.6 Turning Power Up Tone On or Off.....208
4.11.7 Setting Text Message Alert Tones.....208
4.11.8 Changing Display Modes.....209
4.11.9 Adjusting Display Brightness..... 209
4.11.10 Turning Horns/Lights On or Off 210
4.11.11 Turning LED Indicators On or Off.....211
4.11.12 Turning Public Address System On or Off.....211

4.11.13 Turning External Public Address System On or Off.....212
4.11.14 Turning Introduction Screen On or Off.....213
4.11.15 Setting Languages.....213
4.11.16 Identifying Cable Type.....214
4.11.17 Turning Voice Announcement On or Off 214
4.11.18 Turning Option Board On or Off.....215
4.11.19 Text-to-Speech.....215
4.11.19.1 Setting Text-to-Speech.....215
4.11.20 Setting Menu Timer.....216
4.11.21 Turning Digital Microphone AGC On or Off 217
4.11.22 Turning Intelligent Audio On or Off.....217
4.11.23 Turning the Acoustic Feedback Suppressor Feature On or Off.....218
4.11.24 Turning Trill Enhancement On or Off.....219
4.11.25 Audio Ambience.....219
4.11.25.1 Setting Audio Ambience.....220
4.11.26 Audio Profiles.....220
4.11.26.1 Setting Audio Profiles.221
4.11.27 Turning Global Navigation Satellite System On or Off.....222
4.11.28 General Radio Information 222
4.11.28.1 Checking Radio Alias and ID 223
4.11.28.2 Checking Firmware and Codeplug Versions.....223
4.11.28.3 Checking Software Update Information.....224
4.11.28.4 Checking GNSS Information.....224
4.11.28.5 Displaying Site Information.....225
4.11.29 Viewing Enterprise Wi-Fi Certificate Details.....225
Part II: Connect Plus.....227
5.1 Additional Radio Controls in Connect Plus Mode.....227
5.1.1 Push-To-Talk (PTT) Button.....227

5.1.2 Programmable Buttons..... 227
5.1.2.1 Assignable Radio Functions..... 228
5.1.2.2 Assignable Settings or Utility Functions.....229
5.1.3 Identifying Status Indicators in Connect Plus Mode..... 230
5.1.3.1 Display Icons.....230
5.1.3.2 Call Icons..... 233
5.1.3.3 Advanced Menu Icons... 233
5.1.3.4 Sent Item Icons 234
5.1.3.5 Bluetooth Device Icons.. 235
5.1.3.6 LED Indicator..... 235
5.1.3.7 Indicator Tones..... 236
5.1.3.8 Alert Tones.....236
5.1.4 Switching Between Connect Plus and Non-Connect Plus Modes.....237
5.2 Making and Receiving Calls in Connect Plus Mode.....237
5.2.1 Selecting a Site.....237
5.2.1.1 Roam Request..... 237
5.2.1.2 Site Lock On/Off.....238
5.2.1.3 Site Restriction.....238
5.2.2 Selecting a Zone.....238
5.2.3 Using Multiple Networks..... 239
5.2.4 Selecting a Call Type.....239
5.2.5 Receiving and Responding to a Radio Call..... 240
5.2.5.1 Receiving and Responding to a Group Call.....240
5.2.5.2 Receiving and Responding to a Private Call..... 241
5.2.5.3 Receiving a Site All Call.242
5.2.5.4 Receiving an Inbound Private Phone Call..... 242
5.2.5.4.1 Making a Buffered Over-Dial in an Inbound Phone Private Call..... 243
5.2.5.4.2 Making a Live Over-Dial in an Inbound Phone Private Call..... 243
5.2.5.5 Receiving an Inbound Phone Talkgroup Call..... 244
5.2.5.6 Inbound Phone Multi-Group Call.....244

5.2.6 Making a Radio Call.....244
5.2.6.1 Making a Call with the Channel Selector Knob..... 244
5.2.6.1.1 Making a Group Call..... 245
5.2.6.1.2 Making a Private Call.....245
5.2.6.1.3 Making a Site All Call..... 246
5.2.6.1.4 Making a Multi-group Call.....247
5.2.6.2 Making a Private Call with a One Touch Call Button.... 247
5.2.6.3 Making a Call with the Programmable Manual Dial Button.....248
5.2.6.3.1 Making a Private Call.....248
5.2.6.4 Making an Outbound Private Phone Call with the Programmable Manual Dial Button.....249
5.2.6.5 Making an Outbound Private Phone Call via the Phone Menu.....249
5.2.6.6 Making an Outbound Private Phone Call from Contacts.....250
5.2.6.7 Waiting for the Channel Grant in an Outbound Private Phone Call..... 252
5.2.6.8 Making a Buffered Over-Dial in a Connected Outbound Private Phone Call..... 252
5.2.6.9 Making a Live Over-Dial in a Connected Outbound Private Phone Call..... 253
5.3 Advanced Features in Connect Plus Mode 253
5.3.1 Home Channel Reminder..... 253
5.3.2 Auto Fallback.....254
5.3.2.1 Indications of Auto Fallback Mode.....254
5.3.2.2 Making/Receiving Calls in Fallback Mode.....255

5.3.2.3 Returning to Normal Operation..... 256
5.3.3 Radio Check..... 256
5.3.3.1 Sending a Radio Check. 256
5.3.4 Remote Monitor..... 257
5.3.4.1 Initiating Remote Monitor 258
5.3.5 Scan.....259
5.3.5.1 Starting and Stopping Scan.....259
5.3.5.2 Responding to a Transmission During a Scan.....260
5.3.6 User Configurable Scan.....260
5.3.7 Turning Scan On or Off.....261
5.3.8 Editing the Scan List..... 262
5.3.9 Add or Delete a Group via the Add Members Menu..... 263
5.3.10 Understanding Scan Operation. 265
5.3.11 Scan Talkback..... 265
5.3.12 Editing Priority for a Talkgroup.. 266
5.3.13 Contacts Settings.....267
5.3.13.1 Making a Private Call from Contacts.....268
5.3.13.2 Making a Call Alias Search.....268
5.3.13.3 Adding a New Contact. 269
5.3.14 Call Indicator Settings.....270
5.3.14.1 Activating and Deactivating Call Ringers for Call Alert..... 270
5.3.14.2 Activating and Deactivating Call Ringers for Private Calls.....271
5.3.14.3 Activating and Deactivating Call Ringers for Text Message..... 271
5.3.14.4 Selecting a Ring Alert Type..... 272
5.3.14.5 Escalating Alarm Tone Volume.....273
5.3.15 Call Log.....273
5.3.15.1 Viewing Recent Calls... 273
5.3.15.2 Deleting a Call from a Call List..... 274
5.3.15.3 Viewing Details from a Call List..... 274
5.3.16 Call Alert Operation..... 275

5.3.16.1 Responding to Call Alerts 275
5.3.16.2 Making a Call Alert from the Contact List..... 275
5.3.16.3 Making a Call Alert with the One Touch Access Button... 276
5.3.17 Mute Mode..... 277
5.3.17.1 Turning On Mute Mode 277
5.3.17.2 Setting Mute Mode Timer..... 277
5.3.17.3 Exiting Mute Mode..... 278
5.3.18 Emergency Operation..... 279
5.3.18.1 Receiving an Incoming Emergency..... 280
5.3.18.2 Saving the Emergency Details to the Alarm List..... 281
5.3.18.3 Deleting the Emergency Details..... 281
5.3.18.4 Responding to an Emergency Call..... 282
5.3.18.5 Responding to an Emergency Alert..... 282
5.3.18.6 Ignore Emergency Revert Call..... 283
5.3.18.7 Initiating an Emergency Call..... 283
5.3.18.8 Initiating an Emergency Call with Voice to Follow..... 284
5.3.18.9 Initiating an Emergency Alert..... 284
5.3.18.10 Exiting Emergency Mode..... 285
5.3.19 Text Messaging 285
5.3.19.1 Sending a Quick Text Message..... 286
5.3.19.2 Sending Quick Text Messages with the One Touch Access Button..... 286
5.3.19.3 Accessing the Drafts Folder..... 287
5.3.19.3.1 Viewing a Saved Text Message..... 287
5.3.19.3.2 Editing and Sending a Saved Text Message..... 288

5.3.19.3.3 Deleting a Saved Text Message from Drafts..... 289
5.3.19.4 Managing Fail-to-Send Text Messages.....289
5.3.19.4.1 Resending a Text Message.....290
5.3.19.4.2 Forwarding a Text Message.....290
5.3.19.5 Managing Sent Text Messages.....290
5.3.19.5.1 Viewing a Sent Text Message.....291
5.3.19.5.2 Sending a Sent Text Message..... 291
5.3.19.5.3 Deleting All Sent Text Messages from Sent Items..... 293
5.3.19.6 Receiving a Text Message..... 294
5.3.19.7 Reading a Text Message..... 294
5.3.19.8 Managing Received Text Messages.....294
5.3.19.8.1 Viewing a Text Message from the Inbox..295
5.3.19.8.2 Replying to a Text Message from the Inbox..... 295
5.3.19.8.3 Deleting a Text Message from the Inbox..296
5.3.19.8.4 Deleting All Text Messages from the Inbox..... 297
5.3.20 Privacy..... 298
5.3.20.1 Making a Privacy-Enabled (Scrambled) Call..... 299
5.3.21 Security.....300
5.3.21.1 Radio Disable.....300
5.3.21.2 Radio Enable..... 302
5.3.22 Bluetooth Operation.....303
5.3.22.1 Turning Bluetooth On and Off..... 304
5.3.22.2 Finding and Connecting to a Bluetooth Device.....305
5.3.22.3 Finding and Connecting from a Bluetooth Device (Discoverable Mode).....306

5.3.22.4 Disconnecting from a Bluetooth Device.....306
5.3.22.5 Switching Audio Route between Internal Radio Speaker and Bluetooth Device.....307
5.3.22.6 Viewing Device Details 307
5.3.22.7 Deleting Device Name. 308
5.3.22.8 Bluetooth Mic Gain.....308
5.3.23 Indoor Location..... 309
5.3.23.1 Turning Indoor Location On or Off..... 309
5.3.23.2 Accessing Indoor Location Beacons Information... 310
5.3.24 Notification List..... 311
5.3.24.1 Accessing the Notification List.....311
5.3.25 Wi-Fi Operation.....311
5.3.25.1 Turning Wi-Fi On or Off312
5.3.25.2 Turning Wi-Fi On or Off Remotely by Using a Designated Radio (Individual Control)..... 313
5.3.25.3 Turning Wi-Fi On or Off Remotely by Using a Designated Radio (Group Control)..... 314
5.3.25.4 Connecting to a Network Access Point..... 314
5.3.25.5 Checking Wi-Fi Connection Status.....315
5.3.25.6 Refreshing the Network List..... 316
5.3.25.7 Adding a Network.....317
5.3.25.8 Viewing Details of Network Access Points..... 317
5.3.25.9 Removing Network Access Points..... 318
5.3.26 Utilities..... 319
5.3.26.1 Turning the Radio Tones/Alerts On or Off..... 319
5.3.26.2 Setting the Tone Alert Volume Offset Level.....320
5.3.26.3 Turning the Talk Permit Tone On or Off..... 321
5.3.26.4 Turning the Power Up Alert Tone On or Off.....321

5.3.26.5 Setting the Power Level 322
5.3.26.6 Changing the Display Mode..... 323
5.3.26.7 Adjusting the Display Brightness..... 323
5.3.26.8 Turning the Introduction Screen On or Off..... 324
5.3.26.9 Language..... 325
5.3.26.10 Turning the LED Indicator On or Off..... 325
5.3.26.11 Identifying Cable Type 326
5.3.26.12 Voice Announcement. 326
5.3.26.13 Menu Timer..... 327
5.3.26.14 Turning Horns/Lights On or Off..... 327
5.3.26.15 Setting Dual Knob Operation Preference..... 328
5.3.26.16 Digital Mic AGC (Mic AGC-D)..... 329
5.3.26.17 Intelligent Audio..... 329
5.3.26.18 Turning the Acoustic Feedback Suppressor Feature On or Off..... 331
5.3.26.19 Turning GNSS On or Off..... 331
5.3.26.20 Accessing General Radio Information..... 332
5.3.26.20.1 Checking the Radio Model Number Index..... 333
5.3.26.20.2 Checking the CRC of the Option Board OTA Codeplug File..... 333
5.3.26.20.3 Displaying the Site ID (Site Number) 334
5.3.26.20.4 Checking the Site Info..... 334
5.3.26.20.5 Checking the Radio ID..... 335
5.3.26.20.6 Checking the Firmware Version and Codeplug Version..... 336
5.3.26.20.7 Checking for Updates..... 336

5.3.26.21 Viewing Enterprise Wi-Fi Certificate Details..... 344
Part III: Other Systems..... 345
6.1 Push-To-Talk Button.....345
6.2 Programmable Buttons.....345
6.2.1 Assignable Radio Functions..... 346
6.2.2 Assignable Settings or Utility Functions..... 348
6.2.3 Accessing Programmed Functions..... 349
6.3 Status Indicators.....349
6.3.1 Icons..... 350
6.3.2 LED Indicators 356
6.3.3 Tones.....357
6.3.3.1 Indicator Tones..... 358
6.3.3.2 Audio Tones.....358
6.4 Conventional Analog and Digital Modes....358
6.5 Icon Information.....359
6.6 IP Site Connect.....359
6.7 Capacity Plus–Single-Site 360
6.8 Capacity Plus–Multi-Site 360
6.9 Zone and Channel Selections..... 361
6.9.1 Selecting Zones 362
6.9.2 Selecting Zones by Using the Alias Search.....362
6.9.3 Selecting Channels.....363
6.10 Calls.....363
6.10.1 Group Calls.....364
6.10.1.1 Making Group Calls..... 364
6.10.1.2 Making Group Calls by Using the Contacts List 365
6.10.1.3 Making Group Calls by Using the Programmable Number Key 366
6.10.1.4 Responding to Group Calls..... 367
6.10.2 Private Calls 368
6.10.2.1 Making Private Calls 368
6.10.2.2 Making Private Calls by Using the Contacts List 369
6.10.2.3 Making Private Calls by Using the Manual Dial 369

6.10.2.4 Making Private Calls by Using the Programmable Number Key 370
6.10.2.5 Responding to Private Calls 371
6.10.3 All Calls.....372
6.10.3.1 Receiving All Calls..... 372
6.10.3.2 Making All Calls..... 373
6.10.3.3 Making All Calls by Using the Programmable Number Key 373
6.10.4 Selective Calls 374
6.10.4.1 Making Selective Calls.374
6.10.4.2 Responding to Selective Calls 375
6.10.5 Phone Calls 375
6.10.5.1 Making Phone Calls 376
6.10.5.2 Making Phone Calls by Using the Contacts List 377
6.10.5.3 Making Phone Calls by Using the Manual Dial 379
6.10.5.4 Making Group, Private, Phone or All Calls by Using the Alias Search 382
6.10.5.5 Dual Tone Multi Frequency..... 384
6.10.5.5.1 Initiating DTMF Tone..... 384
6.10.5.6 Responding to Phone Calls as Group Calls 384
6.10.5.7 Responding to Phone Calls as All Calls 385
6.10.5.8 Responding to Phone Calls as Private Calls 385
6.10.6 Initiating Transmit Interrupt ...386
6.10.7 Talkaround.....386
6.10.7.1 Toggling Between Repeater and Talkaround Modes..... 387
6.10.8 Broadcast Voice Calls.....387
6.10.8.1 Making Broadcast Voice Calls..... 388

6.10.8.2 Making Broadcast Voice Calls by Using the Programmable Number Key . 388
6.10.8.3 Making Broadcast Voice Calls by Using the Alias Search 388
6.10.8.4 Receiving Broadcast Voice Calls..... 390
6.10.9 Unaddressed Calls..... 391
6.10.9.1 Making Unaddressed Calls..... 391
6.10.9.2 Responding to Unaddressed Calls.....392
6.10.10 Open Voice Channel Mode (OVCM).....393
6.10.10.1 Making OVCM Calls...393
6.10.10.2 Responding to OVCM Calls..... 393
6.11 Advanced Features..... 394
6.11.1 Home Channel Reminder..... 394
6.11.1.1 Muting the Home Channel Reminder..... 395
6.11.1.2 Setting New Home Channels.....395
6.11.2 Radio Check 395
6.11.2.1 Sending Radio Checks 396
6.11.2.2 Sending Radio Checks by Using the Manual Dial 396
6.11.3 Remote Monitor..... 397
6.11.3.1 Initiating Remote Monitor..... 398
6.11.3.2 Initiating Remote Monitor by Using the Contacts List 399
6.11.3.3 Initiating Remote Monitor by Using the Manual Dial 400
6.11.4 Scan Lists..... 401
6.11.4.1 Viewing Entries in the Scan List 401
6.11.4.2 Viewing Entries in the Scan List by Using the Alias Search 402

6.11.4.3 Adding New Entries to the Scan List..... 402
6.11.4.4 Adding New Entries to the Scan List by Using the Alias Search 403
6.11.4.5 Deleting Entries from the Scan List..... 404
6.11.4.6 Setting Priority for Entries in the Scan List..... 405
6.11.5 Scan.....406
6.11.5.1 Turning Scan On or Off 406
6.11.5.2 Responding to Transmissions During Scanning 407
6.11.5.3 Deleting Nuisance Channels.....407
6.11.5.4 Restoring Nuisance Channels.....408
6.11.6 Vote Scan 408
6.11.7 Contacts Settings.....408
6.11.7.1 Making Group Calls by Using the Contacts List 409
6.11.7.2 Making Private Calls by Using the Contacts List 410
6.11.7.3 Assigning Entries to Programmable Number Keys 411
6.11.7.4 Removing Associations Between Entries and Programmable Number Keys 412
6.11.7.5 Adding New Contacts . 413
6.11.7.6 Setting Default Contact 413
6.11.8 Call Indicator Settings.....414
6.11.8.1 Activating or Deactivating Call Ringers for Call Alerts.....414
6.11.8.2 Activating or Deactivating Call Ringers for Private Calls 415
6.11.8.3 Activating or Deactivating Call Ringers for Selective Calls 415

6.11.8.4 Activating or Deactivating Call Ringers for Text Messages 416
6.11.8.5 Activating or Deactivating Call Ringers for Telemetry Status with Text..... 417
6.11.8.6 Assigning Ring Styles.. 417
6.11.8.7 Escalating Alarm Tone Volume.....418
6.11.9 Call Log Features 418
6.11.9.1 Viewing Recent Calls... 419
6.11.9.2 Deleting Calls from the Call List 419
6.11.9.3 Viewing Call List Details 420
6.11.9.4 Storing Aliases or IDs from the Call List 420
6.11.10 Call Alert Operation..... 421
6.11.10.1 Making Call Alerts..... 421
6.11.10.2 Making Call Alerts by Using the Contacts List..... 422
6.11.10.3 Making Call Alerts by Using the Manual Dial.....422
6.11.10.4 Responding to Call Alerts 423
6.11.11 Dynamic Caller Alias.....424
6.11.11.1 Viewing the Caller Aliases List.....424
6.11.11.2 Initiating Private Call From the Caller Aliases List..... 424
6.11.12 Mute Mode.....425
6.11.12.1 Turning On Mute Mode..... 425
6.11.12.2 Setting Mute Mode Timer.....425
6.11.12.3 Exiting Mute Mode..... 426
6.11.13 Emergency Operation 427
6.11.13.1 Receiving Emergency Alarms.....428
6.11.13.2 Responding to Emergency Alarms.....429
6.11.13.3 Exiting Emergency Mode After Receiving the Emergency Alarm..... 430
6.11.13.4 Sending Emergency Alarms 430

6.11.13.5 Sending Emergency Alarms with Call 431
6.11.13.6 Emergency Alarms with Voice to Follow 432
6.11.13.7 Sending Emergency Alarms with Voice to Follow ..433
6.11.13.8 Reinitiating Emergency Mode.....433
6.11.13.9 Exiting Emergency Mode After Sending the Emergency Alarm..... 434
6.11.13.10 Deleting an Alarm Item from the Alarm List.....434
6.11.14 Text Messaging 435
6.11.14.1 Text Messages 435
6.11.14.1.1 Viewing Text Messages.....435
6.11.14.1.2 Viewing Telemetry Status Text Messages.....436
6.11.14.1.3 Responding to Text Messages 436
6.11.14.1.4 Responding to Text Messages with Quick Text 437
6.11.14.1.5 Resending Text Messages.....438
6.11.14.1.6 Forwarding Text Messages 439
6.11.14.1.7 Forwarding Text Messages by Using the Manual Dial 439
6.11.14.1.8 Editing Text Messages.....440
6.11.14.1.9 Writing Text Messages.....441
6.11.14.1.10 Sending Text Messages.....442
6.11.14.1.11 Deleting Text Messages from the Inbox..... 442
6.11.14.1.12 Deleting All Text Messages from the Inbox 443
6.11.14.2 Sent Text Messages 444

6.11.14.2.1 Viewing Sent Text Messages 444
6.11.14.2.2 Sending Sent Text Messages 445
6.11.14.2.3 Deleting Sent Text Messages from the Sent Items Folder 446
6.11.14.2.4 Deleting All Sent Text Messages from the Sent Items Folder 446
6.11.14.3 Saved Text Messages 447
6.11.14.3.1 Viewing Saved Text Messages.....447
6.11.14.3.2 Editing Saved Text Messages.....448
6.11.14.3.3 Deleting Saved Text Messages from the Drafts Folder..... 448
6.11.14.4 Quick Text Messages 449
6.11.14.4.1 Sending Quick Text Messages 449
6.11.15 Text Entry Configuration.....450
6.11.15.1 Enabling or Disabling Word Correct.....450
6.11.15.2 Enabling or Disabling Word Predict..... 451
6.11.15.3 Sentence Cap..... 452
6.11.15.4 Viewing Custom Words.....452
6.11.15.5 Editing Custom Words 453
6.11.15.6 Adding Custom Words 454
6.11.15.7 Deleting a Custom Word..... 455
6.11.15.8 Deleting All Custom Words.....456
6.11.16 Job Tickets.....457
6.11.16.1 Accessing the Job Ticket Folder..... 458
6.11.16.2 Logging In or Out of the Remote Server.....458
6.11.16.3 Creating Job Tickets.. 459

6.11.16.4 Responding to Job Tickets.....459
6.11.16.5 Sending Job Tickets Using One Job Ticket Template.460
6.11.16.6 Sending Job Tickets Using More Than One Job Ticket Template..... 461
6.11.16.7 Deleting Job Tickets...461
6.11.16.8 Deleting All Job Tickets.....462
6.11.17 Privacy 463
6.11.17.1 Turning Privacy On or Off 464
6.11.18 Response Inhibit.....464
6.11.18.1 Turning Response Inhibit On or Off.....465
6.11.19 Multi-Site Control 465
6.11.19.1 Enabling Manual Site Search.....465
6.11.19.2 Site Lock On/Off.....466
6.11.19.3 Accessing Neighbor Sites List..... 466
6.11.20 Security 466
6.11.20.1 Disabling Radios ...467
6.11.20.2 Disabling Radios by Using the Contacts List 468
6.11.20.3 Disabling Radios by Using the Manual Dial 469
6.11.20.4 Enabling Radios 470
6.11.20.5 Enabling Radios by Using the Contacts List 470
6.11.20.6 Enabling Radios by Using the Manual Dial 471
6.11.21 Lone Worker..... 473
6.11.22 Bluetooth®..... 473
6.11.22.1 Turning Bluetooth On and Off..... 474
6.11.22.2 Connecting to Bluetooth Devices..... 474
6.11.22.3 Connecting to Bluetooth Devices in Discoverable Mode..... 476
6.11.22.4 Disconnecting from Bluetooth Devices..... 476

6.11.22.5 Switching Audio Route between Internal Radio Speaker and Bluetooth Device.. 477
6.11.22.6 Viewing Device Details..... 477
6.11.22.7 Deleting Device Name 478
6.11.22.8 Bluetooth Mic Gain.....478
6.11.23 Indoor Location..... 479
6.11.23.1 Turning Indoor Location On or Off.....479
6.11.23.2 Accessing Indoor Location Beacons Information... 481
6.11.24 Notification List 481
6.11.24.1 Accessing Notification List 481
6.11.25 Auto-Range Transponder System 482
6.11.26 Over-the-Air Programming . 482
6.11.27 Transmit Inhibit..... 483
6.11.27.1 Enabling Transmit Inhibit..... 483
6.11.27.2 Disabling Transmit Inhibit..... 484
6.11.28 Selecting Third-Party Peripherals Connection Modes.....484
6.11.29 Received Signal Strength Indicator..... 485
6.11.29.1 Viewing RSSI Values. 485
6.11.30 Password Lock..... 485
6.11.30.1 Accessing the Radio by Using Password..... 486
6.11.30.2 Unlocking Radios in Locked State..... 486
6.11.30.3 Turning Password Lock On or Off.....487
6.11.30.4 Changing Passwords. 488
6.11.31 Front Panel Configuration.....489
6.11.31.1 Entering Front Panel Configuration Mode.....489
6.11.31.2 Editing FPP Mode Parameters..... 489
6.11.32 Wi-Fi Operation.....489
6.11.32.1 Turning Wi-Fi On or Off..... 490

6.11.32.2 Turning Wi-Fi On or Off Remotely by Using a Designated Radio (Individual Control)..... 491
6.11.32.3 Turning Wi-Fi On or Off Remotely by Using a Designated Radio (Group Control)..... 492
6.11.32.4 Connecting to a Network Access Point..... 492
6.11.32.5 Checking Wi-Fi Connection Status.....493
6.11.32.6 Refreshing the Network List..... 494
6.11.32.7 Adding a Network.....495
6.11.32.8 Viewing Details of Network Access Points..... 495
6.11.32.9 Removing Network Access Points..... 496
6.12 Utilities..... 497
6.12.1 Squelch Levels 497
6.12.1.1 Setting Squelch Levels 497
6.12.2 Power Levels..... 498
6.12.2.1 Setting Power Levels... 498
6.12.3 Turning Radio Tones/Alerts On or Off.....499
6.12.4 Turning Keypad Tones On or Off..... 500
6.12.5 Setting Tones/Alerts Volume Offset Levels..... 500
6.12.6 Turning Talk Permit Tone On or Off..... 501
6.12.7 Turning Power Up Tone On or Off..... 502
6.12.8 Setting Text Message Alert Tones..... 502
6.12.9 Changing Display Modes..... 503
6.12.10 Adjusting Display Brightness... 504
6.12.11 Turning Horns/Lights On or Off 504
6.12.12 Turning LED Indicators On or Off..... 505
6.12.13 Turning Public Address System On or Off..... 506
6.12.14 Turning External Public Address System On or Off..... 506

6.12.15 Turning Introduction Screen On or Off..... 507
6.12.16 Setting Languages..... 508
6.12.17 Identifying Cable Type..... 508
6.12.18 Voice Operating Transmission. 509
6.12.18.1 Turning Voice Operating Transmission On or Off..... 509
6.12.19 Turning Voice Announcement On or Off 510
6.12.20 Turning Option Board On or Off..... 510
6.12.21 Text-to-Speech..... 510
6.12.21.1 Setting Text-to-Speech..... 511
6.12.22 Turning Automatic Call Forwarding On or Off..... 512
6.12.23 Setting Menu Timer..... 512
6.12.24 Turning Analog Microphone AGC On or Off 513
6.12.25 Turning Digital Microphone AGC On or Off 513
6.12.26 Turning Intelligent Audio On or Off..... 514
6.12.27 Turning the Acoustic Feedback Suppressor Feature On or Off..... 515
6.12.28 Turning Trill Enhancement On or Off..... 515
6.12.29 Audio Ambience..... 516
6.12.29.1 Setting Audio Ambience..... 516
6.12.30 Audio Profiles..... 517
6.12.30.1 Setting Audio Profiles. 517
6.12.31 Turning Global Navigation Satellite System On or Off..... 518
6.12.32 Flexible Receive List 519
6.12.32.1 Turning Flexible Receive List On or Off..... 519
6.12.33 General Radio Information 520
6.12.33.1 Checking Radio Alias and ID 520
6.12.33.2 Checking Firmware and Codeplug Versions..... 521
6.12.33.3 Checking Software Update Information..... 521

6.12.33.4 Checking GNSS Information..... 522
6.12.33.5 Displaying Site Information..... 522
6.12.34 Viewing Enterprise Wi-Fi Certificate Details.....523
Part IV: Authorized Accessories List..... 524

Important Safety Information

RF Energy Exposure and Product Safety Guide for Mobile Two-Way Radios

CAUTION:
This radio is restricted to Occupational use only.
Before using the radio, read the RF Energy Exposure and Product Safety Guide for Mobile Two-Way Radios which contains important operating instructions for safe usage and RF energy awareness and control for Compliance with applicable standards and Regulations.

For models that are available in Thailand:

อุปกรณ์โทรคมนาคมนี้ได้ปฏิบัติตามข้อกำหนดของคณะกรรมการกิจการโทรคมนาคมแห่งชาติ
This telecommunication equipment conforms to the requirements of the National Telecommunications Commission.

Software Version

All the features described in the following sections are supported by the software version **R02.21.01.0000** or later.

See Checking Firmware and Codeplug Versions on page 223 to determine the software version of your radio.

Contact your dealer or administrator for more information.

Copyrights

The Motorola Solutions products described in this document may include copyrighted Motorola Solutions computer programs. Laws in the United States and other countries preserve for Motorola Solutions certain exclusive rights for copyrighted computer programs. Accordingly, any copyrighted Motorola Solutions computer programs contained in the Motorola Solutions products described in this document may not be copied or reproduced in any manner without the express written permission of Motorola Solutions.

© 2021 Motorola Solutions, Inc. All Rights Reserved

No part of this document may be reproduced, transmitted, stored in a retrieval system, or translated into any language or computer language, in any form or by any means, without the prior written permission of Motorola Solutions, Inc.

Furthermore, the purchase of Motorola Solutions products shall not be deemed to grant either directly or by implication, estoppel or otherwise, any license under the copyrights, patents or patent applications of Motorola Solutions, except for the normal non-exclusive, royalty-free license to use that arises by operation of law in the sale of a product.

Disclaimer

Please note that certain features, facilities, and capabilities described in this document may not be applicable to or licensed for use on a specific system, or may be dependent upon the characteristics of a specific mobile subscriber unit or configuration of certain parameters. Please refer to your Motorola Solutions contact for further information.

Trademarks

MOTOROLA, MOTO, MOTOROLA SOLUTIONS, and the Stylized M Logo are trademarks or registered trademarks of Motorola Trademark Holdings, LLC and are used under license. All other trademarks are the property of their respective owners.

Open Source Content

This product contains Open Source software used under license. Refer to the product installation media for full Open Source Legal Notices and Attribution content.

European Union (EU) Waste of Electrical and Electronic Equipment (WEEE) directive

The European Union's WEEE directive requires that products sold into EU countries must have the crossed out trash bin label on the product (or the package in some cases).

As defined by the WEEE directive, this cross-out trash bin label means that customers and end-users in EU countries should not dispose of electronic and electrical equipment or accessories in household waste.

Customers or end-users in EU countries should contact their local equipment supplier representative or service centre for information about the waste collection system in their country.

Computer Software Copyrights

The Motorola Solutions products described in this manual may include copyrighted Motorola Solutions computer programs stored in semiconductor memories or other media. Laws in the United States and other countries preserve for Motorola Solutions certain exclusive rights for copyrighted computer programs including, but not limited to, the exclusive right to copy or reproduce in any form the copyrighted computer program. Accordingly, any copyrighted Motorola Solutions computer programs contained in the Motorola Solutions products described in this manual may not be copied, reproduced, modified, reverse-engineered, or distributed in any manner without the express written permission of Motorola Solutions. Furthermore, the purchase of Motorola Solutions products shall not be deemed to grant either directly or by implication, estoppel, or otherwise, any license under the copyrights, patents or patent applications of Motorola Solutions, except for the normal non-exclusive license to use that arises by operation of law in the sale of a product.

The AMBE+2™ voice coding Technology embodied in this product is protected by intellectual property rights including patent rights, copyrights and trade secrets of Digital Voice Systems, Inc.

This voice coding Technology is licensed solely for use within this Communications Equipment. The user of this Technology is explicitly prohibited from attempting to decompile, reverse engineer, or disassemble the Object Code, or in any other way convert the Object Code into a human-readable form.

U.S. Pat. Nos. #5,870,405, #5,826,222, #5,754,974, #5,701,390, #5,715,365, #5,649,050, #5,630,011, #5,581,656, #5,517,511, #5,491,772, #5,247,579, #5,226,084 and #5,195,166.

Radio Care

This section describes the basic handling precaution of the radio.

Table 1: IP Specification

IP Specification	Description
IP67	Allows your radio to withstand adverse field conditions such as being submersed in water.

CAUTION:
Do not disassemble your radio. This could damage radio seals and result in leak paths into the radio. Radio maintenance should only be done in service depot that is equipped to test and replace the seal on the radio.

- If your radio has been submersed in water, shake your radio well to remove any water that may be trapped inside the speaker grille and microphone port. Trapped water could cause decreased audio performance.
- If your radio's battery contact area has been exposed to water, clean and dry battery contacts on both your radio and the battery before attaching the battery to radio. The residual water could short-circuit the radio.
- If your radio has been submersed in a corrosive substance (for example, saltwater), rinse radio and battery in fresh water then dry radio and battery.
- To clean the exterior surfaces of your radio, use a diluted solution of mild dishwashing detergent and fresh water (for example, one teaspoon of detergent to one gallon of water).
- Never poke the vent (hole) located on the radio chassis below the battery contact. This vent allows for pressure equalization in the radio. Doing so may create a leak path into radio and your radio's submersibility may be lost.
- Never obstruct or cover the vent, even with a label.
- Ensure that no oily substances come in contact with the vent.
- Your radio with antenna attached properly is designed to be submersible to a maximum depth of 1 m (3.28 ft) and a maximum submersion time of 30 minutes. Exceeding either maximum limit or use without antenna may result in damage to your radio.

- When cleaning your radio, do not use a high pressure jet spray on radio as this will exceed the 1 m depth pressure and may cause water to leak into your radio.

Getting Started

Getting Started provides instructions to prepare your radio for use.

1.1 Turning the Radio On

Press the **On/Off** button.

If successful, your radio shows the following indications:

- A tone sounds.

  NOTICE:
  If the Tones/Alerts function is disabled, there is no tone upon powering up.

- The green LED lights up.
- The display shows `MOTOTRBO (TM)`, followed by a welcome message or image.
- The Home screen lights up.

If your radio does not power up, check your battery. Make sure that the battery is charged and properly attached. Contact your dealer if your radio still does not power up.

1.2 Turning the Radio Off

Press and hold the **On/Off** button.

The radio may take up to seven seconds to completely turn off.

The display shows `Powering Down`.

1.3 Adjusting the Volume

To adjust the volume of your radio, perform one of the following actions:

- To increase the volume, turn the **On/Off/Volume Control** knob clockwise.
- To decrease the volume, turn the **On/Off/Volume Control** knob counterclockwise.

NOTICE:
Your radio can be programmed to have a minimum volume offset where the volume level cannot be lowered past the programmed minimum volume.

Radio Controls

This chapter explains the buttons and functions to control the radio.

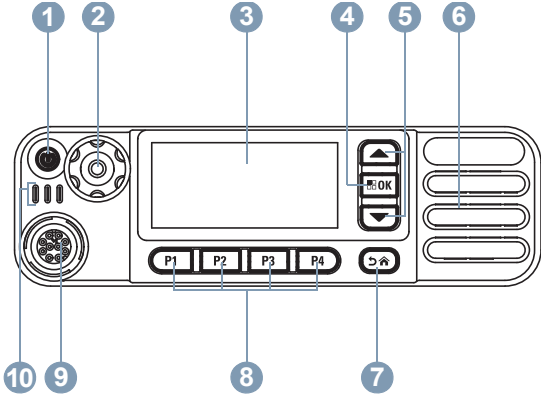

1 On/Off/Information Button

2 Volume/Channel Knob

3 Display

4 Menu/OK Button

5 Scroll Up/Down Buttons

6 Speaker

7 Return/Home Button

8 Front Programmable Buttons

9 Accessory Connector

10 LED Indicators

2.1

Volume/Channel Knob

The **Volume/Channel Knob** can be programmed for dual volume and channel control, or for volume control only.

To adjust the volume, see Adjusting the Volume on page 39.

To change the channels, press and hold the **Volume/Channel Knob** until the channel selection state is displayed. Turn the **Volume/Channel Knob** to select the channel. Do one of the following to exit the channel selection state:

- Press the **Volume/Channel Knob**.
- Press OK .
- Press .
- Wait for the menu timer to expire.

2.1.1

Setting Dual Knob Operation Preference

Follow the procedure to set the dual knob operation preference of the radio.

1 Press OK to access the menu.

2 Press ▲ or ▼ to `Utilities`. Press OK to select.

3 Press ▲ or ▼ to `Radio Settings`. Press OK to select.

4 Press ▲ or ▼ to `Dual Knob`. Press OK to select.

The display shows `Volume Only` and `Volume & Channel`.

5 Press ▲ or ▼ to the required setting. Press OK to select.

A ✓ appears beside the selected settings. The screen returns to the previous menu.

2.2

Keypad Microphone Buttons

You can use the 3 x 4 alphanumeric keypad on the 4-Way Navigation Keypad Microphone (Motorola Solutions part number RMN5127_) to access your radio features. Many characters require that you press a key multiple times. The table shows the number of times a key needs to be pressed to generate the required character.

Key	Number of Times Key is Pressed												
	1	2	3	4	5	6	7	8	9	10	11	12	13
1 ,.?	1	.	,	?	!	@	&	'	%	—	:	*	#
2 ABC	A	B	C	2									
DEF 3	D	E	F	3									
4 GHI	G	H	I	4									
5 JKL	J	K	L	5									

Key	Number of Times Key is Pressed												
	1	2	3	4	5	6	7	8	9	10	11	12	13
MNO 6	M	N	O	6									
7 PQRS	P	Q	R	S	7								
8 TUV	T	U	V	8									
WXYZ 9	W	X	Y	Z	9								
0	0	**NOTICE:** Press to enter "0" and long press to activate the CAPS lock. Another long press to turn off the CAPS lock.											
*	* or del	**NOTICE:** Press during text entry to delete the character. Press during numeric entry to enter a "*".											
#	# or space	**NOTICE:** Press during text entry to insert a space. Press during numeric entry to enter a "#".											

WAVE

Wide Area Voice Environment (WAVE™) provides a new method of making calls between two or more radios.

WAVE allows you to communicate across different networks and devices using Wi-Fi. WAVE calls are made when the radio is connected to an IP network through Wi-Fi.

Your radio supports different system configurations:

- WAVE OnCloud/OnPremise
- WAVE Tactical/5000

The method to initiate a WAVE Call is different for each system type. Refer to the appropriate section depending on the system configuration of your radio.

Table 2: WAVE Display Icons

The following icons appear momentarily on the display when WAVE is enabled.

	WAVE Connected WAVE is connected.
	WAVE Disconnected WAVE is disconnected.

NOTICE:
This feature is applicable to specific models only.

3.1 WAVE OnCloud/OnPremise

3.1.1 Switching from Radio Mode to WAVE Mode

1 Do one of the following:
   - Press the programmed **WAVE** button. Skip the following steps.
   - Press OK to access the menu.

2 Press ▲ or ▼ to WAVE. Press OK to select.

The yellow LED double blinks.

The display shows a momentary notice of `Switching to WAVE`, then shows `Preparing WAVE`.

NOTICE:
Your radio automatically enables Wi-Fi after you switch to WAVE mode.

If successful:

- The blinking yellow LED turns off.
- The display shows the WAVE connected icon, `<Talkgroup Alias>`, and `<Channel Index>`.

If unsuccessful:

- A negative tone sounds.
- The red LED blinks.
- The display shows the WAVE disconnected icon and `No Connection` or `Activation: Fail`, depending on the error type.

NOTICE:
Synchronization occurs when new settings are updated to your radio. When you enter the WAVE mode, your radio displays `Syncing...`. When the synchronization completes, your radio returns to the home screen.

3.1.2
Making WAVE Group Calls

1. Use the channel selector knob or buttons to select a WAVE talkgroup.
2. To call, press the **PTT** button.

If the call is successful, the display shows the Group Call icon and the WAVE talkgroup alias.

If the call is unsuccessful:

- A negative indicator tone sounds.
- The display shows a momentary notice of `Call Failed` or `No Participants`.

3.1.3
Receiving and Responding to WAVE Group Calls

When you receive a WAVE group call:

- A tone sounds.
- The display shows the group call icon, WAVE talkgroup alias, and caller alias.

- Your radio unmutes and the incoming call sounds through the speaker.

1 To call, press the **PTT** button.

2 To listen, release the **PTT** button.

3.1.4

Receiving and Responding to WAVE Private Calls

When you receive a WAVE private call:

- A tone sounds.
- The display shows the private call icon and caller alias.
- Your radio unmutes and the incoming call sounds through the speaker.

1 To call, press the **PTT** button.

2 To listen, release the **PTT** button.

3.1.5

Switching from WAVE Mode to Radio Mode

1 Do one of the following:

- Press the programmed **Radio Mode** button. Skip the following steps.
- Press OK to access the menu.

2 Press ▲ or ▼ to `Radio Mode`. Press OK to select.

The yellow LED double blinks.

The display shows a momentary notice of `Switching to Radio` and then shows `Preparing Radio`.

When successful:

- The blinking yellow LED turns off.
- The WAVE connected icon disappears on the status bar. The display shows `<Talkgroup Alias>` and `<Channel Index>`.

3.2
WAVE Tactical/5000

3.2.1
Setting Active WAVE Channels

NOTICE:
WAVE channels are configured through CPS. Your radio automatically enables Wi-Fi and logs in to the WAVE server once you enter WAVE channel.

1 Press OK to access the menu.

2 Press ▲ or ▼ to `WAVE Channels`. Press OK to select.

3 Press ▲ or ▼ to the required WAVE channel.
Press OK to select.

4 Press ▲ or ▼ to `Set As Active`. Press OK to select.

The display shows ✓ beside the selected channel.

3.2.2
Viewing WAVE Channel Information

1 Do one of the following:
- Press the programmed **WAVE Channel List** button. Skip the following steps.
- Press OK to access the menu.

2 Press ▲ or ▼ to `WAVE Channels`. Press OK to select.

3 Press ▲ or ▼ to the required WAVE channel.
Press OK to select.

4 Press ▲ or ▼ to `View Details`. Press OK to select.

The display shows the WAVE channel details.

3.2.3

Viewing WAVE Endpoints Information

1 Do one of the following:

- Press the programmed **Contact** button. Skip to step 3.
- Press OK to access the menu.

2 Press ▲ or ▼ to `Endpoints`. Press OK to select.

3 Press ▲ or ▼ to the required WAVE Endpoint. Press OK to select.

4 Press OK to select `View Details`.

The display shows the WAVE Endpoint details.

3.2.4

Changing WAVE Configuration

Follow the procedure to set the WAVE server IP address, user ID, and password.

1 Press OK to access the menu.

2 Press ▲ or ▼ to `Utilities`. Press OK to select.

3 Press ▲ or ▼ to `Radio Settings`. Press OK to select.

4 Press ▲ or ▼ to `WAVE`. Press OK to select.

5 Press OK to select `Server Address`. Press OK to change the server address. Press OK to select.

6 Press ▼ to `User ID`. Press OK to change the user ID. Press OK to select.

7 Press ▼ to `Password`. Press OK to view or change the WAVE password. Press OK to select.

8 Press ▼ to `Apply`. Press OK to apply all the changes made.

The display shows the positive mini notice momentarily before returning to the `Radio Settings` screen.

3.2.5
Making WAVE Group Calls

1 Select the WAVE channel with the required group alias or ID.

2 Press the **PTT** button to make the call.

The green LED lights up. The first text line displays the **Group Call** icon and alias. The second text line displays the WAVE group alias.

3 Do one of the following:

- Wait for the Talk Permit Tone to end and speak clearly into the microphone if enabled.
- Wait for the **PTT** Sidetone to end and speak clearly into the microphone if enabled

4 Release the **PTT** button to listen.

The green LED lights up when the target radio responds.The display shows the **Group Call** icon, and alias or ID, and the transmitting radio alias or ID.

5 If the Channel Free Indication feature is enabled, you hear a short alert tone the moment the transmitting radio releases the **PTT** button, indicating the channel is free for you to respond. Press the **PTT** button to respond to the call.

The call ends when there is no voice activity for a predetermined period. The radio returns to the screen you were on prior to initiating the call.

Capacity Max

Capacity Max is MOTOTRBO control channel based trunked radio system.

MOTOTRBO digital radio products are marketed by Motorola Solutions primarily to business and industrial users. MOTOTRBO uses the European Telecommunications Standards Institute (ETSI) Digital Mobile Radio (DMR) standard, that is, two-slot Time Division Multiple Access (TDMA), to pack simultaneous voice or data in a 12.5 kHz channel (6.25 kHz equivalent).

4.1

Push-To-Talk (PTT) Button

The **PTT** button serves two basic purposes.

- While a call is in progress, the **PTT** button allows the radio to transmit to other radios in the call. The microphone is activated when the **PTT** button is pressed.
- While a call is not in progress, the **PTT** button is used to make a new call.

Press and hold the **PTT** button to talk. Release the **PTT** button to listen.

If the Talk Permit Tone or the **PTT** Sidetone is enabled, wait until the short alert tone ends before talking.

If the Channel Free Indication feature is enabled on your radio (programmed by your dealer), you will hear a short alert tone the moment the target radio (the radio that is receiving your call) releases the **PTT** button, indicating the channel is free for you to respond.

You hear a continuous Talk Prohibit Tone if your call is interrupted, for example when the radio receives an Emergency call. You should release the **PTT** button.

4.2

Programmable Buttons

Depending on the duration of a button press, your dealer can program the programmable buttons as shortcuts to radio functions.

Short press
Pressing and releasing rapidly.

Long press
Pressing and holding for the programmed duration.

NOTICE:
See Emergency Operation on page 427 for more information on the programmed duration of the **Emergency** button.

4.3

Assignable Radio Functions

The following radio functions can be assigned to the programmable buttons by your dealer or system administrator.

Audio Ambience
Allows the user to select an environment the radio is operating in.

Audio Profiles
Allows the user to select the preferred audio profile.

Bluetooth® Audio Switch
Toggles audio routing between internal radio speaker and external Bluetooth-enabled accessory.

Bluetooth Connect
Initiates a Bluetooth find-and-connect operation.

Bluetooth Disconnect
Terminates all existing Bluetooth connections between your radio and any Bluetooth-enabled devices.

Bluetooth Discoverable
Enables your radio to enter Bluetooth Discoverable Mode.

Contacts
Provides direct access to the Contacts list.

Call Alert
Provides direct access to the contacts list for you to select a contact to whom a Call Alert can be sent.

Call Log
Selects the call log list.

Emergency
Depending on the programming, initiates or cancels an emergency.

Ext Public Address (PA)
Toggles audio routing between the connected PA loudspeaker amplifier and the internal PA system of the radio.

Reset Home Channel
Sets a new home channel.

Silence Home Channel Reminder
Mutes the Home Channel Reminder.

Indoor Location
Toggles Indoor Location on or off.

Intelligent Audio
Toggles intelligent audio on or off.

Manual Dial
Initiates a Private Call by keying in any subscriber ID.

Manual Site Roam
Starts the manual site search.

Mic AGC
Toggles the internal microphone automatic gain control (AGC) on or off.

Notifications
Provides direct access to the Notifications list.

One Touch Access
Directly initiates a predefined Broadcast, Private, Phone or Group Call, a Call Alert, or a Quick Text message.

Option Board Feature
Toggles option board feature(s) on or off for option board-enabled channels.

Phone
Provides direct access to the Phone Contacts list.

Privacy
Toggles privacy on or off.

Public Address (PA)
Toggles the internal PA system of the radio on or off.

Radio Alias and ID
Provides radio alias and ID.

Remote Monitor
Turns on the microphone of a target radio without it giving any indicators.

Site Info
Displays the current Capacity Max site name and ID.

Plays site announcement voice messages for the current site when Voice Announcement is enabled.

Site Lock
When toggled on, the radio searches the current site only. When toggled off, the radio searches other sites in addition to the current site.

Telemetry Control
Controls the Output Pin on a local or remote radio.

Text Message
Selects the text message menu.

Toggle Call Priority Level
Enables your radio to enter Call Priority Level High/ Normal.

Trill Enhancement
Toggles trill enhancement on or off.

Voice Announcement On/Off
Toggles voice announcement on or off.

Voice Announcement for Channel
Plays zone and channel announcement voice messages for the current channel. This function is unavailable when Voice Announcement is disabled.

Wi-Fi
Toggles Wi-Fi on or off.

Zone Selection
Allows selection from a list of zones.

4.4

Assignable Settings or Utility Functions

The following radio settings or utility functions can be assigned to the programmable buttons.

Tones/Alerts
Toggles all tones and alerts on or off.

Backlight
Toggles display backlight on or off.

Channel Up/Down
Depending on the programming, changes channel to previous or next channel.

Display Mode
Toggles the day/night display mode on or off.

Power Level
Toggles transmit power level between high and low.

4.5

Accessing Programmed Functions

Follow the procedure to access programmed functions in your radio.

1 Do one of the following:
   - Press the programmed button. Proceed to step 3.
   - Press OK to access the menu.

2 Press ▲ or ▼ to the menu function, and press OK to select a function or enter a sub-menu.

3 Do one of the following:

- Press ⮌ to return to the previous screen.
- Long press ⮌ to return to the Home screen.

Your radio automatically exits the menu after a period of inactivity and returns to the Home screen.

The Menu Navigation Buttons are also available on a keypad microphone. See Keypad Microphone Buttons on page 42.

4.6

Status Indicators

This chapter explains the status indicators and audio tones used in the radio.

4.6.1

Icons

The Liquid Crystal Display (LCD) of your radio shows the radio status, text entries, and menu entries.

Table 3: Display Icons

The following icons appear on the status bar at the top of the radio display. The icons are arranged left most in order of appearance or usage, and are channel-specific.

	BeiDou Only Available[1] BeiDou Only feature is enabled. The icon stays lit when a position fix is available.
	Bluetooth Connected The Bluetooth feature is enabled. The icon stays lit when a remote Bluetooth device is connected.
	Bluetooth Not Connected The Bluetooth feature is enabled but there is no remote Bluetooth device connected.

[1] Only applicable for XiR M8660i/XiR M8668i/CM7668i.

	DGNA Radio is in DGNA Talkgroup.
	Emergency Radio is in Emergency mode.
	GNSS Available GNSS feature is enabled. The icon stays lit when a position fix is available.
	GNSS Not Available GNSS feature is enabled but is not receiving data from the satellite.
	High Volume Data Radio is receiving high volume data and channel is busy.
	Indoor Location Available[2] Indoor location status is on and available.

	Indoor Location Unavailable[2] Indoor location status is on but unavailable due to Bluetooth disabled or Beacons Scan suspended by Bluetooth.
	Mute Mode Mute Mode is enabled and speaker is muted.
	Notification Notification List has one or more missed events.
	Option Board The Option Board is enabled. (Option board enabled models only)
	Option Board Non-Function The Option Board is disabled.
	Over-the-Air Programming Delay Timer Indicates time left before automatic restart of radio.

[2] Only applicable for models with the latest software and hardware.

	Priority 1 Indicates Priority Talkgroup 1.
	Priority 2 Indicates Priority Talkgroup 2.
	Received Signal Strength Indicator (RSSI) The number of bars displayed represents the radio signal strength. Four bars indicate the strongest signal. This icon is only displayed while receiving.
	Response Inhibit Response Inhibit is enabled.
	Ring Only Ringing mode is enabled.
	Secure The Privacy feature is enabled.

	Shared Frequency Indicates radio is locking to shared control channel.
	Silent Ring Silent ring mode is enabled.
	Site Roaming The site roaming feature is enabled.
	Status Indicates a new status message.
	Tones Disable Tones are turned off.
	Unsecure The Privacy feature is disabled.
	Wi-Fi Excellent[3] Wi-Fi signal is excellent.
	Wi-Fi Good[3] Wi-Fi signal is good.

[3] Only applicable for XiR M8668i/CM7668i.

	Wi-Fi Average[3] Wi-Fi signal is average.
	Wi-Fi Poor[3] Wi-Fi signal is poor.
	Wi-Fi Unavailable[3] Wi-Fi signal is unavailable.

Table 4: Advance Menu Icons

The following icons appear beside menu items that offer a choice between two options or as an indication that there is a sub-menu offering two options.

	Checkbox (Checked) Indicates that the option is selected.
	Checkbox (Empty) Indicates that the option is not selected.
	Solid Black Box Indicates that the option selected for the menu item with a sub-menu.

Table 5: Bluetooth Device Icons

The following icons appear next to items in the list of Bluetooth-enabled devices available to indicate the device type.

	Bluetooth Audio Device Bluetooth-enabled audio device, such as a headset.
	Bluetooth Data Device Bluetooth-enabled data device, such as a scanner.
	Bluetooth PTT Device Bluetooth-enabled PTT device, such as a PTT-Only Device (POD).

	Bluetooth Sensor Device[3] Bluetooth-enabled sensor device, such as gas sensor.

Table 6: Call Icons

The following icons appear on the display during a call. These icons also appear in the Contacts list to indicate alias or ID type.

	Bluetooth PC Call Indicates a Bluetooth PC Call in progress. In the Contacts list, it indicates a Bluetooth PC Call alias (name) or ID (number).
	Call Priority High Indicating Call Priority Level High is enabled.
	DGNA Call Indicates a DGNA Call is in progress.
	Dispatch Call The Dispatch Call contact type is used to send a text message to a dispatcher PC through a third-party Text Message Server.
	Group Call/All Call Indicates a Group Call or All Call in progress. In the Contacts list, it indicates a group alias (name) or ID (number).
	Private Call Indicates a Private Call in progress. In the Contacts list, it indicates a subscriber alias (name) or ID (number).
	Phone Call as Group/All Call Indicates a Phone Call as Group Call or All Call in progress. In the Contacts list, it indicates a group alias (name) or ID (number).

	Phone Call as Private Call Indicates a Phone Call as Private Call in progress. In the Contacts list, it indicates a phone alias (name) or ID (number).

Table 7: Job Tickets Icons

The following icons appear momentarily on the display in the Job Ticket folder.

	All Jobs Indicates all jobs listed.
	New Jobs Indicates new jobs.
	In Progress Jobs are transmitting. This is seen before indication for Job Tickets Send Failed or Sent Successfully.
	Send Failed Jobs cannot be sent.
	Sent Successfully Jobs have been successfully sent.
	Priority 1 Indicates Priority Level 1 for jobs.
	Priority 2 Indicates Priority Level 2 for jobs.
	Priority 3 Indicates Priority Level 3 for jobs.

Table 8: Mini Notice Icons

The following icons appear momentarily on the display after an action to perform a task is taken.

	Failed Transmission (Negative) Failed action taken.
	Successful Transmission (Positive) Successful action taken.

	Transmission in Progress (Transitional) Transmitting. This is seen before indication for Successful Transmission or Failed Transmission.

Table 9: Sent Items Icons

The following icons appear at the top right corner of the display in the Sent Items folder.

or	**In Progress** The text message to a subscriber alias or ID is pending transmission, followed by waiting for acknowledgement. The text message to a group alias or ID is pending transmission.
or	**Individual or Group Message Read** The text message has been read.
or	**Individual or Group Message Unread** The text message has not been read.
or	**Send Failed** The text message cannot be sent.
or	**Sent Successfully** The text message has been successfully sent.

4.6.2

LED Indicator

The LED indicator shows the operational status of your radio.

Blinking Red

Radio has failed the self-test upon powering up.

Radio is receiving an emergency transmission.

Radio is transmitting in low battery state.

Radio has moved out of range if Auto-Range Transponder System is configured.

Mute Mode is enabled.

Solid Green

Radio is powering up.

Radio is transmitting.

Radio is sending a Call Alert or an emergency transmission.

Blinking Green

Radio is receiving a call or data.

Radio is retrieving Over-the-Air Programming transmissions over the air.

Radio is detecting activity over the air.

NOTICE:
This activity may or may not affect the programmed channel of the radio due to the nature of the digital protocol.

Double Blinking Green

Radio is receiving a privacy-enabled call or data.

Solid Yellow

Radio is in Bluetooth Discoverable Mode.

Blinking Yellow

Radio has yet to respond to a Call Alert.

Double Blinking Yellow

Radio has Auto Roaming enabled.

Radio is actively searching for a new site.

Radio has yet to respond to a Group Call Alert.

Radio is locked.

4.6.3

Tones

The following are the tones that sound through on the radio speaker.

☐

High Pitched Tone

■

Low Pitched Tone

4.6.3.1

Audio Tones

Audio tones provide you with audible indications of the status, or response to data received on the radio.

Continuous Tone

A monotone sound. Sounds continuously until termination.

Periodic Tone

Sounds periodically depending on the duration set by the radio. Tone starts, stops, and repeats itself.

Repetitive Tone

A single tone that repeats itself until it is terminated by the user.

Momentary Tone

Sounds once for a short duration set by the radio.

4.6.3.2

Indicator Tones

Indicator tones provide you with audible indications of the status after an action to perform a task is taken.

Positive Indicator Tone

Negative Indicator Tone

4.7

Registration

There are a number of registration-related messages that you may receive.

Registering

Typically, registration is sent to the system during power-up, Talkgroup change, or during site roaming. If a radio fails registration on a site, the radio automatically attempts to roam to another site. The radio temporarily removes the site where registration was attempted from the roaming list.

The indication means that the radio is busy searching for a site to roam, or that the radio has found a site successfully but is waiting for a response to the registration messages from the radio.

When `Registering` is displayed on the radio, a tone sounds and the yellow LED double flashes to indicate a site search.

If the indications persist, the user should change locations or if allowed, manually roam to another site.

Out of Range

A radio is deemed to be out of range when the radio is unable to detect a signal from the system or from the current site. Typically, this indication means that the radio is outside of the geographic outbound radio frequency (RF) coverage range.

When `Out of Range` is displayed on the radio, a repetitive tone sounds and the red LED flashes.

Contact your dealer or system administrator if the radio still receives out of range indications while being in an area with good RF coverage.

Talkgroup Affiliation Failed

A radio tries to affiliate to the Talkgroup specified in the channels or Unified Knob Position (UKP) during registration.

A radio that is in affiliation fail state is unable to make or receive calls from the Talkgroup that the radio is trying to affiliate to.

When a radio fails to affiliate with a Talkgroup, `UKP Alias` is displayed in the home screen with a highlighted background.

Contact your dealer or system administrator if the radio receives affiliation failure indications.

Register Denied

Registration denied indicators are received when the registration with the system is not accepted.

The radio does not indicate to the radio user the specific reason the registration was denied. Normally, a registration is denied when the system operator has disabled the access of the radio to the system.

When a radio is denied registration, `Register Denied` is displayed on the radio and the yellow LED double flashes to indicate a site search.

4.8

Zone and Channel Selections

This chapter explains the operations to select a zone or channel on your radio.

The radio can be programmed with a maximum of 250 Capacity Max Zones with a maximum of 160 Channels per zone. Each Capacity Max zone contains a maximum of 16

assignable positions.Each Capacity Max zone contains a maximum of 16 assignable positions.

4.8.1

Selecting Zones

Follow the procedure to select the required zone on your radio.

1 Do one of the following:

- Press the programmed **Zone Selection** button. Proceed to step 3.
- Press OK to access the menu.

2 Press ▲ or ▼ to `Zone`. Press OK to select.

The display shows ✓ and the current zone.

3 Press ▲ or ▼ to the required zone. Press OK to select.

The display shows `<Zone> Selected` momentarily and returns to the selected zone screen.

4.8.2

Selecting Zones by Using the Alias Search

Follow the procedure to select the required zone on your radio by using the alias search.

1 Press OK to access the menu.

2 Press ▲ or ▼ to `Zone`. Press OK to select.

The display shows ✓ and the current zone.

3 Enter the first character of the required alias.

The display shows a blinking cursor.

4 Enter the rest of the characters of the required alias.

The alias search is case-insensitive. If there are two or more entries with the same name, the display shows the entry listed first in the list.

The first text line shows the characters you entered. The following text lines show the shortlisted search results.

5 Press OK to select.

The display shows `<Zone> Selected` momentarily and returns to the selected zone screen.

4.8.3

Selecting a Call Type

Use the Channel Selector Knob to select a call type. This can be a Group Call, Broadcast Call, All Call, or Private Call, depending on how your radio is programmed. If you change the Channel Selector Knob to a different position (that has a call type assigned to it), this causes the radio to re-register with the Capacity Max System. The radio registers with the Talkgroup ID that has been programmed for the new Channel Selector Knob position call type.

Your radio does not operate when selected to an unprogrammed channel, use the Channel Selector Knob to select a programmed channel instead.

Once the required zone is displayed (if you have multiple zones in your radio), turn the programmed Channel Selector Knob to select the call type.

4.8.4

Selecting a Site

A site provides coverage for a specific area. In a multi-site network, the Capacity Max radio will automatically search for a new site when the signal level from the current site drops to an unacceptable level.

The Capacity Max system can support up to 250 sites.

4.8.5

Roam Request

A Roam Request tells the radio to search for a different site, even if the signal from the current site is acceptable.

If there are no sites available:

- The radio display shows `Searching` and continues to search through the list of sites.

- The radio will return to the previous site, if the previous site is still available.

NOTICE:
This is programmed by your dealer.

Press the programmed **Manual Site Roam** button.

You hear a tone, indicating the radio has switched to a new site. The display shows `Site ID <Site Number>`.

4.8.6

Site Lock On/Off

When toggled on, the radio searches the current site only. When toggled off, the radio searches other sites in addition to the current site.

Press the programmed **Site Lock** button.

If the **Site Lock** function is toggled on:

- You hear a positive indicator tone, indicating the radio has locked to the current site.
- The display shows `Site Locked`.

If the **Site Lock** function is toggled off:

- You hear a negative indicator tone, indicating the radio is unlocked.
- The display shows `Site Unlocked`.

4.8.7

Site Restriction

In Capacity Max system, your radio administrator has the ability to decide which network sites your radio is and is not allowed to use.

The radio does not have to be reprogrammed to change the list of allowed and disallowed sites. If your radio attempts to register at a disallowed site, your radio receives indication that the site is denied. The radio then searches for a different network site.

When experiencing site restrictions, your radio displays `Register Denied` and the yellow LED double flashes to indicate a site search.

4.8.8

Site Trunking

Site Trunking is only available with Capacity Max system. A site must be able to communicate with the Trunk Controller to be considered as System Trunking.

If the site cannot communicate with the Trunk Controller in the system, a radio enters Site Trunking mode. While in Site Trunking, the radio provides a periodic audible and visual indication to the user to inform the user of their limited functionality.

When a radio is in Site Trunking, the radio displays `Site Trunking` and a repetitive tone sounds.

The radios in Site Trunking are still able to make group and individual voice calls as well as send text messages to other radios within the same site. Voice consoles, logging recorders, phone gateways, and data applications cannot communicate to the radios at the site.

Once in Site Trunking, a radio that is involved in calls across multiple sites will only be able to communicate with other radios within the same site. Communication to and from other sites would be lost.

NOTICE:
If there are multiple sites that cover the current location of the radio and one of the sites enters Site Trunking, the radio roams to another site if within coverage.

4.9

Calls

This chapter explains the operations to receive, respond to, make, and stop calls.

You can select a subscriber alias or ID, or group alias or ID after you have selected a channel by using one of these features:

Alias Search
This method is used for Group, Private, and All Calls only with a keypad microphone.

Contacts List
This method provides direct access to the Contacts list.

Manual Dial (by using Contacts)
This method is used for Private and Phone Calls only with a keypad microphone.

Programmed Number Keys

This method is used for Group, Private, and All Calls only with a keypad microphone.

NOTICE:
You can only have one alias or ID assigned to a number key, but you can have more than one number key associated to an alias or ID. All the number keys on a keypad microphone can be assigned. See Assigning Entries to Programmable Number Keys on page 411 for more information.

Programmed One Touch Access Button

This method is used for Group, Private, and Phone Calls only.

You can only have one ID assigned to a **One Touch Access** button with a short or long programmable button press. Your radio can have multiple **One Touch Access** buttons programmed.

Programmable Button

This method is used for Phone Calls only.

Volume/Channel Selector Knob

This method manually selects a subscriber alias or ID, or group alias or ID.

The LED lights up solid green while the radio is transmitting and blinks green when the radio is receiving.

NOTICE:
The LED lights up solid green while the radio is transmitting and double blinks green when the radio is receiving a privacy-enabled call.

To unscramble a privacy-enabled call, your radio must have the same Privacy Key, or the same Key Value and Key ID (programmed by your dealer), as the transmitting radio (the radio you are receiving the call from).

See Privacy on page 463 for more information.

4.9.1
Group Calls

Your radio must be configured as part of a group to receive a call from or make a call to the group of users.

4.9.1.1
Making Group Calls

To make a call to a group of users, your radio must be configured as part of that group.

1 Do one of the following:

- Select a channel with the active group alias or ID. See Selecting a Call Type on page 65.
- Press the programmed **One Touch Access** button.

2 Press the **PTT** button to make the call.

The green LED lights up. The first text line shows the **Group Call** icon and alias.

3 Do one of the following:

- Wait for the Talk Permit Tone to end and speak clearly into the microphone if enabled.
- Wait for the **PTT** Sidetone to end and speak clearly into the microphone if enabled.

4 Release the **PTT** button to listen.

The green LED lights up when the target radio responds. The display shows the **Group Call** icon, and alias or ID, and the transmitting radio alias or ID.

5 If the Channel Free Indication feature is enabled, you hear a short alert tone the moment the transmitting radio releases the **PTT** button, indicating the channel is free for you to respond. Press the **PTT** button to respond to the call.

The call ends when there is no voice activity for a predetermined period.

The call initiator can press to end a Group Call.

4.9.1.2

Making Group Calls by Using the Contacts List

1 Press OK to access the menu.

2 Press or to Contacts. Press OK to select.

3 Press or to the required alias or ID.

Press OK to select.

4 Press the **PTT** button to make the call.

The green LED lights up.

The first line displays the subscriber alias or ID. The second line displays `Group Call` and the **Group Call** icon.

5 Do one of the following:

- Wait for the Talk Permit Tone to end and speak clearly into the microphone if enabled.
- Wait for the **PTT** Sidetone to end and speak clearly into the microphone if enabled.

6 Release the **PTT** button to listen.

The green LED blinks when any user in the group responds. The display shows the **Group Call** icon, and alias or ID, and the transmitting radio alias or ID.

7 If the Channel Free Indication feature is enabled, you hear a short alert tone the moment the transmitting radio releases the **PTT** button, indicating the channel is free for you to respond. Press the **PTT** button to respond to the call.

The call ends when there is no voice activity for a predetermined period.

You hear a short tone. The display shows `Call Ended`.

4.9.1.3

Making Group Calls by Using the Programmable Number Key

Follow the procedure to make Group Calls on your radio by using the programmable number key.

1 Long press the programmed number key to the predefined alias or ID when you are on the Home screen.

If a number key is assigned to an entry in a particular mode, this feature is not supported when you long press the number key in another mode.

A negative indicator tone sounds if the number key is not associated to an entry.

2 Press the **PTT** button to make the call.

The green LED lights up.

3 Release the **PTT** button to listen.

The green LED blinks when any user in the group responds.

4 If the Channel Free Indication feature is enabled, you hear a short alert tone the moment the transmitting radio releases the **PTT** button, indicating the channel is free for you to respond. Press the **PTT** button to respond to the call.

The call ends when there is no voice activity for a predetermined period. The radio returns to the screen you were on before initiating the call.

The call initiator can press to end the Group Call.

See Assigning Entries to Programmable Number Keys on page 411 for more information.

4.9.1.4

Making Group Calls by Using the Alias Search

You can also use alias or alphanumeric search to retrieve the required subscriber alias. This feature is only applicable while in Contacts.

1 Press OK to access the menu.

2 Press ▲ or ▼ to `Contacts`. Press OK to select.

The display shows the entries in alphabetical order.

3 Press ▲ or ▼ to the required subscriber alias or ID. The first line of the display shows `Phone Number:`. The second line of the display shows a blinking cursor. Use the keypad to enter a telephone number.

4 Press OK to select. If the entry selected is empty, a negative indicator tone sounds and the display shows `Phone Call Invalid #.`

5 Press ▲ or ▼ to Call Phone and Press OK to select. If the access code was not preconfigured in the Contacts list, the first line of the display shows `Access Code:`. The second line of the display shows a blinking cursor. Enter the access code and press the OK button to proceed. If successful, the DTMF tone sounds. You hear the dialing tone of the telephone user. The first line of the display shows the subscriber alias or ID, and the RSSI icon. The second line of the display shows `Phone Call` and the Phone Call icon. If unsuccessful, a tone sounds and the display shows `Phone Call Failed`. Your radio returns to the Access Code input screen. If the access code was preconfigured in the Contacts list, the radio returns to the screen you were on prior to initiating the call.

6 Press the **PTT** button to talk and release it to listen. The **RSSI** icon disappears during transmission.

7 To enter extra digits, if requested by the Phone Call, do one of the following.

- Press any keypad key to begin the input of the extra digits. The first line of the display shows `Extra Digits:`. The second line of the display shows a blinking cursor. Enter the extra digits and press the OK button to proceed. The DTMF tone sounds and the radio returns to the previous screen.
- Press **One Touch Access** button. The DTMF tone sounds. If the entry for the **One Touch Access** button is empty, a negative indicator tone sounds.

8 Press ↩ to end the call. If deaccess code was not preconfigured in the Contacts list, the first line of the display shows `De-Access Code:`. The second line of the display shows a blinking cursor. Enter the deaccess code and press OK to proceed. The radio returns to the previous screen. The DTMF tone sounds and the display shows `Ending Phone Call`. If successful, a tone sounds and the display shows Phone Call Ended. Your radio returns to the Phone Call screen. If unsuccessful, your radio returns to the Phone Call screen. When you press the **PTT** button while in the Phone Contacts screen, as tone sounds and the display shows `Press OK to Place Phone Call`. When the telephone user ends the call, a tone sounds and the display shows `Phone Call Ended`.

If the call ends while you are entering the extra digits requested by the Phone Call, your radio returns to the screen you were on prior to initiating the call.

9 If the Channel Free Indication feature is enabled, you hear a short alert tone the moment the transmitting radio releases the **PTT** button, indicating the channel is free for you to respond. Press the **PTT** button to respond to the call.

The call ends when there is no voice activity for a predetermined period. A tone sounds. The display shows `Call Ended`.

The call initiator can press to end the Group Call.

NOTICE:

During the channel access, press to dismiss the call attempt and a tone sounds button or to exit alias search. Press OK button or to exit alias search. During the call, when you press **One Touch Access** button with the deaccess code preconfigured or enter the deaccess code as the input for extra digits, your radio attempts to end the call. During channel access and access/deaccess code or extra digits transmission, you radio responds to On/Off button, Volume Knob, and Channel Rocker only. A tone sounds for every invalid input.

4.9.1.5

Responding to Group Calls

When you receive a Group Call:

- The green LED blinks.
- The display shows the **Group Call** icon at the top right corner.
- The first text line shows the caller alias.
- The second text line displays the group call alias.

- Your radio unmutes and the incoming call sounds through the speaker.

1 Do one of the following:
   - If the Channel Free Indication feature is enabled, you hear a short alert tone the moment the transmitting radio releases the **PTT** button, indicating the channel is free for you to respond. Press the **PTT** button to respond to the call.
   - If the Voice Interrupt feature is enabled, press the **PTT** button to interrupt the audio from the transmitting radio and free the channel for you to respond.

   The green LED lights up.

2 Do one of the following:
   - Wait for the Talk Permit Tone to end and speak clearly into the microphone if enabled.
   - Wait for the **PTT** Sidetone to end and speak clearly into the microphone if enabled.

3 Release the **PTT** button to listen.

   The call ends when there is no voice activity for a predetermined period.

4.9.2

Broadcast Call

A Broadcast Call is a one-way voice call from any user to an entire talkgroup.

The Broadcast Call feature allows only the call initiating user to transmit to the talkgroup, while the recipients of the call cannot respond.

The broadcast initiator can also end the broadcast call. To receive a call from a group of users, or to call a group of users, the radio must be configured as part of a group.

4.9.2.1

Making Broadcast Calls

1 Do one of the following:
   - Select a channel with the active group alias or ID. See Selecting a Call Type on page 65.
   - Press the programmed **One Touch Access** button.

2 Press the **PTT** button to make the call.

The green LED lights up. The display shows the **Group Call** icon and alias.

3 Do one of the following:

- Wait for the Talk Permit Tone to end and speak clearly into the microphone if enabled.
- Wait for the **PTT** Sidetone to end and speak clearly into the microphone if enabled.

The call initiator can press to end the Broadcast Call.

4.9.2.2

Making Broadcast Calls Using the Contact List

1 Press OK to access the menu.

2 Press or to `Contacts`. Press OK to select.

3 Press or to the required alias or ID.

Press OK to select.

4 Press the **PTT** button to make the call.

The green LED blinks.
The first line displays the subscriber alias or ID. The second line displays `Group Call` and the **Group Call** icon.

5 Do one of the following:

- Wait for the Talk Permit Tone to end and speak clearly into the microphone if enabled.
- Wait for the **PTT** Sidetone to end and speak clearly into the microphone if enabled.

The call initiator can press to end the Broadcast Call.

4.9.2.3

Making Broadcast Calls Using the Programmable Number Key

Follow the procedure to make Broadcast Calls on your radio using the programmable number key.

1 Long press the programmed number key to the predefined alias or ID when you are on the Home screen.

If a number key is assigned to an entry in a particular mode, this feature is not supported when you long press the number key in another mode.

A negative indicator tone sounds if the number key is not associated to an entry.

2 Press the **PTT** button to make the call.

The green LED lights up. The display shows the **Group Call** icon at the top right corner. The first text line shows the caller alias.

3 Do one of the following:

- Wait for the Talk Permit Tone to end and speak clearly into the microphone if enabled.
- Wait for the **PTT** Sidetone to end and speak clearly into the microphone if enabled.

The call initiator can press to end the Broadcast Call.

4.9.2.4

Receiving Broadcast Calls

Follow the procedure to receive a Broadcast Call on your radio.

When you receive a Broadcast Call:

- The green LED blinks.
- The display shows the **Group Call** icon at the top right corner.
- The first text line shows the caller alias.
- The second text line displays the group call alias.

- Your radio unmutes and the incoming call sounds through the speaker.

NOTICE:
Recipient users are not allowed to Talkback during a Broadcast Call. The display shows `Talkback Prohibit`. The Talkback Prohibit Tone plays momentarily if the **PTT** button is pressed during a Broadcast Call.

4.9.3
Private Call

A Private Call is a call from an individual radio to another individual radio.

There are two ways to set up a Private Call.

- The first call type is called Off Air Call Set-Up (OACSU). OACSU sets up the call after performing a radio presence check and completes the call automatically.
- The second type is called Full Off Air Call Set-Up (FOACSU). FOACSU also sets up the call after performing a radio presence check. However, FOACSU calls require user acknowledgment to complete the call and allows the user to either Accept or Decline the call.

The type of call is configured by the system administrator.

NOTICE:
Both the call initiator and recipient are able to terminate an on-going Private Call by pressing .

4.9.3.1
Making Private Calls

Your radio must be programmed for you to initiate a Private Call. If this feature is not enabled, you hear a negative indicator tone when you initiate the call. If the target radio is not available, a short tone sounds and the display show `Party Not Available`.

1. Do one of the following:
   - Select a channel with the active subscriber alias or ID. See Selecting a Call Type on page 65.
   - Press the programmed **One Touch Access** button.
2. Press the **PTT** button to make the call.

   The green LED lights up. The display shows the **Private Call** icon, the subscriber alias, and call status.

3 Wait for the Talk Permit Tone to end and speak clearly into the microphone if enabled.

4 Release the **PTT** button to listen.

The green LED lights up when the target radio responds.

5 The call ends when there is no voice activity for a predetermined period. You will hear a short tone.The display shows `Call Ended`.

Both the call initiator and recipient are able to terminate an on-going Private Call by pressing .

4.9.3.2

Making Private Calls by Using the Programmable Number Key

Follow the procedure to make Private Calls on your radio by using the programmable number key.

1 Long press the programmed number key to the predefined alias or ID when you are on the Home screen.

If a number key is assigned to an entry in a particular mode, this feature is not supported when you long press the number key in another mode.

A negative indicator tone sounds if the number key is not associated to an entry.

2 Press the **PTT** button to make the call.

The green LED lights up. The display shows the **Private Call** icon, subscriber ID or alias, and call status.

3 Release the **PTT** button to listen.

The green LED blinks when the target radio responds. The display shows the destination alias.

4 The call ends when there is no voice activity for a predetermined period. You will hear a short tone. The display shows `Call Ended`.

Both the call initiator and recipient are able to terminate an on-going Private Call by pressing .

See Assigning Entries to Programmable Number Keys on page 411 for more information.

4.9.3.3

Making Private Calls by Using the Alias Search

1 Press OK to access the menu.

2 Press ▲ or ▼ to `Contacts`. Press OK to select.

The display shows the entries in alphabetical order.

3 Press ▲ or ▼ to the required subscriber alias or ID. The first line of the display shows `Phone Number:`. The second line of the display shows a blinking cursor. Use the keypad to enter a telephone number.

4 Press OK to select. If the entry selected is empty, a negative indicator tone sounds and the display shows `Phone Call Invalid #`.

5 Press ▲ or ▼ to Call Phone and Press OK to select. If the access code was not preconfigured in the Contacts list, the first line of the display shows `Access Code:`. The second line of the display shows a blinking cursor. Enter the access code and press the OK button to proceed. If successful, the DTMF tone sounds. You hear the dialing tone of the telephone user. The first line of the display shows the subscriber alias or ID, and the **RSSI** icon. The second line of the display shows `Phone Call` and the **Phone Call** icon. If unsuccessful, a tone sounds and the display shows `Phone Call Failed`. Your radio returns to the Access Code input screen. If the access code was preconfigured in the Contacts list, the radio returns to the screen you were on before initiating the call.

6 Press the **PTT** button to talk and release it to listen. The **RSSI** icon disappears during transmission.

7 To enter extra digits, if requested by the Phone Call, do one of the following.

- Press any keypad key to begin the input of the extra digits. The first line of the display shows `Extra Digits:`. The second line of the display

shows a blinking cursor. Enter the extra digits and press the OK button to proceed. The DTMF tone sounds and the radio returns to the previous screen.

- Press **One Touch Access** button. The DTMF tone sounds. If the entry for the **One Touch Access** button is empty, a negative indicator tone sounds.

8 Press to end the call. If deaccess code was not preconfigured in the Contacts list, the first line of the display shows `De-Access Code:`. The second line of the display shows a blinking cursor. Enter the deaccess code and press OK to proceed. The radio returns to the previous screen. The DTMF tone sounds and the display shows `Ending Phone Call`. If successful, a tone sounds and the display shows `Phone Call Ended`. Your radio returns to the Phone Call screen. If unsuccessful, your radio returns to the Phone Call screen. When you press the **PTT** button while in the Phone Contacts screen, as tone sounds and the display shows `Press OK to Place Phone Call`. When the telephone user ends the call, a tone sounds and the display shows `Phone Call Ended`.

If the call ends while you are entering the extra digits requested by the Phone Call, your radio returns to the screen you were on before initiating the call.

9 The call ends when there is no voice activity for a predetermined period. You will hear a short tone. The display shows `Call Ended`.

Both the call initiator and recipient are able to terminate an on-going Private Call by pressing .

NOTICE:

During the channel access, press to dismiss the call attempt and a tone sounds button or to exit alias search. Press OK button or to exit alias search. During the call, when you press **One Touch Access** button with the deaccess code preconfigured or enter the deaccess code as the input for extra digits, your radio attempts to end the call.

4.9.3.4

Making a Private Call with a One Touch Call Button

The One Touch Call feature allows you to easily make a Private Call to a pre-defined Private Call alias or ID. This feature can be assigned to a short or long programmable button press.

You can only have one alias or ID assigned to a One Touch Call button. Your radio can have multiple One Touch Call buttons programmed.

1 Press the programmed **One Touch Call** button to make a Private Call to the pre-defined Private Call alias or ID.

2 Press the **PTT** button to make the call.

The LED lights up solid green.

The display shows the Private Call alias or ID.

3 Wait for the Talk Permit Tone to finish (if enabled) and speak clearly into the microphone.

4 Release the **PTT** button to listen.

When the target radio responds, the LED blinks green.

If there is no voice activity for a predetermined period of time, the call ends.

Both the call initiator and recipient are able to terminate an on-going Private Call by pressing .

4.9.3.5

Making Private Calls by Using the Manual Dial

1 Press OK to access the menu.

2 Press ▲ or ▼ to `Contacts`. Press OK to select.

3 Press ▲ or ▼ to `Manual Dial`. Press OK to select.

4 Press ▲ or ▼ to `Radio Number`. Press OK to select.

5 Do one of the following:

- Enter the subscriber ID, and press OK to proceed.
- Edit the previously dialed subscriber ID, and press OK to proceed.

6 Press the **PTT** button to make the call.

The green LED lights up. The display shows the destination alias.

7 Wait for the Talk Permit Tone to end and speak clearly into the microphone if enabled.

8 Release the **PTT** button to listen.

The green LED lights up when the target radio responds. The display shows the transmitting user alias or ID.

9 If the Channel Free Indication feature is enabled, you hear a short alert tone the moment the transmitting radio releases the **PTT** button, indicating the channel is free for you to respond. Press the **PTT** button to respond to the call.

The call ends when there is no voice activity for a predetermined period. A tone sounds. The display shows `Call Ended`.

Both the call initiator and recipient are able to terminate an on-going Private Call by pressing .

4.9.3.6

Receiving Private Calls

When you receive Private Calls configured as Off Air Call Set-Up (OACSU):

- The green LED blinks.

- Your radio unmutes and the incoming call sounds through the speaker.

NOTICE:
Depending on how your radio is configured, either OACSU or Full Off Air Call Set-Up (FOACSU), responding to Private Calls may or may not require user acknowledgment.

For the OACSU configuration, your radio unmutes and the call connects automatically.

4.9.3.7

Accepting Private Calls

When you receive Private Calls configured as Full Off Air Call Set-Up (FOACSU):

- The green LED blinks.

1. To accept a Private Call configured as FOACSU, do one of the following:
   - Press ▲ or ▼ to `Accept` and press OK to answer a Private Call.
   - Press the **PTT** button on any entry.

   The green LED lights up.

2. Wait for the Talk Permit Tone to end and speak clearly into the microphone if enabled.

3. Release the **PTT** button to listen.

   The call ends when there is no voice activity for a predetermined period. A tone sounds. The display shows `Call Ended`.

   NOTICE:
   Both the call initiator and recipient are able to terminate an on-going Private Call by pressing ↩ .

4.9.3.8

Declining Private Calls

When you receive Private Calls configured as Full Off Air Call Set-Up (FOACSU):

- The green LED blinks.

  To decline a Private Call configured as FOACSU, do one of the following:

  - Press ▲ or ▼ to `Reject` and press OK to decline a Private Call.
  - Press ↩ to decline a Private Call.

4.9.4
All Calls

An All Call is a call from an individual radio to every radio on the site or every radio at a group of sites, depending on system configuration.

An All Call is used to make important announcements, requiring full attention from the user. The users on the system cannot respond to an All Call.

Capacity Max supports Site All Call and Multi-site All Call. The system administrator may configure one or both of these in your radio.

NOTICE:
Subscribers can support System-Wide All Calls but Motorola Solutions infrastructure does not support System-Wide All Calls.

4.9.4.1
Making All Calls

Your radio must be programmed for you to make an All Call.

1. Select a channel with the active All Call group alias or ID. See Selecting a Call Type on page 65.
2. Press the **PTT** button to make the call.

   The green LED lights up. The display shows the **Group Call** icon and either `All Call`, `Site All Call`, or `Multi Site Call` depending on the type of configuration.
3. Do one of the following:
   - Wait for the Talk Permit Tone to end and speak clearly into the microphone if enabled.
   - Wait for the **PTT** Sidetone to end and speak clearly into the microphone if enabled.

Users on the channel cannot respond to an All Call.

The call initiator can press to end the All Call.

4.9.4.2

Making All Calls by Using the Programmable Number Key

Follow the procedure to make All Calls on your radio by using the programmable number key.

1 Long press the programmed number key assigned to the predefined alias or ID when you are on the Home screen.

If a number key is assigned to an entry in a particular mode, this feature is not supported when you long press the number key in another mode.

A negative indicator tone sounds if the number key is not associated to an entry.

2 Press the **PTT** button to make the call.

The green LED lights up. The display shows the **Group Call** icon and either `All Call`, `Site All Call`, or `Multi Site Call` depending on the type of configuration.

3 Do one of the following:

- Wait for the Talk Permit Tone to end and speak clearly into the microphone if enabled.
- Wait for the **PTT** Sidetone to end and speak clearly into the microphone if enabled.

The call initiator can press to end the All Call.

See Assigning Entries to Programmable Number Keys on page 411 for more information.

4.9.4.3

Making All Calls by Using the Alias Search

1 Press OK to access the menu.

2 Press ▲ or ▼ to `Contacts`. Press OK to select.

The display shows the entries in alphabetical order.

3 Press ▲ or ▼ to the required subscriber alias or ID. The first line of the display shows `Phone Number:`. The second line of the display shows a blinking cursor. Use the keypad to enter a telephone number.

4 Press OK to select. If the entry selected is empty, a negative indicator tone sounds and the display shows `Phone Call Invalid #`.

5 Press ▲ or ▼ to Call Phone. Press OK to select. If the access code was not preconfigured in the Contacts list, the first line of the display shows `Access Code:`. The second line of the display shows a blinking cursor. Enter the access code and press the OK button to proceed. If successful, the DTMF tone sounds. You hear the dialing tone of the telephone user. The first line of the display shows the subscriber alias or ID, and the RSSI icon. The second line of the display shows `Phone Call` and the Phone Call icon. If unsuccessful, a tone sounds and the display shows `Phone Call Failed`. Your radio returns to the Access Code input screen. If the access code was preconfigured in the Contacts list, the radio returns to the screen you were on prior to initiating the call.

6 Press the **PTT** button to talk and release it to listen. The RSSI icon disappears during transmission.

7 To enter extra digits, if requested by the Phone Call, do one of the following.

- Press any keypad key to begin the input of the extra digits. The first line of the display shows `Extra Digits:`. The second line of the display shows a blinking cursor. Enter the extra digits and press the OK button to proceed. The DTMF tone sounds and the radio returns to the previous screen.
- Press **One Touch Access** button. The DTMF tone sounds. If the entry for the **One Touch Access** button is empty, a negative indicator tone sounds.

8 Press to end the call. If deaccess code was not preconfigured in the Contacts list, the first line of the display shows `De-Access Code:`. The second line of the display shows a blinking cursor. Enter the deaccess code and press OK to proceed. The radio returns to the previous screen. The DTMF tone sounds and the display shows `Ending Phone Call`. If successful, a tone sounds and the display shows Phone Call Ended. Your radio returns to the Phone Call screen. If unsuccessful, your radio returns to the Phone Call screen. When you press the **PTT** button while in the Phone Contacts screen, as tone sounds and the display shows `Press OK to Place Phone Call`. When the telephone user ends the call, a tone sounds and the display shows `Phone Call Ended`. If the call ends while you are entering the extra digits requested by the Phone Call, your radio returns to the screen you were on prior to initiating the call.

NOTICE:

The call initiator can press to end the All Call.

4.9.4.4

Receiving All Calls

When you receive an All Call, the following occur:

- A tone sounds.
- The green LED blinks.
- The display shows the **Group Call** icon at the top right corner.
- The first text line shows the caller alias ID.
- The second text line displays either `All Call`, `Site All Call`, or `Multi Site Call` depending on the type of configuration.
- Your radio unmutes and the incoming call sounds through the speaker.

The radio returns to the screen before receiving the All Call when the call ends.

If the Channel Free Indication feature is enabled, you hear a short alert tone when the transmitting radio releases the

PTT button, indicating the channel is free for you to use. You cannot respond to an All Call.

NOTICE:
The radio stops receiving the All Call if you switch to a different channel while receiving the call. You are not able to continue with any menu navigation or editing until the call ends during an All Call.

4.9.5

Phone Calls

A Phone Call is a call in between an individual radio or a group of radios and a telephone.

Depending on how the radio is configured, the following features may or may not be made available:

- Access code
- Dual Tone Multi Frequency (DTMF) tone
- De-access code
- Displaying of caller alias or ID on receiving a phone call
- Ability to reject or accept a phone call

The Phone Call capability can be enabled by assigning and setting up phone numbers on the system. Check with your system administrator to determine how your radio has been programmed.

4.9.5.1

Making Phone Calls

Follow the procedure to make Phone Calls on your radio.

1. Press the programmed **One Touch Access** button to the predefined alias or ID.

   If the entry for the **One Touch Access** button is empty, a negative indicator tone sounds.

   If the access code is not preconfigured in the Contact List, the display shows `Access Code:`.

2. Enter the access code, and press OK to proceed.

   The access or deaccess code cannot be more than 10 characters.

3. Press the **PTT** button to respond to the call.

4. Release the **PTT** button to listen.

5 Enter extra digits with the keypad if requested by the call, and press OK to proceed.

If the call ends while you are entering the extra digits requested by the call, your radio returns to the screen you were on before initiating the call.

The DTMF Tone sounds. Your radio returns to the previous screen.

6 Press to end the call.

7 Do one of the following:

- If the deaccess code was not preconfigured, enter the deaccess code when the display shows `De-Access Code:`, and press OK to proceed. The radio returns to the previous screen.
- Press the programmed **One Touch Access** button. If the entry for the **One Touch Access** button is empty, a negative indicator tone sounds.

The DTMF Tone sounds and the display shows `Ending Phone Call.`
If the call ends successfully:

- A tone sounds.
- The display shows `Call Ended.`

If the call fails to end, the radio returns to the Phone Call screen. Repeat the last two steps or wait for the telephone user to end the call.

4.9.5.2

Making Phone Calls with the Programmable Button

Follow the procedure to make Phone Calls with the programmable button.

1 Press the programmed **Phone** button to enter into the Phone Entry list.

2 Press or to the required alias or ID.

Press OK to select.

If the access code was not preconfigured in the Contacts list, the display shows `Access Code:`.

Enter the access code and press the OK button to proceed.

The green LED lights up. The display shows **Phone Call** icon, subscriber alias or ID, and call status.

If the call-setup is successful:

- The DTMF tone sounds.
- You hear the call waiting tone of the telephone user.
- The display shows **Phone Call** icon, subscriber alias or ID, `Phone Call`, and call status.

If call-setup is unsuccessful:

- A tone sounds.
- The display shows `Phone Call Failed`.
- Your radio returns to the Access Code input screen. If the access code was preconfigured in the Contacts list, the radio returns to the screen you were on prior to initiating the call.

3 Press the **PTT** button to talk. Release the **PTT** button to listen. The RSSI icon disappears during transmission.

4 To enter extra digits, if requested by the Phone Call. Do one of the following:

- Press any keypad key to begin the input of the extra digits. The display shows `Extra Digits:` and a blinking cursor. Enter the extra digits and press the OK button to proceed. The DTMF tone sounds and the radio returns to the previous screen.
- Press **One Touch Access** button. The DTMF tone sounds. If the entry for the **One Touch Access** button is empty, a negative indicator tone sounds.

5 Press to end the call.

If deaccess code was not preconfigured in the Contacts list, the display shows `De-Access Code:`.

Enter the deaccess code and press the OK button to proceed.

The DTMF tone sounds and the display shows `Ending Phone Call`.

If the end-call-setup is successful, a tone sounds and the display shows `Call Ended`.

If the end-call-setup is unsuccessful, your radio returns to the Phone Call screen.

When you press **PTT** button while in the Phone Contacts screen, a tone sounds and the display shows `Press OK to Place Call.`

When the telephone user ends the call, a tone sounds and the display shows `Phone Call Ended`.

If the call ends while you are entering the extra digits requested by the Phone Call, your radio returns to the screen you were on prior to initiating the call.

NOTICE:

During channel access, press to dismiss the call attempt and a tone sounds.

During the call, when you press **One Touch Access** button with the deaccess code preconfigured or enter the deaccess code as the input for extra digits, your radio attempts to end the call.

During channel access and access/deaccess code or extra digits transmission, you radio responds to **On/Off**button, **Volume On/Off Volume Knob** , and **Channel Up/Down Channel Rocker** only. A tone sounds for every invalid input.

4.9.5.3

Making Phone Calls by Using the Contacts List

Follow the procedure to make Phone Calls on your radio by using the Contacts list.

1 Press OK to access the menu.

2 Press ▲ or ▼ to `Contacts`. Press OK to select.

The display shows the entries in alphabetical order.

3 Press ▲ or ▼ to the required alias or ID.

Press OK to select.

When you press the **PTT** button while on the Phone Contacts screen:

- A negative indicator tone sounds.
- The display shows `Press OK to Place Call`.

If the selected entry is empty:

- A negative indicator tone sounds.
- The display shows `Phone Call Invalid #`.

4 Press ▲ or ▼ to `Call Phone`. Press OK to select.

The display shows `Access Code:` if the access code was not preconfigured.

5 Enter the access code, and press OK to proceed.

The access or deaccess code cannot be more than 10 characters.

The display shows `Calling`, subscriber alias or ID, and the **Phone Call** icon.
If the call is successful:

- The DTMF Tone sounds.
- You hear the call waiting tone of the telephone user.
- The display shows the subscriber alias or ID, the **Phone Call** icon, and `Phone Call`.

If the call is unsuccessful:

- A tone sounds.
- The display shows `Phone Call Failed` and then, `Access Code:`.

- Your radio returns to the screen you were on prior to initiating the call if the access code has been preconfigured in the Contacts list.

6 Press the **PTT** button to respond to the call.

The **RSSI** icon disappears.

7 Release the **PTT** button to listen.

8 Enter extra digits with the keypad if requested by the call, and press OK to proceed.

If the call ends while you are entering the extra digits requested by the call, your radio returns to the screen you were on prior to initiating the call.

The DTMF Tone sounds. Your radio returns to the previous screen.

9 Press to end the call.

10 If the deaccess code was not preconfigured, enter the deaccess code when the display shows `De-Access Code:`, and press OK to proceed.

The radio returns to the previous screen. The DTMF Tone sounds and the display shows `Ending Phone Call`.

If the call ends successfully:

- A tone sounds.
- The display shows `Call Ended`.

If the call fails to end, the radio returns to the Phone Call screen. Repeat step 9 and step 10, or wait for the telephone user to end the call. When you press the PTT button while in the Phone Contacts screen, as tone sounds and the display shows `Press OK to Place Call`.

When the telephone user ends the call, a tone sounds and the display shows `Phone Call Ended`.

If the call ends while you are entering the extra digits requested by the Phone Call, your radio returns to the screen you were on prior to initiating the call.

NOTICE:

During the channel access, press to dismiss the call attempt and a tone sounds.

During the call, when you press **One Touch Access** button with the deaccess code preconfigured or enter the deaccess code as the input for extra digits, your radio attempts to end the call.

During channel access and access/deaccess code or extra digits transmission, you radio responds to **On/Off** button, **Volume Knob**, and **Channel Rocker** only. A tone sounds for every invalid input.

4.9.5.4

Making Phone Calls by Using the Alias Search

You can also use alias or alphanumeric search to retrieve the required subscriber alias. This feature is only applicable while in Contacts. Follow the procedure to make Phone Calls on your radio by using the alias search.

1. Press OK to access the menu.
2. Press or to `Contacts`. Press OK to select.

   The display shows the entries in alphabetical order.
3. Press or to the required subscriber alias or ID.
4. Press OK to select. If the entry selected is empty, a negative indicator tone sounds and the display shows `Phone Call Invalid #`.
5. Press or to Call Phone. Press OK to select.

   If the access code was not preconfigured in the Contacts list, the display shows `Access Code:` and

a blinking cursor. Enter the access code and press the OK button to proceed.

If successful:

- The DTMF tone sounds.
- You hear the call waiting tone of the telephone user.
- The display shows the subscriber alias or ID, the **RSSI** icon, `Phone Call`, and the **Phone Call** icon.

If unsuccessful:

- A tone sounds.
- The display shows `Phone Call Failed`.
- Your radio returns to the Access Code input screen. If the access code was preconfigured in the Contacts list, the radio returns to the screen you were on prior to initiating the call.

6 Press the **PTT** button to talk and release it to listen. The **RSSI** icon disappears during transmission.

7 To enter extra digits, if requested by the Phone Call, do one of the following.

- Press any keypad key to begin the input of the extra digits. The display shows `Extra Digits:` and a blinking cursor. Enter the extra digits and press the OK button to proceed. The DTMF tone sound
- Press **One Touch Access** button. The DTMF tone sounds. If the entry for the **One Touch Access** button is empty, a negative indicator tone sounds and the radio returns to the previous screen.

8 Press to end the call.

If deaccess code was not preconfigured in the Contacts list, the display shows `De-Access Code:` and a blinking cursor. Enter the deaccess code and press OK to proceed.

The radio returns to the previous screen. The DTMF tone sounds and the display shows `Ending Phone Call`.

If successful:

- A tone sounds.
- The display shows `Phone Call Ended`.

- Your radio returns to the Phone Call screen.

If unsuccessful:

- Your radio returns to the Phone Call screen.
- When you press the **PTT** button while in the Phone Contacts screen, as tone sounds and the display shows `Press OK to Place Phone Call`.
- When the telephone user ends the call, a tone sounds and the display shows `Phone Call Ended`.
- If the call ends while you are entering the extra digits requested by the Phone Call, your radio returns to the screen you were on prior to initiating the call.

NOTICE:

During the channel access, press to dismiss the call attempt and a tone sounds button or to exit alias search. Press button or to exit alias search. During the call, when you press **One Touch Access** button with the deaccess code preconfigured or enter the deaccess code as the input for extra digits, your radio attempts to end the call. During channel access and access/deaccess code or extra digits transmission, you radio responds to On/Off button, Volume Knob, and Channel Rocker only. A tone sounds for every invalid input.

4.9.5.5

Making Phone Calls by Using the Manual Dial

Follow the procedure to make Phone Calls on your radio by using the manual dial.

1 Press to access the menu.

2 Press ▲ or ▼ to `Contacts`. Press OK to select.

3 Press ▲ or ▼ to `Manual Dial`. Press OK to select.

4 Press ▲ or ▼ to `Phone Number`. Press OK to select.

The display shows `Number:` and a blinking cursor.

5 Enter the telephone number, and press OK to proceed.

The display shows `Access Code:` and a blinking cursor if the access code was not preconfigured.

6 Enter the access code, and press OK to proceed. The access or deaccess code cannot be more than 10 characters.

The green LED lights up. The display shows the **Phone Call** icon, subscriber alias, and call status.

If the call is successful:

- The DTMF Tone sounds.
- You hear the call waiting tone of the telephone user.
- The display shows subscriber alias and the **Phone Call** icon.

If the call is unsuccessful:

- A tone sounds.
- The display shows `Phone Call Failed` and then, `Access Code:`.
- Your radio returns to the screen you were on before initiating the call if the access code has been preconfigured in the Contacts list.

7 Press ⏻ to end the call.

8 Do one of the following:

- If the deaccess code was not preconfigured, enter the deaccess code when the display shows `De-Access Code:`, and press OK to proceed. The radio returns to the previous screen.

- Press the programmed **One Touch Access** button. If the entry for the **One Touch Access** button is empty, a negative indicator tone sounds.

The DTMF Tone sounds and the display shows `Ending Phone Call.`

If the call ends successfully:

- A tone sounds.
- The display shows `Call Ended.`

If the call fails to end, the radio returns to the Phone Call screen. Repeat step 7, or wait for the telephone user to end the call.

NOTICE:
When you press **PTT** button while in the Phone Contacts screen, a tone sounds and the display shows `Press OK to Place Phone Call.`

When the telephone user ends the call, a tone sounds and the display shows `Call Ended.`

If the call ends while you are entering the extra digits requested by the Phone Call, your radio returns to the screen you were on before initiating the call.

During the channel access, press to dismiss the call attempt and a tone sounds.

During the call, when you press **One Touch Access** button with the deaccess code preconfigured or enter the deaccess code as the input for extra digits, your radio attempts to end the call.

During channel access and access/deaccess code or extra digits transmission, you radio responds to **On/Off** button, **Volume Knob**,

and **Channel Rocker** only. A tone sounds for every invalid input.

4.9.5.6

Dual Tone Multi Frequency

The Dual Tone Multi Frequency (DTMF) feature allows your radio to operate in a radio system with an interface to the telephone systems.

Disabling all radio tones and alert will automatically turn off the DTMF tone.

4.9.5.6.1

Initiating DTMF Tone

Follow the procedure to initiate a DTMF tone on your radio.

1 Press and hold the **PTT** button.

2 Do one of the following:

- Enter the desired number to initiate a DTMF tone.
- Press to initiate a DTMF tone.
- Press to initiate a DTMF tone.

4.9.5.7

Responding to Phone Calls as All Calls

When you receive a Phone Call as an All Call, the receiving radio is unable to talkback or respond. The recipient user is also not allowed to end the All Call.

When you receive a Phone Call as an All Call:

- The display shows the **Phone Call** icon at the top right corner.
- The display shows either `All Call`, `Site All Call`, or `Multi Site Call` depending on the type of configuration and `Phone Call`.
- The green LED blinks.

- Your radio unmutes and the incoming call sounds through the speaker.

4.9.5.8

Responding to Phone Calls as Group Calls

Follow the procedure to respond to Phone Calls as Group Calls on your radio.

When you receive a Phone Call as a Group Call:

- The display shows the **Phone Call** icon and `Phone Call`.
- The green LED blinks.
- Your radio unmutes and the incoming call sounds through the speaker.

1. Press the **PTT** button to respond to the call.
2. Release the **PTT** button to listen.
3. Press to end the call.

NOTICE:
Your radio is not able to terminate a phone call as a group call. The telephone user must end the call. The recipient user is only allowed to talk back during the call.

The display shows `Ending Phone Call`.
If the call ends successfully:

- A tone sounds.
- The display shows `Call Ended`.

If the call fails to end, the radio returns to the Phone Call screen. Repeat step 3 or wait for the telephone user to end the call.

4.9.5.9

Responding to Phone Calls as Private Calls

Follow the procedure to respond to Phone Calls as Private Calls on your radio.

When you receive a Phone Call as a Private Call:

- The display shows the **Phone Call** icon and `Phone Call`.

- The green LED blinks.
- Your radio unmutes and the incoming call sounds through the speaker.

1 Press the **PTT** button to respond to the call.

2 Release the **PTT** button to listen.

3 Press to end the call.

NOTICE:
Your radio is not able to terminate a phone call as a group call. The telephone user must end the call. The recipient user is only allowed to talk back during the call.

The display shows `Ending Phone Call`.
If the call ends successfully:

- A tone sounds.
- The display shows `Call Ended`.

If the call fails to end, the radio returns to the Phone Call screen. Repeat step 3 or wait for the telephone user to end the call.

4.9.6
Initiating Transmit Interrupt

An ongoing call is interrupted, when you perform the following actions:

- Press the **Voice PTT** button.
- Press the **Emergency** button.

The receiving radio displays `Call Interrupted`.

4.9.7
Call Preemption

Call Preemption allows a radio to stop any in-progress voice transmission and initiate a priority transmission.

With the Call Preemption feature, the system interrupts and preempts ongoing calls in instances where trunked channels are unavailable.

Higher priority calls such as an Emergency Call or an All Call preempt the transmitting radio to accommodate the higher priority call. If no other Radio Frequency (RF) channels are available, an Emergency Call preempts an All Call as well.

4.9.8

Voice Interrupt

Voice Interrupt allows the user to shut down an in-progress voice transmission.

This feature uses reverse channel signaling to stop the in-progress voice transmission of a radio, if the interrupting radio is configured to Voice Interrupt, and the transmitting radio is configured to be Voice Call Interruptible. The interrupting radio is then allowed to make a voice transmission to the participant in the stopped call.

The Voice Interrupt feature significantly improves the probability of successfully delivering a new transmission to the intended parties when a call is in progress.

Voice Interrupt is accessible to the user only if this feature has been set up in the radio. Check with your dealer or system administrator for more information.

4.9.8.1

Enabling Voice Interrupt

Follow the procedure to initiate Voice Interrupt on your radio.

Your radio must be programmed to allow you to use this feature. Check with your dealer or system administrator for more information.

1. To interrupt the transmission during an on-going call, press the **PTT** button.

   On the interrupted radio, the display shows `Call Interrupted`. The radio sounds a negative indicator tone until the **PTT** button is released.

2. Wait for acknowledgment.

   If successful:

   - A positive indicator tone sounds.

   If unsuccessful:

   - A negative indicator tone sounds.

3. Do one of the following:

   - Wait for the Talk Permit Tone to end and speak clearly into the microphone if enabled.
   - Wait for the **PTT** Sidetone to end and speak clearly into the microphone if enabled.

4.10

Advanced Features

This chapter explains the operations of the features available in your radio.

Your dealer or system administrator may have customized your radio for your specific needs. Check with your dealer or system administrator for more information.

4.10.1

Call Queue

When there are no resources available to process a call, Call Queue enables the call request to be placed in the system queue for the next available resources.

You hear a Call Queue Tone after pressing the **PTT** button and radio screen displays `Call In Queue` indicating that the radio has entered Call Queue State. The **PTT** button may be released once the Call Queue Tone is heard.

If the call setup is successful, the following occur:

- The green LED blinks.
- If enabled, the Talk Permit Tone sounds.
- The display shows the call type icon, ID or alias.
- The radio user has up to 4 seconds to press the **PTT** button to begin voice transmission.

If the call setup is unsuccessful, the following occur:

- If enabled, the Reject Tone sounds.
- The display shows the failure notice screen momentarily.
- The call is terminated and the radio exits the call setup.

4.10.2

Priority Call

Priority Call allows the system to preempt one of the ongoing non-priority calls and initiate the requested high priority call when all channels are busy.

With all channels occupied with high priority calls, the system does not preempt any calls, and places the requesting high-priority call into call queue. If the system fails to place the requesting high-priority call into call queue, it declares failure.

The default settings for Priority Call are preconfigured. Press the programmable button to toggle between normal and high priority level. When you use the following features, the call priority level reverts automatically to the preconfigured setting.

- All voice calls
- DMR Ⅲ Text Message/Text Message
- Job Ticket
- Remote monitor

The following are the types of Priority Call:

High Priority

The radio displays `Next Call: High Priority`.

Call Priority High icon appears at the top of your radio display.

Voice Announcement sounds Next Call: High Priority.

Normal Priority

The radio displays `Next Call: Normal Priority`.

Call Priority High icon disappears.

Voice Announcement sounds Next Call: Normal Priority.

4.10.3

Talkgroup Scan

This feature allows your radio to monitor and join calls for groups defined by a Receive Group List.

When scan is enabled, your radio unmutes to any member in its Receive Group List.

When scan is disabled, your radio does not receive transmission from any members of the Receive Group List, except for All Call, Permanent Talkgroup, and the selected Talkgroup.

4.10.3.1

Turning Talkgroup Scan On or Off

Follow the procedure to turn Talkgroup Scan on or off on your radio.

1. Press OK to access the menu.
2. Press ▲ or ▼ to `Scan`. Press OK to select.
3. Do one of the following:
   - Press ▲ or ▼ to `Turn On`. Press OK to select.
   - Press ▲ or ▼ to `Turn Off`. Press OK to select.

If scan is enabled:

- The display shows `Scan On` and **Scan** icon.

- The yellow LED blinks.
- A positive indicator tone sounds.

If scan is disabled:

- The display shows `Scan Off`.
- The **Scan** icon disappears.
- The LED turns off.
- A negative indicator tone sounds.

4.10.4

Receive Group List

Receive Group List is a feature that allows you to create and assign members on the talkgroup scan list.

This list is created when your radio is programmed and it determines which groups can be scanned. Your radio can support a maximum of 16 members in this list.

If your radio has been programmed to edit the scan list, you can:

- Add/remove talkgroups.
- Add, remove, and/or edit priority for talkgroups. Refer to Editing Priority for a Talkgroup on page 106.
- Add, remove, and/or edit affiliation talkgroups. Refer to Adding Talkgroup Affiliation on page 107 and Removing Talkgroup Affiliation on page 108.
- Replace the existing scan list with a new scan list.

If a talkgroup is programmed as Permanent Talkgroup, you are unable to edit the talkgroup from the scan list.

IMPORTANT:
To add member into the list, the talkgroup must first be configured in the radio.

NOTICE:
Receive Group List is programmed by the system administrator. Check with your dealer or system administrator for more information.

4.10.5

Priority Monitor

The Priority Monitor feature allows the radio to automatically receive transmission from talkgroups with higher priority even when radio is in a talkgroup call.

Radio leaves lower priority talkgroup call for higher priority talkgroup call.

NOTICE:
This feature can only be accessed when Talkgroup Scan feature is enabled.

Priority Monitor feature applies only to members in the Receive Group List. There are two Priority Talkgroups: Priority 1 (P1) and Priority 2 (P2). P1 has higher priority than P2. In Capacity Max system, the radio receives transmission according to the priority order below:

1. Emergency Call for P1 Talkgroup
2. Emergency Call for P2 Talkgroup
3. Emergency Call for Non-priority Talkgroups in the Receive Group List
4. All Call
5. P1 Talkgroup Call
6. P2 Talkgroup Call
7. Non-priority Talkgroups in the Receive Group List

See Editing Priority for a Talkgroup on page 106 for more information on how to add, remove, and/or edit the priority of the talkgroups in the scan list.

NOTICE:
This feature is programmed by the system administrator. Check with your dealer or system administrator for more information.

4.10.5.1

Editing Priority for a Talkgroup

In the Talkgroup Scan Menu, you can view or edit the priority of a talkgroup.

1. Press OK to access the menu.
2. Press ▲ or ▼ to `Scan`. Press OK to select.
3. Press ▲ or ▼ to `View/Edit List`. Press OK to select.
4. Press ▲ or ▼ to the required talkgroup. Press OK to select.

   The current priority is indicated by a **Priority 1** or **Priority 2** icon beside the talkgroup.

5 Press ▲ or ▼ to Edit Priority. Press OK to select.

6 Press ▲ or ▼ to the required priority level.

Press OK to select.

If another talkgroup has been assigned to Priority 1 or Priority 2, you can choose to overwrite the current priority. When the display shows Overwrite Existing?, press ▲ or ▼ to the following options:

- No to return to the previous step.
- Yes to overwrite.

The display shows positive mini notice before returning to the previous screen. The priority icon appears beside the talkgroup.

4.10.6

Multi-Talkgroup Affiliation

Your radio can be configured for up to seven talkgroups at a site.

Of the 16 talkgroups in the Receive Group List, up to seven talkgroups can be assigned as affiliation talkgroups. The selected talkgroup and the priority talkgroups are automatically affiliated.

4.10.6.1

Adding Talkgroup Affiliation

Follow the procedure to add a talkgroup affiliation.

1 Press OK to access the menu.

2 Press ▲ or ▼ to Scan. Press OK to select.

3 Press ▲ or ▼ to View/Edit List. Press OK to select.

4 Press ▲ or ▼ to the required talkgroup ID or alias. Press OK to select.

The affiliation status is displayed at the View/Edit List. The display shows ■ beside the selected talkgroup ID or alias.

5 Press ▲ or ▼ to `Edit Affiliation`. Press OK to select.

6 Do one of the following:

- Press ▲ or ▼ to `On`. Press OK to select.
- Press ▲ or ▼ to `Off`. Press OK to select.

When `On` is selected, ● appears beside the talkgroup ID or alias.

If affiliation is successful, the display shows ✓ beside the selected talkgroup ID or alias.

If affiliation is unsuccessful, ● remains beside the talkgroup ID or alias.

NOTICE:
The radio displays `List Full` when a maximum of seven talkgroups are selected for affiliation in the scan list. To select a new talkgroup for affiliation, remove an existing affiliated talkgroup to make way for the new addition. See Removing Talkgroup Affiliation on page 108 for more information.

4.10.6.2

Removing Talkgroup Affiliation

When the affiliation list is full and you want to select a new talkgroup for affiliation, remove an existing affiliated talkgroup to make way for the new addition. Follow the procedure to remove a talkgroup affiliation.

1 Press OK to access the menu.

2 Press ▲ or ▼ to `Scan`. Press OK to select.

3 Press ▲ or ▼ to `View/Edit List`. Press OK to select.

4 Press ▲ or ▼ to the required talkgroup ID or alias. Press OK to select.

The affiliation status is displayed at the `View/Edit List`. The display shows ● beside the selected talkgroup ID or alias.

5 Press ▲ or ▼ to `Edit Affiliation`. Press OK to select.

6 Press ▲ or ▼ to `Off`. Press OK to select.

When `Off` is selected, ■ disappears from beside the talkgroup ID or alias.

4.10.7

Talkback

The Talkback feature allows you to respond to a transmission while scanning.

If your radio scans into a call from the selectable group scan list, and if the **PTT** button is pressed during the scanned call, the operation of the radio depends on whether Talkback was enabled or disabled during radio programming. Check with your dealer or system administrator for more information.

Talkback Disabled

The radio leaves the scanned call and attempts to transmit on the contact for the currently selected channel position. After the Call Hang Time on the currently selected contact expires, the radio returns to the home channel and starts the Scan Hang Time Timer. The radio resumes group scan after its Scan Hang Time Timer expires.

Talkback Enabled

If the **PTT** button is pressed during the Group Hang Time of the scanned call, the radio attempts to transmit to the scanned group.

NOTICE:
If you scan into a call for a group that is not assigned to a channel position in the currently selected zone and the call ends, switch to the proper zone and then select the channel position of the group to talk back to that group.

4.10.8

Bluetooth®

This feature allows you to use your radio with a Bluetooth-enabled device (accessory) through a Bluetooth connection. Your radio supports both Motorola Solutions and Commercially available Off-The-Shelf (COTS) Bluetooth-enabled devices.

Bluetooth operates within a range of 10 m (32ft) line of sight. This is an unobstructed path between your radio and

your Bluetooth-enabled device. For high degree of reliability, Motorola Solutions recommends to not separate the radio and the accessory.

At the fringe areas of reception, both voice and tone quality start to sound "garbled" or "broken". To correct this problem, position your radio and Bluetooth-enabled device closer to each other (within the 10 m defined range) to re-establish clear audio reception. The Bluetooth function of your radio has maximum power of 2.5 mW (4 dBm) at the 10 m range.

Your radio can support up to three simultaneous Bluetooth connections with Bluetooth-enabled devices of unique types. For example, a headset, a scanner, a sensor device, and a PTT-Only Device (POD).

Refer to the user manual of your respective Bluetooth-enabled device for more details on the full capabilities of your Bluetooth-enabled device.

NOTICE:
If disabled through CPS, all Bluetooth-related features are disabled and the Bluetooth device database is erased.

4.10.8.1

Turning Bluetooth On and Off

Follow the procedure to turn Bluetooth on and off.

1. Press OK to access the menu.
2. Press ▲ or ▼ to `Bluetooth`. Press OK to select.
3. Press ▲ or ▼ to `My Status`. Press OK to select.

   The display shows `On` and `Off`. The current status is indicated by a ✓ .
4. Do one of the following:
   - Press ▲ or ▼ to `On`. Press OK to select. The display shows ✓ beside `On`.
   - Press ▲ or ▼ to `Off`. Press OK to select. The display shows ✓ beside `Off`.

4.10.8.2

Connecting to Bluetooth Devices

Follow the procedure to connect to Bluetooth devices.

Turn on your Bluetooth-enabled device and place it in pairing mode.

1 Press OK to access the menu.

2 Press ▲ or ▼ to `Bluetooth`. Press OK to select.

3 Press ▲ or ▼ to `Devices`. Press OK to select.

4 Do one of the following:

- Press ▲ or ▼ to the required device. Press OK to select.
- Press ▲ or ▼ to `Find Devices` to locate available devices. Press ▲ or ▼ to the required device. Press OK to select.

5 Press ▲ or ▼ to `Connect`. Press OK to select.

Your Bluetooth-enabled device may require additional steps to complete the pairing. Refer to the user manual of your Bluetooth-enabled device.

The display shows `Connecting to <Device>`.

Wait for acknowledgment.
If successful:

- A positive indicator tone sounds.
- The display shows `<Device> Connected` and the **Bluetooth Connected** icon.
- The display shows ✓ beside the connected device.

If unsuccessful:

- A negative indicator tone sounds.

- The display shows `Connecting Failed`.

NOTICE:
If pin code is required, see Accessing the Radio by Using Password on page 188.

4.10.8.3

Connecting to Bluetooth Devices in Discoverable Mode

Follow the procedure to connect to Bluetooth devices in discoverable mode.

Turn on your Bluetooth-enabled device and place it in pairing mode.

1. Press OK to access the menu.
2. Press ▲ or ▼ to `Bluetooth`. Press OK to select.
3. Press ▲ or ▼ to `Find Me`. Press OK to select. The radio can now be found by other Bluetooth-enabled devices for a programmed duration. This is called Discoverable Mode.

Wait for acknowledgment.
If successful:

- A positive indicator tone sounds.
- The display shows `<Device> Connected` and the **Bluetooth Connected** icon.
- The display shows ✓ beside the connected device.

If unsuccessful:

- A negative indicator tone sounds.
- The display shows `Connecting Failed`.

4.10.8.4

Disconnecting from Bluetooth Devices

Follow the procedure to disconnect from Bluetooth devices.

1. Press OK to access the menu.
2. Press ▲ or ▼ to `Bluetooth`. Press OK to select.

3 Press ▲ or ▼ to `Devices`. Press OK to select.

4 Press ▲ or ▼ to the required device. Press OK to select.

5 Press ▲ or ▼ to `Disconnect`. Press OK to select.

The display shows `Disconnecting from <Device>`.

NOTICE:
Your Bluetooth-enabled device may require additional steps to disconnect. Refer to respective user manuals of any Bluetooth-enabled devices.

Wait for acknowledgment.

- A tone sounds.
- The display shows `<Device> Disconnected` and the **Bluetooth Connected** icon disappears.
- The ✓ disappears beside the connected device.

4.10.8.5

Switching Audio Route between Internal Radio Speaker and Bluetooth Device

Follow the procedure to toggle audio routing between internal radio speaker and external Bluetooth device.

Press the programmed **Bluetooth Audio Switch** button.

The display shows one of the following results:

- A tone sounds. The display shows `Route Audio to Radio`.
- A tone sounds. The display shows `Route Audio to Bluetooth`.

4.10.8.6

Viewing Device Details

Follow the procedure to view device details on your radio.

1 Press OK to access the menu.

2 Press ▲ or ▼ to Bluetooth. Press OK to select.

3 Press ▲ or ▼ to Devices. Press OK to select.

4 Press ▲ or ▼ to the required device. Press OK to select.

5 Press ▲ or ▼ to View Details. Press OK to select.

4.10.8.7

Deleting Device Name

You can remove a disconnected device from the list of Bluetooth-enabled devices.

1 Press OK to access the menu.

2 Press ▲ or ▼ to Bluetooth. Press OK to select.

3 Press ▲ or ▼ to Devices. Press OK to select.

4 Press ▲ or ▼ to the required device. Press OK to select.

5 Press ▲ or ▼ to Delete. Press OK to select. The display shows Device Deleted.

4.10.8.8

Bluetooth Mic Gain

This feature allows the user to control the microphone gain value of the connected Bluetooth-enabled device.

1 Press OK to access the menu.

2 Press ▲ or ▼ to `Bluetooth`. Press OK to select.

3 Press ▲ or ▼ to `BT Mic Gain`. Press OK to select.

4 Press ▲ or ▼ to the BT Mic Gain type and the current values. Press OK to select. You can edit the values here.

5 Press ▲ or ▼ to increase or to decrease values. Press OK to select.

4.10.9

Indoor Location

NOTICE:
Indoor Location feature is applicable for models with the latest software and hardware. Check with your dealer or system administrator for more information.

Indoor Location is use to keep track of the location of radio users. When Indoor Location is activated, the radio is in a limited discoverable mode. Dedicated beacons are used to locate the radio and determine its position.

4.10.9.1

Turning Indoor Location On or Off

You can turn on or turn off Indoor Location by performing one of the following actions.

- Access this feature through the menu.

  a. Press OK to access the menu.

  b. Press ▲ or ▼ to `Bluetooth` and press OK to select.

  c. Press ▲ or ▼ to `Indoor Location` and press OK to select.

  d. Press OK to turn on Indoor Location.

  The display shows `Indoor Location On`. You hear a positive indicator tone.
  One of the following scenarios occurs.

- If successful, the Indoor Location Available icon appears on the Home screen display.
- If unsuccessful, the display shows `Turning On Failed`. You hear a negative indicator tone.

e. Press [OK] to turn off Indoor Location.

The display shows `Indoor Location Off`. You hear a positive indicator tone.
One of the following scenarios occurs.

- If successful, the Indoor Location Available icon disappears on the Home screen display.
- If unsuccessful, the display shows `Turning Off Failed`. You hear a negative indicator tone.

- Access this feature by using the programmed button.

a. Long press the programmed **Indoor Location** button to turn on Indoor Location.

The display shows `Indoor Location On`. You hear a positive indicator tone.
One of the following scenarios occurs.

- If successful, the Indoor Location Available icon appears on the Home screen display.
- If unsuccessful, the display shows `Turning On Failed`. If unsuccessful, you hear a negative indicator tone.

b. Press the programmed **Indoor Location** button to turn off Indoor Location.

The display shows `Indoor Location Off`. You hear a positive indicator tone.
One of the following scenarios occurs.

- If successful, the Indoor Location Available icon disappears on the Home screen display.
- If unsuccessful, the display shows `Turning Off Failed`. If unsuccessful, you hear a negative indicator tone.

4.10.9.2

Accessing Indoor Location Beacons Information

Follow the procedure to access Indoor Location beacons information.

1. Press OK to access the menu.
2. Press ▲ or ▼ to `Bluetooth` and press OK to select.
3. Press ▲ or ▼ to `Indoor Location` and press OK to select.
4. Press ▲ or ▼ to `Beacons` and press OK to select.

The display shows the beacons information.

4.10.10

Multi-Site Controls

These features are applicable when your current radio channel is configured to a Capacity Max system.

4.10.10.1

Enabling Manual Site Search

If the radio finds a new site, your radio shows the following indications:

- A positive tone sounds.

If the radio fails to find a new site, your radio shows the following indications:

- A negative tone sounds.

4.10.10.2

Site Lock On/Off

When toggled on, the radio searches the current site only. When toggled off, the radio searches other sites in addition to the current site.

Press the programmed **Site Lock** button.

If the **Site Lock** function is toggled on:

- You hear a positive indicator tone, indicating the radio has locked to the current site.
- The display shows `Site Locked`.

If the **Site Lock** function is toggled off:

- You hear a negative indicator tone, indicating the radio is unlocked.
- The display shows `Site Unlocked`.

4.10.10.3

Accessing Neighbor Sites List

This feature allows the user to check the adjacent sites list of the current home site. Follow the procedure to access the Neighbor Sites List:

1. Press OK to access the menu.
2. Press ▲ or ▼ to `Utilities`. Press OK to select.
3. Press ▲ or ▼ to `Radio Info`. Press OK to select.
4. Press ▲ or ▼ to `Neighbor Sites`. Press OK to select.

4.10.11

Home Channel Reminder

This feature provides a reminder when the radio is not set to the home channel for a period of time.

If this feature is enabled when your radio is not set to the home channel for a period of time, the following occurs periodically:

- The Home Channel Reminder tone and announcement sound.
- The display shows `Non Home Channel`.

4.10.11.1

Muting the Home Channel Reminder

When the Home Channel Reminder sounds, you can temporarily mute the reminder.

Press the programmed **Silence Home Channel Reminder** button.

The display shows `HCR Silenced`.

4.10.11.2

Setting New Home Channels

When the Home Channel Reminder occurs, you can set a new home channel.

1 Do one of the following:

- Press the **Reset Home Channel** programmable button to set the current channel as the new Home Channel. Skip the following steps.
  The first line of the display shows the channel alias and the second line shows `New Home Ch`.
- Press OK to access the menu.

2 Press ▲ or ▼ to `Utilities`. Press OK to select.

3 Press ▲ or ▼ to `Radio Settings`. Press OK to select.

4 Press ▲ or ▼ to `Home Channel`. Press OK to select.

5 Press ▲ or ▼ to the desired new home channel alias. Press OK to select.

The display shows ✓ beside the selected home channel alias.

4.10.12

Remote Monitor

This feature is used to turn on the microphone of a target radio with a subscriber alias or ID. You can use this feature to remotely monitor any audible activity surrounding the target radio.

Both your radio and the target radio must be programmed to allow you to use this feature.

If initiated, the green LED blinks once on the target radio. This feature automatically stops after a programmed duration or when there is any user operation on the target radio.

4.10.12.1

Initiating Remote Monitor

Follow the procedure to initiate Remote Monitor on your radio.

1 Press the programmed **Remote Monitor** button.

2 Press ▲ or ▼ to the required alias or ID.

Press OK to select.

The display shows a transitional mini notice, indicating the request is in progress. The green LED lights up.

3 Wait for acknowledgment.

If successful:

- A positive indicator tone sounds.
- The display shows a positive mini notice.
- The audio from the monitored radio starts playing for a programmed duration, and the display shows `Rem. Monitor`. Once the timer expires, an alert tone sounds, and the LED turns off.

If unsuccessful:

- A negative indicator tone sounds.
- The display shows a negative mini notice.

4.10.12.2

Initiating Remote Monitor by Using the Contacts List

Follow the procedure to initiate Remote Monitor on your radio by using the Contacts list.

1 Press OK to access the menu.

2 Press ▲ or ▼ to `Contacts`. Press OK to select.

3 Press ▲ or ▼ to the required alias or ID.

Press OK to select.

4 Press ▲ or ▼ to `Remote Mon.`. Press OK to select.

The display shows a transitional mini notice, indicating the request is in progress. The green LED lights up.

5 Wait for acknowledgment.

If successful:

- A positive indicator tone sounds.
- The display shows a positive mini notice.
- The audio from the monitored radio starts playing for a programmed duration, and the display shows `Rem. Monitor`. Once the timer expires, an alert tone sounds, and the LED turns off.

If unsuccessful:

- A negative indicator tone sounds.
- The display shows a negative mini notice.

4.10.12.3

Initiating Remote Monitors by Using the Manual Dial

Follow the procedure to initiate Remote Monitor on your radio by using the manual dial.

1 Press OK to access the menu.

2 Press ▲ or ▼ to `Contacts`. Press OK to select.

3 Press ▲ or ▼ to `Manual Dial`. Press OK to select.

4 Press ▲ or ▼ to `Radio Number`. Press OK to select.

5 Do one of the following:

- Enter the subscriber alias or ID, and press OK to proceed.
- Edit the previously dialed ID, and press OK to proceed.

6 Press ▲ or ▼ to `Remote Mon.`. Press OK to select.

The display shows a transitional mini notice, indicating the request is in progress. The green LED lights up.

7 Wait for acknowledgment.

If successful:

- A positive indicator tone sounds.
- The display shows a positive mini notice.
- The audio from the monitored radio starts playing for a programmed duration, and the display shows `Rem. Monitor`. Once the timer expires, an alert tone sounds, and the LED turns off.

If unsuccessful:

- A negative indicator tone sounds.
- The display shows a negative mini notice.

4.10.13

Contacts Settings

Contacts provides address book capabilities on your radio. Each entry corresponds to an alias or ID that you use to initiate a call. The entries are alphabetically sorted.

Each entry, depending on context, associates with the different call types: Group Call, Private Call, Broadcast Call, Site All Call, Multi-site All Call, PC Call, or Dispatch Call.

PC Call and Dispatch Call are data-related. They are only available with the applications. Refer to the data applications documentation for further details.

Contacts menu allows you to assign each entry to a programmable number key or more on a keypad microphone. If an entry is assigned to a number key, your radio can perform a quick dial on the entry.

NOTICE:
You see a checkmark before each number key that is assigned to an entry. If the checkmark is before `Empty`, you have not assign a number key to the entry.

Each entry within Contacts displays the following information:

- Call Type
- Call Alias
- Call ID

NOTICE:
If the Privacy feature is enabled on a channel, you can make privacy-enabled Group Calls, Private Calls, All Calls, and Phone Calls on that channel. Only target radios with the same Privacy Key, or the same Key Value and Key ID as your radio are able to decrypt the transmission.

4.10.13.1

Assigning Entries to Programmable Number Keys

Follow the procedure to assign entries to programmable number keys on your radio.

1 Press OK to access the menu.

2 Press ▲ or ▼ to `Contacts`. Press OK to select.

3 Press ▲ or ▼ to the required alias or ID.

Press OK to select.

4 Press ▲ or ▼ to `Program Key`. Press OK to select.

5 Do one of the following:

- If the desired number key has not been assigned to an entry, press ▲ or ▼ to the desired number key. Press OK to select.
- If the desired number key has been assigned to an entry, the display shows `The Key is Already Assigned` and then, the first text line shows `Overwrite?`. Do one of the following:

  Press ▲ or ▼ to `Yes`. Press OK to select.

The radio sounds a positive indicator tone and the display shows `Contact Saved` and a positive mini notice.

Press ▲ or ▼ to `No` to return to the previous step.

Each entry can be associated to different number keys. You see a ✓ before each number key that is assigned to an entry. If the ✓ is before `Empty`, that number key is not assigned.
If a number key is assigned to an entry in a particular mode, this feature is not supported when you long press the number key in another mode.

The screen automatically returns to the previous menu.

4.10.13.2

Removing Associations Between Entries and Programmable Number Keys

Follow the procedure to remove the associations between entries and programmable number keys on your radio.

1 Do one of the following:

- Long press the programmed number key to the required alias or ID. Proceed to step 4.
- Press OK to access the menu.

2 Press ▲ or ▼ to `Contacts`. Press OK to select.

3 Press ▲ or ▼ to the required alias or ID.

Press OK to select.

4 Press ▲ or ▼ to `Program Key`. Press OK to select.

5 Press ▲ or ▼ to `Empty`. Press OK to select.

The first text line shows `Clear from all keys`.

6 Press ▲ or ▼ to Yes. Press OK to select.

NOTICE:
When an entry is deleted, the association between the entry and its programmed number key(s) is removed.

A positive indicator tone sounds. The display shows Contact Saved.
The screen automatically returns to the previous menu.

4.10.13.3

Adding New Contacts

Follow the procedure to add new contacts on your radio.

1 Press OK to access the menu.

2 Press ▲ or ▼ to Contacts. Press OK to select.

3 Press ▲ or ▼ to New Contact. Press OK to select.

4 Press ▲ or ▼ to select contact type Radio Contact or Phone Contact. Press OK to select.

5 Enter the contact number with the keypad, and press OK to proceed.

6 Enter the contact name with the keypad, and press OK to proceed.

7 Press ▲ or ▼ to the required ringer type.

Press OK to select.

A positive indicator tone sounds. The display shows a positive mini notice.

4.10.14

Call Indicator Settings

This feature allows you to configure call or text message ringing tones.

4.10.14.1

Activating or Deactivating Call Ringers for Private Calls

1 Press OK to access the menu.

2 Press ▲ or ▼ to `Utilities`. Press OK to select.

3 Press ▲ or ▼ to `Radio Settings`. Press OK to select.

4 Press ▲ or ▼ to `Tones/Alerts`. Press OK to select.

5 Press ▲ or ▼ to `Call Ringers`. Press OK to select.

6 Press ▲ or ▼ to `Private Call`. Press OK to select.

7 Press ▲ or ▼ to the required tone. Press OK to select.

If enabled, ✓ appears beside `Enabled`. If disabled, ✓ disappears beside `Enabled`.

4.10.14.2

Activating or Deactivating Call Ringers for Text Messages

1 Press OK to access the menu.

2 Press ▲ or ▼ to `Utilities`. Press OK to select.

3 Press ▲ or ▼ to `Radio Settings`. Press OK to select.

4 Press ▲ or ▼ to `Tones/Alerts`. Press OK to select.

5 Press ▲ or ▼ to `Call Ringers`. Press OK to select.

6 Press ▲ or ▼ to `Text Message`. Press OK to select.

The display shows ✓ and the current tone.

7 Press ▲ or ▼ to the required tone. Press OK to select. The display shows ✓ beside the selected tone.

4.10.14.3

Activating or Deactivating Call Ringers for Call Alerts

1 Press OK to access the menu.

2 Press ▲ or ▼ to `Utilities`. Press OK to select.

3 Press ▲ or ▼ to `Radio Settings`. Press OK to select.

4 Press ▲ or ▼ to `Tones/Alert`. Press OK to select.

5 Press ▲ or ▼ to `Call Ringers`. Press OK to select.

6 Press ▲ or ▼ to `Call Alert`. Press OK to select.

7 Press ▲ or ▼ to the required tone. Press OK to select. The display shows ✓ beside the selected tone.

4.10.14.4

Activating or Deactivating Call Ringers for Selective Calls

Follow the procedure to activate or deactivate call ringers for Selective Calls on your radio.

1 Press OK to access the menu.

2 Press ▲ or ▼ to `Utilities`. Press OK to select.

3 Press ▲ or ▼ to `Radio Settings`. Press OK to select.

4 Press ▲ or ▼ to `Tones/Alerts`. Press OK to select.

5 Press ▲ or ▼ to `Call Ringers`. Press OK to select.

6 Press ▲ or ▼ to `Selective Call`. Press OK to select.

The display shows ✓ and the current tone.

7 Press ▲ or ▼ to the required tone. Press OK to select. The display shows ✓ beside the selected tone.

4.10.14.5

Activating or Deactivating Call Ringers for Telemetry Status with Text

Follow the procedure to activate or deactivate call ringers for telemetry status with text on your radio.

1 Press OK to access the menu.

2 Press ▲ or ▼ to `Utilities`. Press OK to select.

3 Press ▲ or ▼ to `Radio Settings`. Press OK to select.

4 Press ▲ or ▼ to `Tones/Alert`. Press OK to select.

5 Press ▲ or ▼ to `Call Ringers`. Press OK to select.

6 Press ▲ or ▼ to `Telemetry`. Press OK to select.

The current tone is indicated by a ✓ .

4.10.14.6

Assigning Ring Styles

The radio can be programmed to sound one of eleven predefined ringing tones when receiving a Private Call, a Call Alert, or a Text Message from a particular contact.The radio sounds out each ring style as you navigate through the list.

1 Press OK to access the menu.

2 Press ▲ or ▼ to `Contacts`. Press OK to select.

The entries are alphabetically sorted.

3 Press ▲ or ▼ to the required alias or ID.

Press OK to select.

4 Press ▲ or ▼ to `View/Edit`. Press OK to select.

5 Press OK until display shows `Ringer` menu

A ✓ indicates the current selected tone.

6 Press ▲ or ▼ to the required tone. Press OK to select.

A ✓ appears beside the selected tone.

4.10.14.7

Escalating Alarm Tone Volume

The radio can be programmed to continually alert, when a radio call remains unanswered. This is done by automatically increasing the alarm tone volume over time. This feature is known as Escalert.

4.10.15

Call Log Features

Your radio keeps track of all recent outgoing, answered, and missed Private Calls. The call log feature is used to view and manage recent calls.

Missed Call Alerts may be included in the call logs, depending on the system configuration on your radio. You can perform the following tasks in each of your call lists:

- Store Alias or ID to Contacts
- Delete Call
- Delete All Calls
- View Details

4.10.15.1

Viewing Recent Calls

1 Press OK to access the menu.

2 Press ▲ or ▼ to `Call Log`. Press OK to select.

3 Press ▲ or ▼ to the preferred list. The options are `Missed`, `Answered`, and `Outgoing` lists.

Press OK to select.

The display shows the most recent entry.

4 Press ▲ or ▼ to view the list.

You can start a call with the alias or ID the display is currently showing by pressing the **PTT** button.

4.10.15.2

Storing Aliases or IDs from the Call List

Follow the procedure to store aliases or IDs on your radio from the Call list.

1 Press OK to access the menu.

2 Press ▲ or ▼ to `Call Log`. Press OK to select.

3 Press ▲ or ▼ to the required list. Press OK to select.

4 Press ▲ or ▼ to the required alias or ID.

Press OK to select.

5 Press ▲ or ▼ to `Store`. Press OK to select.

The display shows a blinking cursor.

6 Enter the rest of the characters of the required alias.

Press OK to select.

You can store an ID without an alias.

The display shows a positive mini notice.

4.10.15.3

Deleting Calls from the Call List

Follow the procedure to delete calls on your radio from the Call list.

1 Press OK to access the menu.

2 Press ▲ or ▼ to `Call Log`. Press OK to select.

3 Press ▲ or ▼ to the required list. Press OK to select.

If the list is empty:

- A tone sounds.

- The display shows List Empty.

4 Press ▲ or ▼ to the required alias or ID.

Press OK to select.

5 Press ▲ or ▼ to Delete Entry?. Press OK to select.

6 Do one of the following:

- Press OK to select Yes to delete the entry. The display shows Entry Deleted.
- Press ▲ or ▼ to No. Press OK to select. The radio returns to the previous screen.

4.10.15.4

Deleting All Calls from the Call List

Follow the procedure to delete all calls on your radio from the Call list.

1 Press OK to access the menu.

2 Press ▲ or ▼ to Call Log. Press OK to select.

3 Press ▲ or ▼ to the required list. Press OK to select.

4 Press ▲ or ▼ to the required alias or ID.

Press OK to select.

5 Press ▲ or ▼ to Delete All. Press OK to select.

6 Do one of the following:

- Press OK to select Yes to delete all entries. The display shows a positive mini notice.
- Press ▲ or ▼ to No. Press OK to select. The radio returns to the previous screen.

4.10.15.5

Viewing Details from the Call List

Follow the procedure to view details on your radio from the Call list.

1. Press OK to access the menu.
2. Press ▲ or ▼ to `Call Log`. Press OK to select.
3. Press ▲ or ▼ to the required list. Press OK to select.
4. Press ▲ or ▼ to the required alias or ID.

   Press OK to select.
5. Press ▲ or ▼ to `View Details`. Press OK to select.

   The display shows the details.

4.10.16

Call Alert Operation

Call Alert paging enables you to alert a specific radio user to call you back when they are able to do so.

This feature is applicable for subscriber aliases or IDs only and is accessible through the menu by using Contacts, manual dial, or a programmed **One Touch Access** button.

In Capacity Max, the Call Alert feature allows a radio user or a dispatcher to send an alert to another radio user requesting the radio user to call back the initiating radio user when available. Voice communication is not involved in this feature.

The Call Alert Operation can be configured by the dealer or the system administrator in two ways:

- The radio is configured to allow you to press the **PTT** button to respond directly to the call initiator by making a Private Call.
- The radio is configured to allow you to press the **PTT** button and continue with other Talkgroup communication. Pressing the **PTT** button on the call alert entry will not allow the user to respond to the call initiator. The user must navigate to the Missed Call Log option at the Call Log menu and respond to the Call Alert from there.

An Off Air Call Set-Up (OACSU) private call allows the user to respond immediately while a Full Off Air Call Set-Up (FOACSU) private call requires user acknowledgment for the call. OACSU type calls are therefore, recommended being used for the Call Alert feature. See Private Call on page 77.

4.10.16.1

Making Call Alerts

Follow the procedure to make Call Alerts on your radio.

1 Press the programmed **One Touch Access** button.

The display shows `Call Alert` and the subscriber alias or ID. The green LED lights up.

2 Wait for acknowledgment.

If the Call Alert acknowledgment is received, the display shows a positive mini notice.

If the Call Alert acknowledgment is not received, the display shows a negative mini notice.

4.10.16.2

Making Call Alerts by Using the Contacts List

1 Press OK to access the menu.

2 Press ▲ or ▼ to `Contacts`. Press OK to select.

3 Press ▲ or ▼ to the required alias or ID.

Press OK to select.

4 Press ▲ or ▼ to `Call Alert`. Press OK to select.

The display shows `Call Alert` and the subscriber alias or ID. The green LED lights up.

5 Wait for acknowledgment.

- If the acknowledgment is received, the display shows a positive mini notice.

- If the acknowledgment is not received, the display shows a negative mini notice.

4.10.16.3

Responding to Call Alerts

When you receive a Call Alert:

- A repetitive tone sounds.
- The yellow LED blinks.
- The display shows the notification list listing a Call Alert with the alias or ID of the calling radio.

Depending on the configuration by your dealer or system administrator, you can respond to a Call Alert by doing one of the following:

- Press the **PTT** button and respond with a Private Call directly to the caller.
- Press the **PTT** button to continue normal talkgroup communication.
  The Call Alert is moved to the Missed Call option at the Call Log menu. You can respond to the caller from the Missed Called log.

See Notification List on page 191 and Call Log Features on page 130 for more information.

4.10.17

Dynamic Caller Alias

This feature allows you to dynamically edit a Caller Alias from your radio front panel.

NOTICE:
A keypad microphone is required to perform this feature.

When in a call, the receiving radio displays the Caller Alias of the transmitting radio.

The Caller Aliases list can store up to 500 Caller Aliases of transmitting radio. You can view or make Private Calls from the Caller Aliases list. When you turn off your radio, the history of receiving Caller Aliases is removed from the Caller Aliases list.

4.10.17.1

Viewing the Caller Aliases List

You can access the Caller Aliases list to view the transmitting Caller Alias details.

1 Press OK to access the menu.

2 Press ▲ or ▼ to `Caller Aliases`. Press OK to select.

3 Press ▲ or ▼ to the preferred list. Press OK to select.

4 Press ▲ or ▼ to `View Details`. Press OK to select.

4.10.17.2

Initiating Private Call From the Caller Aliases List

You can access the Caller Aliases list to initiate Private Call.

1 Press OK to access the menu.

2 Press ▲ or ▼ to `Caller Aliases`. Press OK to select.

3 Press ▲ or ▼ to the ***<required Caller Alias>***.

4 To call, press and hold the **PTT** button.

4.10.18

Mute Mode

Mute Mode provides an option to silence all audio indicators on your radio.

When Mute Mode is initiated, all audio indicators are muted except higher priority features such as emergency operations.

When Mute Mode is exited, your radio resumes playing ongoing tones and audio transmissions.

IMPORTANT:
You can only enable either Face Down or Man Down one at a time. Both features cannot be enabled together.

4.10.18.1

Turning On Mute Mode

Follow the procedure to turn on Mute Mode.

Access this feature by using the programmed **Mute Mode** button.

The following occurs when Mute mode is enabled:

- Positive Indicator Tone sounds.
- Display shows `Mute Mode On`.
- The red LED light starts blinking and remains blinking until Mute Mode is exited.
- Display shows **Mute Mode** icon on home screen.
- Radio is muted.
- Mute Mode Timer begins counting down the duration that is configured.

4.10.18.2

Setting Mute Mode Timer

Mute Mode feature can be enabled for a pre-configured amount of time by setting the Mute Mode Timer. The timer duration is configured in the radio menu and can range between 0.5–6 hours. Mute Mode is exited once the timer expires.

If the timer is left at 0, the radio remains in Mute mode for an indefinite period until the programmed **Mute Mode** button is pressed.

1. Press OK to access the menu.
2. Press ▲ or ▼ to `Utilities`. Press OK to select.
3. Press ▲ or ▼ to `Radio Settings`. Press OK to select.
4. Press ▲ or ▼ to `Mute Timer`. Press OK to select.
5. Press ▲ or ▼ to edit the numeric value of each digit, and press OK .

4.10.18.3

Exiting Mute Mode

This feature can be exited automatically once the Mute Mode Timer expires.

Do one of the following to exit Mute mode manually:

- Press the programmed **Mute Mode** button.
- Press the **PTT** button on any entry.

The following occurs when Mute mode is disabled:

- Negative Indicator Tone sounds.
- Display shows `Mute Mode Off`.
- The blinking red LED turns off.
- **Mute Mode** icon disappears from home screen.
- Your radio unmutes and speaker state is restored.
- If the timer has not expired, Mute mode timer is stopped.

NOTICE:
Mute Mode is also exited if the user transmits voice or switches to an unprogrammed channel.

4.10.19

Emergency Operation

An Emergency Alarm is used to indicate a critical situation. You are able to initiate an Emergency at any time even when there is activity on the current channel.

In Capacity Max, the receiving radio can only support a single Emergency Alarm at a time. If initiated, a second Emergency Alarm will override the first alarm.

When an Emergency Alarm is received, the recipient may choose to either delete the alarm and exit the Alarm List, or respond to the Emergency Alarm by pressing the **PTT** button and transmitting non-emergency voice.

Your dealer or system administrator can set the duration of a button press for the programmed **Emergency** button, except for long press, which is similar with all other buttons:

Short Press
Duration between 0.05 seconds and 0.75 seconds.

Long Press
Duration between 1.00 second and 3.75 seconds.

The **Emergency** button is assigned with the Emergency On/Off feature. Check with your dealer for the assigned operation of the **Emergency** button.

NOTICE:
If short press the **Emergency** button is assigned to turn on the Emergency mode, then long press the **Emergency** button is assigned to exit the Emergency mode.

If long press the **Emergency** button is assigned to turn on the Emergency mode, then short press the **Emergency** button is assigned to exit the Emergency mode.

Your radio supports three Emergency Alarms:

- Emergency Alarm
- Emergency Alarm with Call
- Emergency Alarm with Voice to Follow

In addition, each alarm has the following types:

Regular
Radio transmits an alarm signal and shows audio and/or visual indicators.

Silent
Radio transmits an alarm signal without any audio or visual indicators. Radio receives calls without any sound through the speaker, until the programmed *hot mic* transmission period is over and/or you press the **PTT** button.

Silent with Voice
Radio transmits an alarm signal without any audio or visual indicators, but allow incoming calls to sound through the speaker.

NOTICE:
Only one of the Emergency Alarms above can be assigned to the programmed **Emergency** button or the **Emergency** footswitch.

4.10.19.1

Sending Emergency Alarms

This feature allows you to send an Emergency Alarm, a non-voice signal, which triggers an alert indication on a group of radios. Follow the procedure to send Emergency Alarms on your radio.

Your radio does not display any audio or visual indicators during Emergency mode when it is set to Silent.

1 Press the programmed **Emergency On** button.

You see one of these results:

- The display shows `Tx Alarms` and the destination alias.
- The display shows `Tx Telegram` and the destination alias.

The green LED lights up. The **Emergency** icon appears.

NOTICE:
If programmed, the Emergency Search tone sounds. This tone is muted when the radio transmits or receives voice, and stops when the radio exits Emergency mode. The Emergency Search tone can be programmed by the dealer or system administrator.

2 Wait for acknowledgment.

If successful:

- The Emergency tone sounds.
- The green LED blinks.
- The display shows `Alarm Sent`.

If unsuccessful after all retries have been exhausted:

- A tone sounds.
- The display shows `Alarm Failed`.

The radio exits the Emergency Alarm mode and returns to the Home screen.

NOTICE:
When configured for Emergency Alarm only, the emergency process consists only of the Emergency Alarm delivery. The emergency ends when an acknowledgment is received from the system, or when channel access attempts have been exhausted.

No voice call is associated with the sending of an Emergency Alarm when operating as Emergency Alarm Only.

4.10.19.2

Sending Emergency Alarms with Call

This feature allows you to send an Emergency Alarm with Call to a group of radios or a dispatcher. Upon acknowledgment by the infrastructure within the group, a group of radios can communicate over a programmed Emergency channel.

The radio must be configured for Emergency Alarm and Call to perform an emergency call after the alarm process.

1 Press the programmed **Emergency On** button.

The display shows `Tx Alarm` and the destination alias. The **Emergency** icon appears.The green LED lights up.

NOTICE:
If your radio is programmed, the Emergency Search tone sounds. This tone is muted when the radio transmits or receives voice, and stops when the radio exits Emergency mode.

If an Emergency Alarm acknowledgment is successfully received:

- The Emergency tone sounds.
- The green LED blinks.
- The display shows `Alarm Sent`.
- Your radio enters the Emergency call mode when the display shows `Emergency` and the destination group alias.

If an Emergency Alarm acknowledgment is not successfully received:

- All retries are exhausted.
- A low-pitched tone sounds.
- The display shows `Alarm Failed`.
- The radio exits the Emergency Alarm mode.

2 Press the **PTT** button to initiate a voice transmission.

The green LED lights up.The display shows the **Group Call** icon.

3 Do one of the following:

- Wait for the Talk Permit Tone to end and speak clearly into the microphone if enabled.
- Wait for the **PTT** Sidetone to end and speak clearly into the microphone if enabled.

4 Release the **PTT** button to listen.

The display shows the caller and group aliases.

5 Press the **PTT** button to respond to the call.

If the Channel Free Indication feature is enabled, you hear a short alert tone the moment the

transmitting radio releases the **PTT** button, indicating the channel is free for you to respond.

6 Press the **Emergency Off** button to exit the Emergency mode.

The radio returns to the Home screen.

NOTICE:
Depending on how your radio is programmed, you may or may not hear a Talk Permit tone. Your radio dealer or system administrator can provide more information on how your radio has been programmed for Emergency.

The Emergency Call initiator may press to end an on-going emergency call. The radio returns to a call idle state but the emergency call screen remains open.

4.10.19.3

Sending Emergency Alarms with Voice to Follow

This feature allows you to send an Emergency Alarm with Voice to Follow to a group of radios. Your radio microphone is automatically activated, allowing you to communicate with the group of radios without pressing the **PTT** button. This activated microphone state is also known as *hot mic*.

NOTICE:
Your radio cannot detect a non-IMPRES microphone that is attached to the rear accessory connector.
When no microphone is detected at the specified programmed connector, your radio checks the alternative connector. Here, your radio gives priority to the detected microphone.

If your radio has Emergency Cycle Mode enabled, repetitions of *hot mic* and receiving period are made for a programmed duration. During Emergency Cycle Mode, received calls sound through the speaker.

If you press the **PTT** button during the programmed receiving period, you hear a prohibit tone, indicating that you should release the **PTT** button. The radio ignores the **PTT** button press and remains in Emergency mode.

If you press the **PTT** button during *hot mic*, and continue to press it after the *hot mic* duration expires, the radio continues to transmit until you release the **PTT** button.

If the Emergency Alarm request fails, the radio does not retry to send the request, and enters the *hot mic* state directly.

NOTICE:
Some accessories may not support *hot mic*. Check with your dealer or system administrator for more information.

Follow the procedure to send Emergency Alarms with voice to follow on your radio.

1 Press the programmed **Emergency On** button or the **Emergency** footswitch.

   You see one of these results:

   - The display shows `Tx Alarm` and the destination alias.
   - The display shows `Tx Telegram` and the destination alias.

   The green LED lights up. The **Emergency** icon appears.

2 Once the display shows `Alarm Sent`, speak clearly into the microphone.

   The radio automatically stops transmitting when:

   - The cycling duration between *hot mic* and receiving calls expires, if Emergency Cycle Mode is enabled.
   - The *hot mic* duration expires, if Emergency Cycle Mode is disabled.

3 Press the **Emergency Off** button to exit the Emergency mode.

   The radio returns to the Home screen.

4.10.19.4

Receiving Emergency Alarms

The receiving radio can only support a single Emergency Alarm at a time. If initiated, a second Emergency Alarm will override the first alarm. Follow the procedure to receive and view Emergency Alarms on your radio.

When you receive an Emergency Alarm:

- A tone sounds.

- The red LED blinks.
- The display shows the Emergency Alarm List, the Emergency Talkgroup ID or alias, and the ID or alias of the transmitting radio.

1 Press OK to view the alarm.

2 Press OK to view the action options and details of the entry in the Alarm List.

3 Press and select Yes to exit the Alarm list.

The radio returns to the home screen with an **Emergency Icon** displayed at the top, indicating the unresolved Emergency Alarm. The **Emergency Icon** disappears once the entry in the Alarm List is deleted.

4 Press OK to access the menu.

5 Select Alarm List to revisit the Alarm list.

6 The tone sounds and the red LED blinks until you exit the Emergency mode. However, the tone can be silenced. Do one of the following:

- Press the **PTT** button to call the group of radios which received the Emergency Alarm.
- Press any programmable button.

4.10.19.5

Responding to Emergency Alarms

When an Emergency Alarm is received, the recipient may choose to either delete the alarm and exit the Alarm List, or respond to the Emergency Alarm by pressing the **PTT** button and transmitting non-emergency voice. Follow the procedure to respond to Emergency Alarms on your radio.

1 If the Emergency Alarm Indication is enabled, the Emergency Alarm List appears when the radio receives an Emergency Alarm. Press or to the required alias or ID.

2 If the Channel Free Indication feature is enabled, you hear a short alert tone the moment the transmitting radio releases the **PTT** button, indicating

the channel is free for you to respond. Press the **PTT** button to transmit non-emergency voice to the same group the Emergency Alarm targeted.

The green LED lights up.

3 Do one of the following:

- Wait for the Talk Permit Tone to end and speak clearly into the microphone if enabled.
- Wait for the **PTT** Sidetone to end and speak clearly into the microphone if enabled.

4 Release the **PTT** button to listen.

When the emergency initiating radio responds:

- The red LED blinks.
- The display shows the **Emergency Call** icon, the Emergency Talkgroup ID or alias, and the ID or alias of the transmitting radio.

NOTICE:
If the Emergency Call Indication is not enabled, the display shows the **Group Call** icon, Emergency Talkgroup ID or alias, and the ID or alias of the transmitting radio.

4.10.19.6

Responding to Emergency Alarms with Call

Follow the procedure to respond to Emergency Alarms with Call on your radio.

When you receive an Emergency Call:

- The Emergency Call Tone sounds if the Emergency Call Indication and Emergency Call Decode Tone is enabled. The Emergency Call Tone will not sound if only the Emergency Call Indication is enabled.
- The display shows the **Emergency Call** icon at the top right corner.
- The text line shows the Emergency Talkgroup ID or alias, and the ID or alias of the transmitting radio.
- Your radio unmutes and the incoming call sounds through the speaker.

1 If the Channel Free Indication feature is enabled, you hear a short alert tone the moment the transmitting radio releases the **PTT** button, indicating

the channel is free for you to respond. Press the **PTT** button to respond to the call.

The green LED lights up.

2 Wait for the Talk Permit Tone to end and speak clearly into the microphone if enabled.

3 Release the **PTT** button to listen.

When the emergency initiating radio responds:

- The red LED blinks.
- The display shows the **Emergency Call** icon, the Emergency Talkgroup ID or alias, and the ID or alias of the transmitting radio.

NOTICE:
If the Emergency Call Indication is not enabled, the display shows the **Group Call** icon, Emergency Talkgroup ID or alias, and the ID or alias of the transmitting radio.

4.10.19.7

Exiting Emergency Mode

Press the programmed **Emergency Off** button.

Your radio shows the following indications:

- The tone ceased.
- The red LED extinguished.
- When acknowlegment is received, the display of the transmitting radio shows `Cancel Emer Success`. If no acknowledgement is received, the display shows `Cancel Emer Failed`.

NOTICE:
If the Cancel Emergency configuration is enabled on the transmitting radio, the emergency alarm in your receiving radio will cease and the status is added to the Alarm List of the receiving radio.

4.10.20

Status Message

This feature allows the user to send status messages to other radios.

The Quick Status list is configured by using CPS-RM and comprises up to a maximum of 99 statuses.

The maximum length for each status message is 16 characters.

NOTICE:
Every status has a corresponding digital value ranging from 0–99. An alias can be specified to each status for ease of reference.

4.10.20.1

Sending Status Messages

Follow the procedure below to send a status message.

1. Do one of the following:
   - Press the programmed **One Touch Access** button. Skip the following steps.
   - Press OK to access the menu.
2. Press ▲ or ▼ to `Status`. Press OK to select.
3. Press ▲ or ▼ to `Quick Status`. Press OK to select.
4. Press ▲ or ▼ to the required status message. Press OK to select.
5. Press ▲ or ▼ to the required subscriber alias or ID, or group alias or ID. Press OK to select.

If successful:

- A positive indicator tone sounds.
- The LED turns off.
- The display shows a positive mini notice momentarily before returning to the `Quick Status` screen.
- The display shows ✓ beside the sent status message.

If unsuccessful:

- A negative indicator tone sounds.
- The LED turns off.
- The display shows the failure notice momentarily before returning to the `Quick Status` screen.

4.10.20.2

Sending Status Message by Using Programmable Button

Follow the procedure to send a status message by using the programmable button.

1. Press the programmed **Status Message** button.
2. Press ▲ or ▼ to the required status message. Press OK to select. The contact list is displayed.
3. Press ▲ or ▼ to the required subscriber alias or ID, or group alias or ID. Press OK to select.

If successful:

- A positive indicator tone sounds.
- The LED turns off.
- The display shows a positive mini notice momentarily before returning to the `Quick Status` screen.
- The display shows ✓ beside the sent status message.

If unsuccessful:

- A negative indicator tone sounds.
- The LED turns off.
- The display shows the failure notice momentarily before returning to the `Quick Status` screen.

4.10.20.3

Sending a Status Message by Using the Contacts List

Follow the procedure to send a status message by using the contacts list.

1. Press OK to access the menu.
2. Press ▲ or ▼ to `Contacts`. Press OK to select.
3. Press ▲ or ▼ to the required subscriber alias or ID, or group alias or ID. Press OK to select.
4. Press ▲ or ▼ to `Send Status`. Press OK to select.

5 Press ▲ or ▼ to the required status message. Press OK to select.

If successful:

- A positive indicator tone sounds.
- The LED turns off.
- The display shows a positive mini notice momentarily before returning to the `Quick Status` screen.
- The display shows ✓ beside the sent status message.

If unsuccessful:

- A negative indicator tone sounds.
- The LED turns off.
- The display shows the failure notice momentarily before returning to the `Quick Status` screen.

4.10.20.4

Sending Status Message by Using Manual Dial

Follow the procedure to send a status message by using the manual dial.

1 Press OK to access the menu.

2 Press ▲ or ▼ to `Contacts`. Press OK to select.

3 Press ▲ or ▼ to `Manual Dial`. Press OK to select.

4 Press ▲ or ▼ to `Radio Number`. Press OK to select.

5 Enter the required subscriber alias or ID, or group alias or ID, and press OK to proceed.

6 Press ▲ or ▼ to `Send Status`. Press OK to select.

7 Press ▲ or ▼ to the required status message. Press OK to select.

If successful:

- A positive indicator tone sounds.
- The LED turns off.
- The display shows a positive mini notice momentarily before returning to the `Quick Status` screen.
- The display shows ✓ beside the sent status message.

If unsuccessful:

- A negative indicator tone sounds.
- The LED turns off.
- The display shows the failure notice momentarily before returning to the `Quick Status` screen.

4.10.20.5

Viewing Status Messages

Follow the procedure to view status messages.

1. Press OK to access the menu.
2. Press ▲ or ▼ to `Status`. Press OK to select.
3. Press ▲ or ▼ to `Inbox`. Press OK to select.
4. Press ▲ or ▼ to the required status message.

   Press OK to select.

   The content of the status message is displayed to the radio user.

Received status messages can also be viewed by accessing the Notification List. See Notification List on page 191 for more information.

4.10.20.6

Responding to Status Messages

Follow the procedure to reply status messages.

1. Press OK to access the menu.
2. Press ▲ or ▼ to `Status`. Press OK to select.

3 Press ▲ or ▼ to Inbox. Press OK to select.

4 Press ▲ or ▼ to the required status message. Press OK to select.

5 The content of the status is displayed. Press OK to select.

6 Press ▲ or ▼ to Reply. Press OK to select.

7 Press ▲ or ▼ to the required status message. Press OK to select.

If successful:

- A positive indicator tone sounds.
- The LED turns off.
- The display shows a positive mini notice before returning to the Inbox screen.
- The display shows ✓ beside the sent status message.

If unsuccessful:

- A negative indicator tone sounds.
- The LED turns off.
- The display shows the failure notice momentarily before returning to the Inbox screen.

4.10.20.7

Deleting a Status Message

Follow the procedure to delete a status message from your radio.

1 Press OK to access the menu.

2 Press ▲ or ▼ to Status. Press OK to select.

3 Press ▲ or ▼ to Inbox. Press OK to select.

4 Press ▲ or ▼ to the required status message. Press OK to select.

5 The content of the status is displayed. Press OK to select.

6 Press ▲ or ▼ to Delete. Press OK to select.

7 Press ▲ or ▼ to Yes. Press OK to select.

- The display shows a positive mini notice before returning to the Inbox screen.

4.10.20.8

Deleting All Status Messages

Follow the procedure to delete all status messages from your radio.

1 Press OK to access the menu.

2 Press ▲ or ▼ to Status. Press OK to select.

3 Press ▲ or ▼ to Inbox. Press OK to select.

4 Press ▲ or ▼ to Delete All. Press OK to select.

5 Press ▲ or ▼ to Yes. Press OK to select.

- The display shows List Empty.

4.10.21

Text Messaging

Your radio is able to receive data, for example a text message, from another radio or a text message application.

There are two types of text messages, Digital Mobile Radio (DMR) Short Text Message and text message. The maximum length of a DMR Short Text Message is 23 characters. The maximum length of a text message is 280 characters, including the subject line. The subject line only

appears when you receive messages from e-mail applications.

NOTICE:
The maximum character length is only applicable for models with the latest software and hardware. For radio models with older software and hardware, the maximum length of a text message is 140 characters. Contact your dealer for more information.

4.10.21.1

Text Messages

The text messages are stored in an Inbox, and sorted according to the most recently received.

The radio exits the current screen once the inactivity timer expires. Long press at any time to return to the Home screen.

4.10.21.1.1

Viewing Text Messages

1 Press OK to access the menu.

2 Press or to Messages. Press OK to select.

3 Press or to Inbox. Press OK to select.

If the Inbox is empty:

- The display shows List Empty.
- A tone sounds, if the Keypad Tone is turned on.

4 Press or to the required message. Press OK to select.

The display shows a subject line if the message is from an e-mail application.

4.10.21.1.2

Viewing Telemetry Status Text Messages

Follow the procedure to view a telemetry status text message from the inbox.

1 Press OK to access the menu.

2 Press ▲ or ▼ to `Messages`. Press OK to select.

3 Press ▲ or ▼ to `Inbox`. Press OK to select.

4 Press ▲ or ▼ to the required message. Press OK to select.

You cannot reply to a Telemetry Status text message.

The display shows `Telemetry: <Status Text Message>`.

5 Long press ↩ to return to the Home screen.

4.10.21.1.3

Responding to Text Messages

When you receive a text message:

- The display shows the Notification list with the alias or ID of the sender.
- The display shows the **Message** icon.

NOTICE:
The radio exits the Text Message alert screen and sets up a Private or Group Call to the sender of the message if the **PTT** button is pressed.

1 Do one of the following:

- Press ▲ or ▼ to `Read`. Press OK to select.
  The display shows the text message. The display shows a subject line if the message is from an e-mail application.
- Press ▲ or ▼ to `Read Later`. Press OK to select.
  The radio returns to the screen you were on prior to receiving the text message.
- Press ▲ or ▼ to `Delete`. Press OK to select.

2 Do one of the following:

- Press OK to return to inbox.

- Press OK a second time to reply, forward, or delete the text message.

4.10.21.1.4

Responding to Text Messages with Quick Text

Follow the procedure to respond to text messages with Quick Text messages on your radio.

1 Do one of the following:

- Press the programmed **Text Message** button. Proceed to Step 3.
- Press OK to access the menu.

2 Press ▲ or ▼ to `Messages`. Press OK to select.

3 Press ▲ or ▼ to `Inbox`. Press OK to select.

4 Press ▲ or ▼ to the required message. Press OK to select.

The display shows a subject line if the message is from an e-mail application.

5 Press OK to access the sub-menu.

6 Press ▲ or ▼ to `Reply`. Press OK to select.

7 Press ▲ or ▼ to `Quick Reply`. Press OK to select.

8 Press ▲ or ▼ to the required message. Press OK to select.

The display shows a transitional mini notice, confirming the message is being sent.

9 Wait for acknowledgment.

If successful:

- A tone sounds.
- The display shows a positive mini notice.

If unsuccessful:

- A tone sounds.
- The display shows a negative mini notice.
- The radio returns to the Resend option screen.

4.10.21.1.5

Resending Text Messages

When you are at the Resend option screen:

Press OK to resend the same message to the same subscriber or group alias or ID.

If successful:

- A positive indicator tone sounds.
- The display shows a positive mini notice.

If unsuccessful:

- A negative indicator tone sounds.
- The display shows a negative mini notice.
- The radio returns to the Resend option screen.

4.10.21.1.6

Forwarding Text Messages

When you are at the Resend option screen:

1. Press ▲ or ▼ to Forward, and press OK to send the same message to another subscriber or group alias or ID.
2. Press ▲ or ▼ to the required alias or ID.

   Press OK to select.

   The display shows a transitional mini notice, confirming your message is being sent.
3. Wait for acknowledgment.

   If successful:

   - A tone sounds.
   - The display shows a positive mini notice.

   If unsuccessful:

- A tone sounds.
- The display shows a negative mini notice.

NOTICE:
You can also manually select a target radio address (see Forwarding Text Messages by Using the Manual Dial on page 439).

4.10.21.1.7

Forwarding Text Messages by Using the Manual Dial

1 Press ▲ or ▼ to `Forward`. Press OK to select.

2 Press OK to send the same message to another subscriber or group alias or ID.

3 Press ▲ or ▼ to `Manual Dial`. Press OK to select.

The display shows `Radio Number:`.

4 Enter the subscriber ID, and press OK to proceed.

The display shows a transitional mini notice, confirming your message is being sent.

5 Wait for acknowledgment.

If successful:

- A tone sounds.
- The display shows a positive mini notice.

If unsuccessful:

- A tone sounds.
- The display shows a negative mini notice.

4.10.21.1.8

Editing Text Messages

Select `Edit` to edit the message.

NOTICE:
If a subject line is present (for messages received from an e-mail application), you cannot edit it.

1 Press ▲ or ▼ to Edit. Press OK to select.

The display shows a blinking cursor.

2 Use the keypad to edit your message.

- Press ◀ to move one space to the left.
- Press ▶ or # to move one space to the right.
- Press * to delete any unwanted characters.
- Long press # to change text entry method.

3 Press OK once message is composed.

4 Do one of the following:

- Press ▲ or ▼ to Send and press OK to send the message.
- Press ▲ or ▼ to Save and press OK to save the message to the Drafts folder.
- Press ↩ to edit the message.
- Press ↩ to choose between deleting the message or saving it to the Drafts folder.

4.10.21.1.9

Writing Text Messages

Follow the procedure to write text message on your radio.

1 Do one of the following:

- Press the programmed **Text Message** button. Proceed to step 3.
- Press OK to access the menu.

2 Press ▲ or ▼ to Messages. Press OK to select.

3 Press ▲ or ▼ to Compose. Press OK to select.

A blinking cursor appears.

4 Use the keypad to type your message.

Press ◀ to move one space to the left.

Press ▶ or # to move one space to the right.

Press * to delete any unwanted characters.

Long press # to change text entry method.

5 Press OK once message is composed.

Do one of the following:

- Press OK to send the message.
- Press ↩. Press ▲ or ▼ to choose among editing, deleting, or saving the message.

  Press OK to select.

4.10.21.1.10

Sending Text Messages

It is assumed that you have a newly written text message or a saved text message.

Select the message recipient. Do one of the following:

- Press ▲ or ▼ to the required alias or ID.

  Press OK to select.
- Press ▲ or ▼ to `Manual Dial`. Press OK to select.Key in the subscriber ID. The first line of the display shows `Radio Number:`. The second line of the display shows a blinking cursor. Key in the subscriber alias or ID. Press OK .

The display shows transitional mini notice, confirming your message is being sent.

If successful:

- A tone sounds.
- The display shows positive mini notice.

If unsuccessful:

- A low tone sounds.
- The display shows negative mini notice.
- The message is moved to the Sent Items folder.

- The message is marked with a Send Failed icon.

NOTICE:
For a newly written text message, the radio returns you to the `Resend` option screen.

4.10.21.1.11

Deleting Text Messages from the Inbox

Follow the procedure to delete text messages from the Inbox on your radio.

1 Do one of the following:
   - Press the programmed **Text Message** button. Proceed to step 3.
   - Press OK to access the menu.

2 Press ▲ or ▼ to `Messages`. Press OK to select.

3 Press ▲ or ▼ to `Inbox`. Press OK to select.

   If the Inbox is empty:
   - The display shows `List Empty`.
   - A tone sounds.

4 Press ▲ or ▼ to the required message. Press OK to select.

   The display shows a subject line if the message is from an e-mail application.

5 Press OK to access the sub-menu.

6 Press ▲ or ▼ to `Delete`. Press OK to select.

7 Press ▲ or ▼ to `Yes`. Press OK to select.

   The display shows a positive mini notice. The screen returns to the Inbox.

4.10.21.1.12

Deleting All Text Messages from the Inbox

1 Do one of the following:

- Press the programmed **Text Message** button. Proceed to step 3.
- Press OK to access the menu.

2 Press ▲ or ▼ to `Messages`. Press OK to select.

3 Press ▲ or ▼ to `Inbox`. Press OK to select.

If the Inbox is empty:

- The display shows `List Empty`.
- A tone sounds.

4 Press ▲ or ▼ to `Delete All`. Press OK to select.

5 Press ▲ or ▼ to `Yes`. Press OK to select.

The display shows a positive mini notice.

4.10.21.2

Sent Text Messages

Once a message is sent to another radio, it is saved in Sent Items folder. The most recent sent text message is always added to the top of the Sent Items folder. You can resend, forward, edit, or delete a Sent text message.

The Sent Items folder is capable of storing a maximum of 30 last sent messages. When the folder is full, the next sent text message automatically replaces the oldest text message in the folder.

If you exit the message sending screen while the message is being sent, the radio updates the status of the message in the Sent Items folder without providing any indication in the display or via sound.

If the radio changes mode or powers down before the status of the message in Sent Items folder is updated, the radio cannot complete any In-Progress messages and automatically marks it with a **Send Failed** icon.

The radio supports a maximum of five In-Progress messages at one time. During this period, the radio cannot send any new message and automatically marks it with a **Send Failed** icon.

If you long press ⮌⌂ at any time, the radio returns to the Home screen.

NOTICE:
If the channel type, for example a conventional digital or Capacity Plus channel, is not a match, you can only edit, forward, or delete a Sent message.

4.10.21.2.1

Viewing Sent Text Messages

1 Do one of the following:

- Press the programmed **Text Message** button. Proceed to step 3.
- Press OK to access the menu.

2 Press ▲ or ▼ to `Messages`. Press OK to select.

3 Press ▲ or ▼ to `Sent Items`. Press OK to select.

If the Sent Items folder is empty:

- The display shows `List Empty`.
- A low tone sounds, if the Keypad Tone is turned on.

4 Press ▲ or ▼ to the required message. Press OK to select.

The icon at the top right corner of the screen indicates the status of the message. See Sent Item Icons.

4.10.21.2.2

Sending Sent Text Messages

When you are viewing a Sent message:

1 Press OK .

2 You can either resend or forward the sent text message. Do one of the following:

- ▼ to `Resend`. Press OK to select.

- to Forward. Press OK to select.

  The display shows a transitional mini notice, confirming your message is being sent.

3 Wait for acknowledgment.

  If successful:

  - A tone sounds.
  - The display shows a positive mini notice.

  If unsuccessful:

  - A tone sounds.
  - The display shows a negative mini notice.
  - The radio proceeds to the Resend option screen. See Resending Text Messages on page 156 for more information.

4.10.21.2.3

Deleting Sent Text Messages from the Sent Items Folder

Follow the procedure to delete sent text messages from the Sent Items folder on your radio.

When you are viewing a Sent message:

1 Press OK .

2 Press or to Delete. Press OK to select.

4.10.21.2.4

Deleting All Sent Text Messages from the Sent Items Folder

Follow the procedure to delete all sent text messages from the Sent Items folder on your radio.

1 Do one of the following:

  - Press the programmed **Text Message** button. Proceed to step 3.
  - Press OK to access the menu.

2 Press or to Messages. Press OK to select.

3 Press ▲ or ▼ to Sent Items. Press OK to select.

If the Sent Items folder is empty:

- The display shows List Empty.
- A tone sounds.

4 Press ▲ or ▼ to Delete All. Press OK to select.

5 Do one of the following:

- Press ▲ or ▼ to Yes. Press OK to select.
  The display shows a positive mini notice.
- Press ▲ or ▼ to No. Press OK to select.
  The radio returns to the previous screen.

4.10.21.3

Saved Text Messages

You can save a text message to send it at a later time.

If a **PTT** button press or a mode change causes the radio to exit the text message writing/editing screen while you are in the process of writing or editing a text message, your current text message is automatically saved to the Drafts folder.

The most recent saved text message is always added to the top of the Drafts list.

The Drafts folder stores a maximum of 10 last saved messages. When the folder is full, the next saved text message automatically replaces the oldest text message in the folder.

4.10.21.3.1

Viewing Saved Text Messages

1 Do one of the following:

- Press the programmed **Text Message** button. Proceed to step 3.
- Press OK to access the menu.

2 Press ▲ or ▼ to Messages. Press OK to select.

3 Press ▲ or ▼ to Drafts. Press OK to select.

4 Press ▲ or ▼ to the required message. Press OK to select.

4.10.21.3.2

Editing Saved Text Messages

1 Press OK while viewing the message.

2 Press ▲ or ▼ to Edit. Press OK to select.

A blinking cursor appears.

3 Use the keypad to type your message.

Press ◀ to move one space to the left.

Press ▶ or # to move one space to the right.

Press * to delete any unwanted characters.

Long press # to change text entry method.

4 Press OK once message is composed.

Do one of the following:

- Press ▲ or ▼ to Send. Press OK to send the message.
- Press ↩. Press ▲ or ▼ to choose between saving or deleting the message. Press OK to select.

4.10.21.3.3

Deleting Saved Text Messages from the Drafts Folder

1 Do one of the following:

- Press the programmed **Text Message** button. Proceed to step 3.
- Press OK to access the menu.

2 Press ▲ or ▼ to Messages. Press OK to select.

3 Press ▲ or ▼ to Drafts. Press OK to select.

4 Press ▲ or ▼ to the required message. Press OK to select.

5 Press ▲ or ▼ to Delete. Press OK to delete the text message.

4.10.21.4

Quick Text Messages

Your radio supports a maximum of 50 Quick Text messages as programmed by your dealer.

While Quick Text messages are predefined, you can edit each message before sending it.

4.10.21.4.1

Sending Quick Text Messages

Follow the procedure to send predefined Quick Text messages on your radio to a predefined alias.

1 Do one of the following:

- Press the programmed **Text Message** button. Proceed to step 3.
- Press the programmed **One Touch Access** button. Proceed to step 6.
  The display shows a transitional mini notice, confirming your message is being sent.
- Press OK to access the menu.

2 Press ▲ or ▼ to Messages. Press OK to select.

3 Press ▲ or ▼ to Quick Text. Press OK to select.

4 Press ▲ or ▼ to the required Quick Text message. Press OK to select.

5 Do the following to select the recipient and send the message.

The display shows a transitional mini notice, confirming that your message is being sent.

6 Wait for acknowledgment.

If successful:

- A positive indicator tone sounds.
- The display shows a positive mini notice.

If unsuccessful:

- A negative indicator tone sounds.
- The display shows a negative mini notice.
- The radio proceeds to the `Resend` option screen. See Resending Text Messages on page 156 for more information.

4.10.22

Text Entry Configuration

Your radio allows you to configure different text.

You can configure the following settings for entering text on your radio:

- Word Predict
- Word Correct
- Sentence Cap
- My Words

Your radio supports the following text entry methods:

- Numbers
- Symbols
- Predictive or Multi-Tap
- Language (If programmed)

NOTICE:

Press ⮌⌂ at any time to return to the previous screen or long press ⮌⌂ to return to the Home Screen. The radio exits the current screen once the inactivity timer expires.

4.10.22.1

Enabling or Disabling Word Correct

Supplies alternative word choices when the word entered into the text editor is not recognized by the in-built dictionary.

1 Press OK to access the menu.

2 Press ▲ or ▼ to `Utilities`. Press OK to select.

3 Press ▲ or ▼ to `Radio Settings`. Press OK to select.

4 Press ▲ or ▼ to `Text Entry`. Press OK to select.

5 Press ▲ or ▼ to `Word Correct`. Press OK to select.

6 Do one of the following:

- Press ▲ or ▼ to `Word Correct`. Press OK to select.
- Press to enable Word Correct. If enabled, ✓ appears beside `Enabled`.
- Press to disable Word Correct. If disabled, ✓ disappears beside `Enabled`.

4.10.22.2

Enabling or Disabling Word Predict

Word Predict: Your radio can learn common word sequences that you often enter. It then predicts the next word you may want to use after you enter the first word of a common word sequence into the text editor.

1 Press OK to access the menu.

2 Press ▲ or ▼ to `Utilities`. Press OK to select.

3 Press ▲ or ▼ to Radio Settings. Press OK to select.

4 Press ▲ or ▼ to Text Entry. Press OK to select.

5 Press ▲ or ▼ to Word Predict. Press OK to select.

6 Do one of the following:

- Press OK to enable the Word Predict. If enabled, ✓ appears beside Enabled.
- Press OK to disable Microphone Dynamic Distortion Control. If disabled, ✓ disappears beside Enabled.

4.10.22.3

Sentence Cap

This feature is used to automatically enable capitalization of the first letter in the first word for every new sentence.

1 Press OK to access the menu.

2 Press ▲ or ▼ to Utilities. Press OK to select.

3 Press ▲ or ▼ to Radio Settings. Press OK to select.

4 Press ▲ or ▼ to Text Entry. Press OK to select.

5 Press ▲ or ▼ to Sentence Cap. Press OK to select.

6 Do one of the following:

- Press OK to enable Sentence Cap. If enabled, ✓ appears beside Enabled.
- Press OK to disable Sentence Cap. If disabled, ✓ disappears beside Enabled.

4.10.22.4

Viewing Custom Words

You can add your own custom words into the in-built dictionary of your radio. Your radio maintains a list to contain these words.

1. Press OK to access the menu.
2. Press ▲ or ▼ to Utilities. Press OK to select.
3. Press ▲ or ▼ to Radio Settings. Press OK to select.
4. Press ▲ or ▼ to Text Entry. Press OK to select.
5. Press ▲ or ▼ to My Words. Press OK to select.
6. Press ▲ or ▼ to List of Words. Press OK to select.

   The display shows the list of custom words.

4.10.22.5

Editing Custom Words

You can edit custom words saved in your radio.

1. Press OK to access the menu.
2. Press ▲ or ▼ to Utilities. Press OK to select.

3 Press ▲ or ▼ to Radio Settings. Press OK to select.

4 Press ▲ or ▼ to Text Entry. Press OK to select.

5 Press ▲ or ▼ to My Words. Press OK to select.

6 Press ▲ or ▼ to List of Words. Press OK to select.

Display shows the list of custom words.

7 Press ▲ or ▼ to the required word. Press OK to select.

8 Press ▲ or ▼ to Edit. Press OK to select.

9 Use the keypad to edit your custom word.

- Press ◀ to move one space to the left.
- Press ▶ key to move one space to the right.
- Press the * key to delete any unwanted characters.
- Long press # to change text entry method.

10 Press OK once your custom word is completed.

The display shows transitional mini notice, confirming your custom word is being saved.

- If the custom word is saved, a tone sounds and the display shows positive mini notice.
- If the custom word is not saved, a low tone sounds and the display show negative mini notice.

4.10.22.6

Adding Custom Words

You can add custom words into the in-built radio dictionary.

1 Press OK to access the menu.

2 Press ▲ or ▼ to Utilities. Press OK to select.

3 Press ▲ or ▼ to Radio Settings. Press OK to select.

4 Press ▲ or ▼ to Text Entry. Press OK to select.

5 Press ▲ or ▼ to My Words. Press OK to select.

6 Press ▲ or ▼ to Add New Word. Press OK to select.

Display shows the list of custom words.

7 Use the keypad to edit your custom word.

- Press ◀ to move one space to the left.
- Press ▶ key to move one space to the right.
- Press the * key to delete any unwanted characters.
- Long press # to change text entry method.

8 Press OK once your custom word is completed.

The display shows transitional mini notice, confirming your custom word is being saved.

- If the custom word is saved, a tone sounds and the display show positive mini notice.
- If the custom word is not saved, a low tone sounds and the display show negative mini notice.

4.10.22.7

Deleting a Custom Word

You can delete the custom words saved in your radio.

1 Press OK to access the menu.

2 Press ▲ or ▼ to Utilities. Press OK to select.

3 Press ▲ or ▼ to Radio Settings. Press OK to select.

4 Press ▲ or ▼ to Text Entry. Press OK to select.

5 Press ▲ or ▼ to My Words. Press OK to select.

6 Press ▲ or ▼ to the required word. Press OK to select.

7 Press ▲ or ▼ to Delete. Press OK to select.

8 Choose one of the following.

- At Delete Entry?, press OK to select Yes. The display shows Entry Deleted.
- Press ▲ or ▼ to No. Press OK to return to the previous screen.

4.10.22.8

Deleting All Custom Words

You can delete all custom words from the in-built dictionary of your radio.

1 Press OK to access the menu.

2 Press ▲ or ▼ to Utilities. Press OK to select.

3 Press ▲ or ▼ to Radio Settings. Press OK to select.

4 Press ▲ or ▼ to Text Entry. Press OK to select.

5 Press ▲ or ▼ to My Words. Press OK to select.

6 Press ▲ or ▼ to Delete All. Press OK to select.

7 Do one of the following:

- At `Delete Entry?`, press OK to select `Yes`. The display shows `All Entries Deleted`.
- Press ▲ or ▼ to `No` to return to the previous screen. Press OK to select.

4.10.23

Job Tickets

This feature allows your radio to receive messages from the dispatcher listing out tasks to perform.

NOTICE:
This feature can be customized through the Customer Programming Software (CPS) according to user requirements. Check with your dealer or system administrator for more information.

There are two folders that contain different Job Tickets:

My Tasks folder
Personalized Job Tickets assigned to your signed in user ID.

Shared Tasks folder
Shared Job Tickets assigned to a group of individuals.

You can respond to Job Tickets in order to sort them into Job Ticket Folders. By default, the folders are **All**, **New**, **Started**, and **Completed**. Check with your dealer or system administrator for an additional 10 folders.

Job Tickets are retained even after the radio is turned off and turned on again.

All Job Tickets are located in the **All** folder. Depending on how your radio is programmed, Job Tickets are sort by their priority level followed by time received. New Job Tickets, Job Tickets with recent changes in state, and Job Tickets with the highest priority are listed first.

Upon reaching the maximum number of Job Tickets, the next Job Ticket automatically replaces the last Job Ticket in your radio. Your radio supports a maximum of 100 or 500 Job Tickets, depending on your radio model. Check with your dealer or system administrator for more information. Your radio automatically detects and discards duplicated Job Tickets with the same Job Ticket ID.

Depending on the importance of the Job Tickets, the dispatcher adds a Priority Level to them. There are three priority levels: Priority 1, Priority 2, and Priority 3. Priority 1

has the highest priority and Priority 3 has the lowest priority. There are also Job Tickets with no priority.

Your radio updates accordingly when dispatcher makes the following changes:

- Modify content of Job Tickets.
- Add or edit Priority Level of Job Tickets.
- Move Job Tickets from folder to folder.
- Canceling of Job Tickets.

4.10.23.1

Accessing the Job Ticket Folder

Follow the procedure to access the Job Ticket folder.

1 Do one of the following:

- Press the programmed **Job Ticket** button. Proceed to step 3.
- Press OK to access the menu.

2 Press ▲ or ▼ to `Job Tickets`. Press OK to select.

3 Press ▲ or ▼ to the required folder. Press OK to select.

4 Press ▲ or ▼ to the required Job Ticket. Press OK to select.

4.10.23.2

Logging In or Out of the Remote Server

This feature allows you to log in and log out of the remote server by using your user ID.

1 Press OK to access the menu.

2 Press ▲ or ▼ to `Log In`. Press OK to select.

If you are already logged in, menu displays `Log Out`.

The display shows a transitional mini notice, indicating the request is in progress.

3 Wait for acknowledgment.

If successful:

- A positive indicator tone sounds.
- The display shows a positive mini notice.

If unsuccessful:

- A negative indicator tone sounds.
- The display shows a negative mini notice.

4.10.23.3

Creating Job Tickets

Your radio is able to create Job Tickets, which are based on a Job Ticket template and send out tasks that need to be performed.

CPS programming software is required to configure the Job Ticket template.

1 Press OK to access the menu.

2 Press ▲ or ▼ to `Job Tickets`. Press OK to select.

3 Press ▲ or ▼ to `Create Ticket`. Press OK to select.

4.10.23.4

Responding to Job Tickets

Follow the procedure to respond to job tickets on your radio.

1 Press OK to access the menu.

2 Press ▲ or ▼ to `Job Tickets`. Press OK to select.

3 Press ▲ or ▼ to the required folder. Press OK to select.

4 Press ▲ or ▼ to the required job ticket. Press OK to select.

5 Press OK once more to access the sub-menu.

You can also press the corresponding number key (1–9) to **Quick Reply**.

6 Press ▲ or ▼ to the required job ticket. Press OK to select.

The display shows a transitional mini notice, indicating the request is in progress.

7 Wait for acknowledgment.

If successful:

- A positive indicator tone sounds.
- The display shows a positive mini notice.

If unsuccessful:

- A negative indicator tone sounds.
- The display shows a negative mini notice.

4.10.23.5

Sending Job Tickets Using One Job Ticket Template

If your radio is configured with one Job Ticket template, perform the following actions to send the Job Ticket.

1 Use the keypad to type the required room number.

Press OK to select.

2 Press ▲ or ▼ to `Room Status`. Press OK to select.

3 Press ▲ or ▼ to the required option. Press OK to select.

4 Press ▲ or ▼ to `Send`. Press OK to select.

The display shows a transitional mini notice, indicating the request is in progress.

5 Wait for acknowledgment.

If successful:

- A positive indicator tone sounds.
- The display shows a positive mini notice.

If unsuccessful:

- A negative indicator tone sounds.
- The display shows a negative mini notice.

4.10.23.6

Sending Job Tickets Using More Than One Job Ticket Template

If your radio is configured with more than one Job Ticket template, perform the following actions to send the Job Tickets.

1 Press ▲ or ▼ to the required option. Press OK to select.

2 Press ▲ or ▼ to Send. Press OK to select.

The display shows a transitional mini notice, indicating the request is in progress.

3 Wait for acknowledgment.

If successful:

- A positive indicator tone sounds.
- The display shows a positive mini notice.

If unsuccessful:

- A negative indicator tone sounds.
- The display shows a negative mini notice.

4.10.23.7

Deleting Job Tickets

Follow the procedure to delete job tickets on your radio.

1 Do one of the following:

- Press the programmed **Job Ticket** button. Proceed to step 4

- Press OK to access the menu.

2 Press ▲ or ▼ to `Job Tickets`. Press OK to select.

3 Press ▲ or ▼ to the required folder. Press OK to select.

4 Press ▲ or ▼ to `All` folder. Press OK to select.

5 Press ▲ or ▼ to the required Job Ticket.

Press OK to select.

6 Press OK again while viewing the Job Ticket.

7 Press ▲ or ▼ to `Delete`. Press OK to select.

The display shows a transitional mini notice, indicating the request is in progress.

8 Wait for acknowledgment.

If successful:

- A positive indicator tone sounds.
- The display shows a positive mini notice.

If unsuccessful:

- A negative indicator tone sounds.
- The display shows a negative mini notice.

4.10.23.8

Deleting All Job Tickets

Follow the procedure to delete all job tickets on your radio.

1 Do one of the following:

- Press the programmed **Job Ticket** button. Proceed to step 3.
- Press OK to access the menu.

2 Press ▲ or ▼ to `Job Tickets`. Press OK to select.

3 Press ▲ or ▼ to the required folder. Press OK to select.

4 Press ▲ or ▼ to All folder. Press OK to select.

5 Press ▲ or ▼ to Delete All. Press OK to select.

6 Do one of the following:

- Press ▲ or ▼ to Yes. Press OK to select.
  The display shows a positive mini notice.
- Press ▲ or ▼ to No. Press OK to select.
  The radio returns to the previous screen.

4.10.24

Privacy

This feature helps to prevent eavesdropping by unauthorized users on a channel by the use of a software-based scrambling solution. The signaling and user identification portions of a transmission are not scrambled.

Your radio must have privacy enabled on the channel to send a privacy-enabled transmission, although this is not a necessary requirement for receiving a transmission. While on a privacy-enabled channel, the radio is still able to receive clear or unscrambled transmissions.

Your radio only supports Enhanced Privacy. To unscramble a privacy-enabled call or data transmission, your radio must be programmed to have the same Key Value and Key ID for Enhanced Privacy as the transmitting radio.

If your radio receives a scrambled call that is of a different Key Value and Key ID, you hear nothing at all for Enhanced Privacy.

On a privacy-enabled channel, your radio is able to receive clear or unscrambled calls, depending on how your radio is programmed. In addition, your radio may play a warning tone or not, depending on how it is programmed.

NOTICE:
This feature is not applicable in Citizens Band channels that are in the same frequency.

The green LED lights up when the radio is transmitting, and blinks rapidly when the radio is receiving an ongoing privacy-enabled transmission.

NOTICE:
Some radio models may not offer this Privacy feature, or may have a different configuration. Check with your dealer or system administrator for more information.

4.10.24.1

Turning Privacy On or Off

Follow the procedure to turn privacy on or off on your radio.

1. Do one of the following:
   - Press the programmed **Privacy** button. Skip the steps below.
   - Press OK to access the menu.
2. Press ▲ or ▼ to `Utilities`. Press OK to select.
3. Press ▲ or ▼ to `Radio Settings`. Press OK to select.
4. Press ▲ or ▼ to `Privacy`. Press OK to select.
5. Do one of the following:
   - Press ▲ or ▼ to `On`. Press OK to select. The display shows ✓ beside `On`.
   - Press ▲ or ▼ to `Off`. Press OK to select. The display shows ✓ beside `Off`.

4.10.25

Response Inhibit

This feature helps prevent your radio from responding to any incoming transmissions.

NOTICE:
Contact your dealer to determine how your radio has been programmed.

If enabled, your radio does not generate any outgoing transmissions in respond to incoming transmissions, such as Radio Check, Call Alert, Radio Disable, Remote Monitor, Automatic Registration Service (ARS), Responding to Private Messages, and Sending GNSS location reports.

Your radio cannot receive Confirmed Private Calls when this feature is enabled. However, your radio is able to manually send transmission.

4.10.25.1
Turning Response Inhibit On or Off

Follow the procedure to enable or disable Response Inhibit on your radio.

Press the programmed **Response Inhibit** button.

If successful:

- A positive indicator tone sounds.
- The display shows a momentary positive mini notice.

If unsuccessful:

- A negative indicator tone sounds.
- The display shows a momentary negative mini notice.

4.10.26
Stun/Revive

This feature allows you to enable or disable any radio in the system. For example, the dealer or system administrator may want to disable a stolen radio to prevent unauthorized users from using it, and enable the radio when it is recovered.

A radio can be disabled (stunned) or enabled (revived) either through the console or through a command initiated by another radio.

Once a radio is disabled, the radio sounds a negative indicator tone and the home screen shows `Channel Denied`.

When a radio is stunned, the radio cannot request nor receive any user initiated services on the system that performed the Stun procedure. However, the radio can switch to another system. The radio continues to send GNSS location reports and can be monitored remotely when it was stunned.

NOTICE:
The dealer or system administrator may permanently disable a radio. See Radio Kill on page 187 for more information.

4.10.26.1

Stunning a Radio

Follow the procedure to disable a radio.

1 Press the programmed **Radio Disable** button.

2 Press ▲ or ▼ to the required alias or ID.

Press OK to select.

The display shows a transitional mini notice, indicating the request is in progress. The green LED blinks.

3 Wait for acknowledgment.

If successful:

- A positive indicator tone sounds.
- The display shows a positive mini notice.

If unsuccessful:

- A negative indicator tone sounds.
- The display shows a negative mini notice.

4.10.26.2

Stunning a Radio by Using the Contacts List

Follow the procedure to disable a radio by using the Contacts List.

1 Press OK to access the menu.

2 Press ▲ or ▼ to `Contacts`. Press OK to select.

3 Press ▲ or ▼ to the required alias or ID.

Press OK to select.

4 Press ▲ or ▼ to `Radio Disable`. Press OK to select.

The display shows a transitional mini notice, indicating the request is in progress. The green LED blinks.

5 Wait for acknowledgment.

If successful:

- A positive indicator tone sounds.
- The display shows a positive mini notice.

If unsuccessful:

- A negative indicator tone sounds.
- The display shows a negative mini notice.

4.10.26.3

Stunning a Radio by Using the Manual Dial

Follow the procedure to disable a radio by using the manual dial.

1 Press OK to access the menu.

2 Press ▲ or ▼ to `Contacts`. Press OK to select.

3 Press ▲ or ▼ to `Manual Dial`. Press OK to select.

4 Press ▲ or ▼ to `Radio Number`. Press OK to select.

The first text line shows `Radio Number:`.

5 Enter the subscriber ID, and press OK to proceed.

6 Press ▲ or ▼ to `Radio Disable`. Press OK to select.

The display shows a transitional mini notice, indicating the request is in progress. The green LED blinks.

7 Wait for acknowledgment.

If successful:

- A positive indicator tone sounds.
- The display shows a positive mini notice.

If unsuccessful:

- A negative indicator tone sounds.
- The display shows a negative mini notice.

4.10.26.4

Reviving a Radio

Follow the procedure to enable a radio.

1 Press the programmed **Radio Enable** button.

2 Press ▲ or ▼ to the required alias or ID.

Press OK to select.

The display shows `Radio Enable` and the subscriber alias or ID. The green LED lights up.

3 Wait for acknowledgment.

If successful:

- A positive indicator tone sounds.
- The display shows a positive mini notice.

If unsuccessful:

- A negative indicator tone sounds.
- The display shows a negative mini notice.

4.10.26.5

Reviving a Radio by Using the Contacts List

Follow the procedure to enable a radio by using the Contacts List.

1 Press OK to access the menu.

2 Press ▲ or ▼ to `Contacts`. Press OK to select.

3 Press ▲ or ▼ to the required alias or ID.

Press OK to select.

4 Press ▲ or ▼ to `Radio Enable`. Press OK to select.

The green LED blinks.

The display shows `Radio Enable` and the subscriber alias or ID. The green LED lights up.

5 Wait for acknowledgment.

If successful:

- A tone sounds.
- The display shows `Radio Enable Successful.`

If unsuccessful:

- A tone sounds.
- The display shows `Radio Enable Failed.`

4.10.26.6

Reviving a Radio by Using the Manual Dial

Follow the procedure to enable a radio by using the Manual Dial.

1 Press OK to access the menu.

2 Press ▲ or ▼ to `Contacts`. Press OK to select.

3 Press ▲ or ▼ to `Manual Dial`. Press OK to select.

4 Press ▲ or ▼ to `Private Call`. Press OK to select.

The first text line shows `Radio Number:`.

5 Enter the subscriber ID, and press OK to proceed.

6 Press ▲ or ▼ to `Radio Enable`. Press OK to select.

The green LED blinks.
The display shows `Radio Enable` and the subscriber alias or ID. The green LED lights up.

7 Wait for acknowledgment.

If successful:

- A tone sounds.
- The display shows `Radio Enable Successful.`

If unsuccessful:

- A tone sounds.
- The display shows `Radio Enable Failed.`

4.10.27

Radio Kill

This feature is an enhanced security measure to restrict unauthorized access to a radio.

Radio Kill causes a radio to be rendered inoperable. For example, the dealer may want to kill a stolen or misplaced radio to prevent unauthorized usage.

When powered on, a killed radio displays `Radio Killed` on the screen momentarily to indicate the killed state.

NOTICE:
A killed radio can only be revived at a Motorola Solutions service depot. Contact your dealer for more information.

4.10.28

Lone Worker

This feature prompts an emergency to be raised if there is no user activity, such as any radio button press or activation of the channel selector, for a predefined time.

Following no user activity for a programmed duration, the radio pre-warns you using an audio indicator once the inactivity timer expires.

If there is still no acknowledgment by you before the predefined reminder timer expires, the radio initiates an emergency condition as programmed by the dealer.

4.10.29

Password Lock

You can set a password to restrict access to your radio. Each time you turn on your radio, you are asked to enter the password.

Your radio supports a 4-digit password input.

You can also use a keypad microphone to enter the password.

Your radio is unable to receive calls in locked state.

4.10.29.1

Accessing the Radio by Using Password

Turn on your radio.

1 Enter the four-digit password.

   a Use a keypad microphone.

   b To edit the numeric value of each digit, press ▲ or ▼. To enter and move to the next digit, press OK.

   NOTICE:
   The use of **Emergency** footswitch cancels password input to access the radio.

2 Press OK to confirm the password.

If you enter the password correctly, the radio powers up.

If you enter the wrong password after the first and second attempt, your radio shows the following indications:

- A continuous tone sounds.
- The display shows `Wrong Password`.

Repeat step 1.

If you enter the wrong password after the third attempt, your radio shows the following indications:

- A tone sounds.
- The yellow LED double blinks.
- The display shows `Wrong Password` and then, `Radio Locked`.
- Your radio enters into locked state for 15 minutes.

NOTICE:
In locked state, your radio responds to inputs from the **On/Off/Volume Control Knob** and programmed **Backlight** button only.

Wait for the 15-minute locked state timer to end and then repeat step 1.

NOTICE:
If you turn off and turn your radio on again, the 15-minute timer restarts.

4.10.29.2

Unlocking Radios in Locked State

Your radio is unable to receive calls in locked state. Follow the procedure to unlock your radio in locked state.

Do one of the following:

- If the radio is powered on, wait for 15 minutes and then repeat the steps in Accessing the Radio by Using Password on page 188 to access the radio.
- If the radio is powered off, power up the radio. Your radio restarts the 15-minute timer for locked state. A tone sounds. The yellow LED double blinks. The display shows `Radio Locked`.

  Wait for 15 minutes and then repeat the steps in Accessing the Radio by Using Password on page 188 to access the radio.

4.10.29.3

Turning Password Lock On or Off

Follow the procedure to turn password lock on or off on your radio.

1. Press OK to access the menu.
2. Press ▲ or ▼ to `Utilities`. Press OK to select.
3. Press ▲ or ▼ to `Radio Settings`. Press OK to select.
4. Press ▲ or ▼ to `Passwd Lock`. Press OK to select.
5. Enter the current four-digit password.
   - Use a keypad microphone.
   - Press ▲ or ▼ to edit the numeric value of each digit, and press OK to enter and move to the next digit.
     A positive indicator tone sounds for every digit pressed.
6. Press OK to enter the password.

   If the password is incorrect, the display shows `Wrong Password` and automatically returns to the previous menu.
7. Do one of the following:

- Press ▲ or ▼ to Turn On. Press OK to select.
  The display shows ✓ beside Turn On.
- Press ▲ or ▼ to Turn Off. Press OK to select.
  The display shows ✓ beside Turn Off.

4.10.29.4

Changing Passwords

Follow the procedure to change passwords on your radio.

1 Press OK to access the menu.

2 Press ▲ or ▼ to Utilities. Press OK to select.

3 Press ▲ or ▼ to Radio Settings. Press OK to select.

4 Press ▲ or ▼ to Passwd Lock. Press OK to select.

5 Enter the current four-digit password, and press OK to proceed.

If the password is incorrect, the display shows Wrong Password and automatically returns to the previous menu.

6 Press ▲ or ▼ to Change PWD. Press OK to select.

7 Enter a new four-digit password, and press OK to proceed.

8 Re-enter the new four-digit password, and press OK to proceed.

If successful, the display shows Password Changed. If unsuccessful, the display shows Passwords Do Not Match.

The screen automatically returns to the previous menu.

4.10.30

Notification List

Your radio has a Notification list that collects all your unread events on the channel, such as unread text messages, telemetry messages, missed calls, and call alerts.

The display shows the **Notification** icon when the Notification list has one or more events.

The list supports a maximum of 40 unread events. When the list is full, the next event automatically replaces the oldest event. After the events are read, they are removed from the Notification list.

For text messages, missed calls, and call alert events, the maximum number of notifications are 30 text messages and 10 missed calls or call alerts. This maximum number depends on individual feature (job tickets or text messages or missed calls or call alerts) list capability.

4.10.30.1

Accessing Notification List

Follow the procedure to access the Notification list on your radio.

1. Press OK to access the menu.
2. Press ▲ or ▼ to `Notification`. Press OK to select.
3. Press ▲ or ▼ to the required event. Press OK to select.

   Long press ⌂ to return to the Home screen.

4.10.31

Over-the-Air Programming

Your dealer can remotely update your radio by using Over-the-Air Programming (OTAP) without physical connection. Additionally, some settings can also be configured by using OTAP.

When your radio undergoes OTAP, the green LED blinks.

When your radio receives high volume data:

- The display shows the **High Volume Data** icon.
- The channel becomes busy.
- A negative tone sounds if you press the **PTT** button.

When OTAP completes, depending on the configuration:

- A tone sounds. The display shows `Updating Restarting`. Your radio restarts by powering off and on again.
- You can select `Restart Now` or `Postpone`. When you select `Postpone`, your radio returns to the previous screen. The display shows the **OTAP Delay Timer** icon until the automatic restart occurs.

When your radio powers up after automatic restart:

- If successful, the display shows `Sw Update Completed`.
- If the program update is unsuccessful, a tone sounds, the red LED blinks once, and the display shows `Sw Update Failed`.

NOTICE:
If the programming update is unsuccessful, the software update failure indications appear every time you turn on your radio. Contact your dealer to reprogram your radio with the latest software to eliminate the software update failure indications.

See Checking Software Update Information on page 224 for the updated software version.

4.10.32

Selecting Third-Party Peripherals Connection Modes

Follow the procedure to select one of the following third-party peripherals connection modes:

- Motorola Solutions
- PC and Audio
- Data Accessory
- Telemetry
- Generic

1 Press OK to access the menu.

2 Press ▲ or ▼ to `Utilities`. Press OK to select.

3 Press ▲ or ▼ to `Radio Settings`. Press OK to select.

4 Press ▲ or ▼ to `Cable Type`. Press OK to select.

5 Press ▲ or ▼ to the required connection mode. Press OK to select.

The display shows the selected connection mode. The screen returns to the previous menu.

4.10.33

Received Signal Strength Indicator

This feature allows you to view the Received Signal Strength Indicator (RSSI) values.

The display shows the **RSSI** icon at the top right corner. See Display Icons for more information on the **RSSI** icon.

4.10.33.1

Viewing RSSI Values

Attach the 4-Way Navigation Keypad Microphone (Motorola Solutions part number RMN5127_) to your radio.

At the home screen, using the 4-Way Navigation Keypad Microphone, press ◀ three times and immediately press ▶ three times.

The display shows the current RSSI values.

To return to the home screen, press and hold ↩⌂ .

4.10.34

Front Panel Configuration

You are able to customize certain feature parameters in Front Panel Configuration (FPC) to enhance the use of your radio.

4.10.34.1

Entering Front Panel Configuration Mode

Long press ⮌ at any time to return to the Home screen.

1. Press OK to access the menu.
2. Press ▲ or ▼ to `Utilities`. Press OK to select.
3. Press ▲ or ▼ to `Program Radio`. Press OK to select.

4.10.34.2

Editing FPP Mode Parameters

Use the following buttons as required while navigating through the feature parameters.

- ▲ , ▼ – Scroll through options, increase/decrease values, or navigate vertically.
- OK – Select the option or enter a sub-menu.
- ⮌ – Short-press to return to previous menu or to exit the selection screen. Long-press to return to Home screen.

4.10.35

Wi-Fi Operation

This feature allows you to set up and connect to a Wi-Fi network. Wi-Fi supports updates for radio firmware, codeplug, and resources such as language packs and voice announcement.

NOTICE:
This feature is applicable to XiR M8668i/CM7668i only.

Wi-Fi® is a registered trademark of Wi-Fi Alliance®.

Your radio supports WEP/WPA/WPA2-Personal and WPA/WPA2-Enterprise Wi-Fi networks.

WEP/WPA/WPA2-Personal Wi-Fi network

Uses pre-shared key (password) based authentication.

Pre-shared key can be entered by using the menu or CPS/RM.

WPA/WPA2-Enterprise Wi-Fi network

Uses certificate-based authentication.

Your radio must be pre-configured with a certificate.

NOTICE:
Check with your dealer or system administrator to connect to WPA/WPA2-Enterprise Wi-Fi network.

The programmed **Wi-Fi On or Off** button is assigned by your dealer or system administrator. Check with your dealer or system administrator to determine how your radio has been programmed.

Voice Announcements for the programmed **Wi-Fi On or Off** button can be customized through CPS according to user requirements. Check with your dealer or system administrator for more information.

NOTICE:
You can turn on or turn off Wi-Fi remotely by using a designated radio (see Turning Wi-Fi On or Off Remotely by Using a Designated Radio (Individual Control) on page 196 and Turning Wi-Fi On or Off Remotely by Using a Designated Radio (Group Control) on page 196). Check with your dealer or system administrator for more information.

4.10.35.1

Turning Wi-Fi On or Off

1 Press the programmed **Wi-Fi On or Off** button.
Voice Announcement sounds Turning On Wi-Fi or Turning Off Wi-Fi.

2 Access this feature using the menu.

a Press OK to access the menu.

b Press ▲ or ▼ to `WiFi` and press OK to select.

c Press ▲ or ▼ to `WiFi On` and press OK to select.

d Press OK to turn on/off Wi-Fi.

If Wi-Fi is on, the display shows ✓ beside `Enabled`.

If Wi-Fi is off, the ✓ disappears from beside `Enabled`.

4.10.35.2

Turning Wi-Fi On or Off Remotely by Using a Designated Radio (Individual Control)

You can turn Wi-Fi on or off remotely in Individual Control (One to One).

NOTICE:
Only radio with specific CPS setting supports this function, check with your dealer or system administrator for more information.

1 Do one of the following:
   - Long press the programmable button. Use the keypad to enter the ID and press OK to select. Proceed to step 3.
   - Press OK to access the menu.

2 Press ▲ or ▼ to `Contacts` and press OK to select.

3 Press ▲ or ▼ to `WiFi Control` and press OK to select.

4 Press ▲ or ▼ to select `On` or `Off`.

5 Press OK to select.

If successful, the display shows a positive mini notice.

If unsuccessful, the display shows a negative mini notice.

4.10.35.3

Turning Wi-Fi On or Off Remotely by Using a Designated Radio (Group Control)

You can turn Wi-Fi on or off remotely in Group Control (One to Many).

NOTICE:
Only radio with specific CPS setting supports this function, check with your dealer or system administrator for more information.

1 Press OK to access the menu.

2 Press ▲ or ▼ to Contacts and press OK to select.

3 Press ▲ or ▼ to select the required subscriber alias or ID.

4 Press ▲ or ▼ to WiFi Control and press OK to select.

5 Press ▲ or ▼ to select On or Off.

6 Press OK to select.

If successful, the display shows Sent Successfully.

If unsuccessful, the display shows a negative mini notice.

4.10.35.4

Connecting to a Network Access Point

When you turn on Wi-Fi, the radio scans and connects to a network access point.

NOTICE:
You can also connect to a network access point using the menu.

The WPA-Enterprise Wi-Fi network access points are pre-configured. Check with your dealer or system administrator to determine how your radio has been programmed.

1 Press OK to access the menu.

2 Press ▲ or ▼ to WiFi and press OK to select.

3 Press ▲ or ▼ to Networks and press OK to select.

4 Press ▲ or ▼ to a network access point and press OK to select.

NOTICE:
For WPA-Enterprise Wi-Fi, if a network access point is not preconfigured, the `Connect` option is not available.

5 Press ▲ or ▼ to `Connect` and press OK to select.

6 For WPA-Personal Wi-Fi, enter the password and press OK .

7 For WPA-Enterprise Wi-Fi, password is configured by using RM.

If the preconfigured password is correct, your radio automatically connects to the selected network access point.

If the preconfigured password is incorrect, the display shows `Authentication Failure`, and automatically returns to the previous menu.

If the connection is successful, the radio displays a notice and the network access point is saved into the profile list.

If the connection is unsuccessful, the radio displays shows the failure notice screen momentarily and automatically returns to the previous menu.

4.10.35.5

Checking Wi-Fi Connection Status

Press the programmed **Wi-Fi Status Query** button for the connection status by using Voice Announcement. Voice Announcement sounds Wi-Fi is Off, Wi-Fi is On but No Connection, or Wi-Fi is On with Connection.

- The display shows `WiFi Off` when the Wi-Fi is turned off.
- The display shows `WiFi On, Connected` when the radio is connected to a network.
- The display shows `WiFi On, Disconnected` when the Wi-Fi is turned on but the radio is not connected to any network.

Voice Announcements for the Wi-Fi status query results can be customized through CPS according to user requirements. Check with your dealer or system administrator for more information.

NOTICE:
The programmed **Wi-Fi Status Query** button is assigned by your dealer or system administrator. Check with your dealer or system administrator to determine how your radio has been programmed.

4.10.35.6

Refreshing the Network List

- Perform the following actions to refresh the network list through the menu.

  a. Press OK to access the menu.

  b. Press ▲ or ▼ to `WiFi` and press OK to select.

  c. Press ▲ or ▼ to `Networks` and press OK to select.

  When you enter the Networks menu, the radio automatically refreshes the network list.

- If you are already in the Networks menu, perform the following action to refresh the network list.

  Press ▲ or ▼ to `Refresh` and press OK to select.

  The radio refreshes and displays the latest network list.

4.10.35.7

Adding a Network

NOTICE:
This task is not applicable to WPA-Enterprise Wi-Fi networks.

If a preferred network is not in the available network list, perform the following actions to add a network.

1 Press OK to access the menu.

2 Press ▲ or ▼ to WiFi and press OK to select.

3 Press ▲ or ▼ to Networks and press OK to select.

4 Press ▲ or ▼ to Add Network and press OK to select.

5 Enter the Service Set Identifier (SSID) and press OK .

6 Press ▲ or ▼ to Open and press OK to select.

7 Enter the password and press OK .

The radio displays a positive mini notice to indicate that the network is successfully saved.

Viewing Details of Network Access Points

You can view details of network access points.

1 Press OK to access the menu.

2 Press ▲ or ▼ to WiFi and press OK to select.

3 Press ▲ or ▼ to Networks and press OK to select.

4 Press ▲ or ▼ to a network access point and press OK to select.

5 Press ▲ or ▼ to View Details and press OK to select.

NOTICE:
WPA-Personal Wi-Fi and WPA-Enterprise Wi-Fi display different details of Network Access Points.

WPA-Personal Wi-Fi

For a connected network access point, your radio displays Service Set Identifier (SSID), Security Mode, Media Access Control (MAC) address, and Internet Protocol (IP) address.

For a non-connected network access point, your radio displays SSID and Security Mode.

WPA-Enterprise Wi-Fi

For a connected network access point, your radio displays SSID, Security Mode, Identity, Extended Authentication Protocol (EAP) Method, Phase 2 Authentication, Cert Name, MAC address, IP address, Gateway, DNS1, and DNS2.

For a non-connected network access point, your radio displays SSID, Security Mode, Identity, EAP Method, Phase 2 Authentication, and Cert Name.

4.10.35.9

Removing Network Access Points

NOTICE:
This task is not applicable to Enterprise Wi-Fi networks.

Perform the following actions to remove network access points from the profile list.

1 Press OK to access the menu.

2 Press ▲ or ▼ to WiFi and press OK to select.

3 Press ▲ or ▼ to Networks and press OK to select.

4 Press ▲ or ▼ to the selected network access point and press OK to select.

5 Press ▲ or ▼ to Remove and press OK to select.

6 Press ▲ or ▼ to `Yes` and press OK to select.

The radio displays a positive mini notice to indicate that the selected network access point is successfully removed.

4.10.36

Dynamic Group Number Assignment (DGNA)

Dynamic Group Number Assignment (DGNA) is a feature which allows the console to assign and remove a new talkgroup from your radio over the air.

When the console assigns DGNA to your radio, your radio is in DGNA mode:

- A tone sounds.
- The display shows `<DGNA Talkgroup Alias> Assigned` momentarily before returning to the home screen.
- The DGNA icon appears in the status bar.
- The home screen displays DGNA talkgroup alias.

When the console removes DGNA from your radio, your radio returns to the previous talkgroup:

- A tone sounds.
- The display shows `<DGNA Talkgroup Alias> Removed` momentarily before returning to the home screen.
- The DGNA icon disappears from the status bar.
- The home screen displays the previous talkgroup alias.

Depending on how your radio is programmed, you can view, edit, and listen to the original scan lists channels and the non-DGNA talkgroups.

When your radio is in DGNA mode, pressing the PTT button allows you to communicate only with the current DGNA talkgroup. To communicate with the previous non-DGNA talkgroup, program the **One Touch Access** button. See Making Non-DGNA Calls on page 203.

NOTICE:
Check with your dealer or system administrator to determine how your radio has been programmed.

4.10.36.1

Making DGNA Calls

When your radio is in DGNA mode, press the **PTT** button to make the call.

- A DGNA tone sounds.
- The display shows the DGNA icon and the DGNA talkgroup alias.

NOTICE:
If your radio is not in DGNA mode and you press the **One Touch Access** button, your radio sounds a tone, indicating error. The display remains unchanged.

4.10.36.2

Making Non-DGNA Calls

1 Press the programmed **One Touch Access** button.
   - A positive tone sounds.
   - Voice Announcement sounds One Touch Replaced Call.
   - The display shows `<Talkgroup Alias>` and `Press PTT` momentarily.

NOTICE:
If your radio is not in DGNA mode and you press the **One Touch Access** button, your radio sounds a negative tone, indicating error. The display remains unchanged.

2 Press **PTT** button before a negative tone sounds and your radio returns to the home screen.

NOTICE:
When your radio is in the home screen, a PTT press makes call to the DGNA talkgroup.

4.10.36.3

Receiving and Responding to DGNA Calls

When you receive a DGNA call:

- A DGNA tone sounds.
- The display shows the DGNA icon, DGNA talkgroup alias, and radio alias.

- Your radio unmutes and the incoming call sounds through the speaker.

1 Press the **PTT** button to respond to the call.

2 Release the **PTT** button to listen.

4.11

Utilities

This chapter explains the operations of the utility functions available in your radio.

4.11.1

Power Levels

You can customize the power setting to high or low for each channel.

High
This enables communication with radios located at a considerable distance from you.

Low
This enables communication with radios in closer proximity.

NOTICE:
This feature is not applicable in Citizens Band channels that are in the same frequency.

4.11.1.1

Setting Power Levels

Follow the procedure to set the power levels on your radio.

1 Do one of the following:
- Press the programmed **Power Level** button. Skip the steps below.
- Press OK to access the menu.

2 Press ▲ or ▼ to `Utilities`. Press OK to select.

3 Press ▲ or ▼ to `Radio Settings`. Press OK to select.

4 Press ▲ or ▼ to `Power`. Press OK to select.

5 Do one of the following:

- Press ▲ or ▼ to High. Press OK to select.
  The display shows ✓ beside High.
- Press ▲ or ▼ to Low. Press OK to select.
  The display shows ✓ beside Low.

6 Long press ⌂ to return to the Home screen.

4.11.2

Turning Radio Tones/Alerts On or Off

You can enable and disable all radio tones and alerts, if needed, except for incoming Emergency alert tone . Follow the procedure to turn tones and alerts on or off on your radio.

1 Do one of the following:

- Press the programmed **Tones/Alerts** button. Skip the following steps.
- Press OK to access the menu.

2 Press ▲ or ▼ to Utilities. Press OK to select.

3 Press ▲ or ▼ to Radio Settings. Press OK to select.

4 Press ▲ or ▼ to Tones/Alerts. Press OK to select.

5 Press ▲ or ▼ to All Tones. Press OK to select.

6 Press OK to enable or disable all tones and alerts. The display shows one of the following results:

- If enabled, ✓ appears beside Enabled.
- If disabled, ✓ disappears beside Enabled.

4.11.3

Turning Keypad Tones On or Off

Follow the procedure to turn keypad tones on or off on your radio.

1. Press OK to access the menu.
2. Press ▲ or ▼ to `Utilities`. Press OK to select.
3. Press ▲ or ▼ to `Radio Settings`. Press OK to select.
4. Press ▲ or ▼ to `Tones/Alerts`. Press OK to select.
5. Press ▲ or ▼ to `Keypad Tones`. Press OK to select.
6. Press OK to enable or disable keypad tones. The display shows one of the following results:
   - If enabled, ✓ appears beside `Enabled`.
   - If disabled, ✓ disappears beside `Enabled`.

4.11.4

Setting Tones/Alerts Volume Offset Levels

This feature adjusts the volume of the tones or alerts, allowing it to be higher or lower than the voice volume. Follow the procedure to set the tones and alerts volume offset levels on your radio.

1. Press OK to access the menu.
2. Press ▲ or ▼ to `Utilities`. Press OK to select.
3. Press ▲ or ▼ to `Radio Settings`. Press OK to select.
4. Press ▲ or ▼ to `Tones/Alerts`. Press OK to select.

5 Press ▲ or ▼ to `Vol. Offset`. Press OK to select.

6 Press ▲ or ▼ to the required volume offset level.

A feedback tone sounds with each corresponding volume offset level.

7 Do one of the following:

- Press OK to select. The required volume offset level is saved.
- Press ↩ to exit. The changes are discarded.

4.11.5

Turning Talk Permit Tone On or Off

Follow the procedure to turn Talk Permit Tone on or off on your radio.

1 Press OK to access the menu.

2 Press ▲ or ▼ to `Utilities`. Press OK to select.

3 Press ▲ or ▼ to `Radio Settings`. Press OK to select.

4 Press ▲ or ▼ to `Tones/Alerts`. Press OK to select.

5 Press ▲ or ▼ to `Talk Permit`. Press OK to select.

6 Press OK to enable or disable the Talk Permit Tone.

The display shows one of the following results:

- If enabled, ✓ appears beside `Enabled`.
- If disabled, ✓ disappears beside `Enabled`.

4.11.6

Turning Power Up Tone On or Off

Follow the procedure to turn Power Up Tone on or off on your radio.

1. Press OK to access the menu.
2. Press ▲ or ▼ to Utilities. Press OK to select.
3. Press ▲ or ▼ to Radio Settings. Press OK to select.
4. Press ▲ or ▼ to Tones/Alerts. Press OK to select.
5. Press ▲ or ▼ to Power Up. Press OK to select.
6. Press OK to enable or disable the Power Up Tone. The display shows one of the following results:
   - If enabled, ✓ appears beside Enabled.
   - If disabled, ✓ disappears beside Enabled.

4.11.7

Setting Text Message Alert Tones

You can customize the text message alert tone to Momentary or Repetitive for each entry in the Contacts list. Follow the procedure to set the text message alert tones on your radio.

1. Press OK to access the menu.
2. Press ▲ or ▼ to Contacts. Press OK to select.
3. Press ▲ or ▼ to the required alias or ID. Press OK to select.
4. Press ▲ or ▼ to Message Alert. Press OK to select.

5 Do one of the following:

- Press ▲ or ▼ to Momentary. Press OK to select.
  The display shows ✓ beside Momentary.
- Press ▲ or ▼ to Repetitive. Press OK to select.
  The display shows ✓ beside Repetitive.

4.11.8

Changing Display Modes

You can change the display mode of the radio between Day or Night, as needed. This feature affects the color palette of the display. Follow the procedure to change the display mode of your radio.

1 Do one of the following:

- Press the programmed **Display Mode** button. Skip the following steps.
- Press OK to access the menu.

2 Press ▲ or ▼ to Utilities. Press OK to select.

3 Press ▲ or ▼ to Radio Settings. Press OK to select.

4 Press ▲ or ▼ to Display. Press OK to select.

The display shows Day Mode and Night Mode.

5 Press ▲ or ▼ to the required setting. Press OK to select.

The display shows ✓ beside the selected setting.

4.11.9

Adjusting Display Brightness

Follow the procedure to adjust the display brightness on your radio. Display brightness cannot be adjusted when Auto Brightness is enabled.

1 Do one of the following:

- Press the programmed **Brightness** button. Skip the following steps.
- Press OK to access the menu.

2 Press ▲ or ▼ to `Utilities`. Press OK to select.

3 Press ▲ or ▼ to `Radio Settings`. Press OK to select.

4 Press ▲ or ▼ to `Brightness`. Press OK to select.

The display shows the progress bar.

5 Press ▲ or ▼ to decrease or increase the display brightness. Press OK to select.

The setting value is varied from 1 to 8.

4.11.10

Turning Horns/Lights On or Off

Your radio is able to notify you of an incoming call through the horns and lights feature. When activated, an incoming call sounds the horn and turns on the lights of your vehicle. This feature needs to be installed through your radio rear accessory connector by your dealer. Follow the procedure to turn all horns and lights on or off on your radio.

1 Do one of the following:

- Press the programmed **Horns/Lights** button. Skip the steps below.
- Press OK to access the menu.

2 Press ▲ or ▼ to `Utilities`. Press OK to select.

3 Press ▲ or ▼ to `Radio Settings`. Press OK to select.

4 Press ▲ or ▼ to Horns/Lights. Press OK to select.

5 Press OK to enable or disable Horns/Lights. The display shows one of the following results:

- If enabled, ✓ appears beside Enabled.
- If disabled, ✓ disappears beside Enabled.

4.11.11

Turning LED Indicators On or Off

Follow the procedure to turn the LED indicators on or off on your radio.

1 Press OK to access the menu.

2 Press ▲ or ▼ to Utilities. Press OK to select.

3 Press ▲ or ▼ to Radio Settings. Press OK to select.

4 Press ▲ or ▼ to LED Indicator. Press OK to select.

5 Press OK to enable or disable the LED indicator.

The display shows one of the following results:

- If enabled, ✓ appears beside Enabled.
- If disabled, ✓ disappears beside Enabled.

4.11.12

Turning Public Address System On or Off

Follow the procedure to enable or disable the internal public address (PA) system of your radio.

1 Do one of the following:

- Press the programmed **Public Address** button. Skip the following steps.
- Press OK to access the menu.

2 Press ▲ or ▼ to `Utilities`. Press OK to select.

3 Press ▲ or ▼ to `Radio Settings`. Press OK to select.

4 Press ▲ or ▼ to `Public Address`. Press OK to select.

5 Press OK to enable or disable Public Address.

- If enabled, ✓ appears beside `Enabled`.
- If disabled, ✓ disappears beside `Enabled`.

4.11.13

Turning External Public Address System On or Off

Follow the procedure to enable or disable the external public address (PA) system of your radio.

1 Do one of the following:

- Press the programmed **Ext Public Address** button. Skip the following steps.
- Press OK to access the menu.

2 Press ▲ or ▼ to `Utilities`. Press OK to select.

3 Press ▲ or ▼ to `Radio Settings`. Press OK to select.

4 Press ▲ or ▼ to `External Public Address`. Press OK to select.

5 Press OK to enable or disable external public address.

- If enabled, ✓ appears beside `Enabled`.
- If disabled, ✓ disappears beside `Enabled`.

4.11.14

Turning Introduction Screen On or Off

You can enable and disable the Introduction Screen by following the procedure.

1. Press OK to access the menu.
2. Press ▲ or ▼ to `Utilities`. Press OK to select.
3. Press ▲ or ▼ to `Radio Settings`. Press OK to select.
4. Press ▲ or ▼ to `Display`. Press OK to select.
5. Press ▲ or ▼ to `Intro Screen`. Press OK to select.
6. Press OK to enable or disable the Introduction Screen.

   The display shows one of the following results:

   - If enabled, ✓ appears beside `Enabled`.
   - If disabled, ✓ disappears beside `Enabled`.

4.11.15

Setting Languages

Follow the procedure to set the languages on your radio.

1. Press OK to access the menu.
2. Press ▲ or ▼ to `Utilities`. Press OK to select.
3. Press ▲ or ▼ to `Radio Settings`. Press OK to select.

4 Press ▲ or ▼ to `Languages`. Press OK to select.

5 Press ▲ or ▼ to the required language. Press OK to select.

The display shows ✓ beside the selected language.

4.11.16

Identifying Cable Type

Do the following steps to select the type of cable your radio uses.

1 Press OK to access the menu.

2 Press ▲ or ▼ to `Utilities`. Press OK to select.

3 Press ▲ or ▼ to `Radio Settings`. Press OK to select.

4 Press ▲ or ▼ to `Cable Type`. Press OK to select.

5 The current cable type is indicated by a ✓ .

4.11.17

Turning Voice Announcement On or Off

This feature enables the radio to audibly indicates the current zone or channel the user has just assigned, or the programmable button the user has just pressed.

This is typically useful when the user has difficulty reading the content shown on the display.

This audio indicator can be customized according to customer requirements. Follow the procedure to turn Voice Announcement on or off on your radio.

4.11.18

Turning Option Board On or Off

Option board capabilities within each channel can be assigned to programmable buttons. A channel can support up to 6 option board features. Follow the procedure to turn option board on or off on your radio.

Press the programmed **Option Board** button.

4.11.19

Text-to-Speech

The Text-to-Speech feature can only be enabled by your dealer. If Text-to-Speech is enabled, the Voice Announcement feature is automatically disabled. If Voice Announcement is enabled, then the Text-to-Speech feature is automatically disabled.

This feature enables the radio to audibly indicate the following features:

- Current Channel
- Current Zone
- Programmed button feature on or off
- Content of received text messages
- Content of received Job Tickets

This audio indicator can be customized per customer requirements. This feature is typically useful when the user is in a difficult condition to read the content shown on the display.

4.11.19.1

Setting Text-to-Speech

Follow the procedure to set the Text-to-Speech feature.

1. Press OK to access the menu.
2. Press ▲ or ▼ to `Utilities`. Press OK to select.
3. Press ▲ or ▼ to `Radio Settings`. Press OK to select.
4. Press ▲ or ▼ to `Voice Announcement`. Press OK to select.

5 Press ▲ or ▼ to any of the following features. Press OK to select.

The available features are as follows:

- All
- Messages
- Job Tickets
- Channel
- Zone
- Program Button

✓ appears beside the selected setting.

4.11.20

Setting Menu Timer

You can set the time your radio stays in the menu before it automatically switches to the Home screen. Follow the procedure to set the menu timer.

1 Press OK to access the menu.

2 Press ▲ or ▼ to Utilities. Press OK to select.

3 Press ▲ or ▼ to Radio Settings. Press OK to select.

4 Press ▲ or ▼ to Display. Press OK to select.

5 Press ▲ or ▼ to Menu Timer. Press OK to select.

6 Press ▲ or ▼ to the required setting. Press OK to select.

4.11.21

Turning Digital Microphone AGC On or Off

The Digital Microphone Automatic Gain Control (AGC) controls the microphone gain of the radio automatically while transmitting on a digital system.
This feature suppresses loud audio or boosts soft audio to a preset value in order to provide a consistent level of audio. Follow the procedure to turn Digital Microphone AGC on or off on your radio.

1. Press OK to access the menu.
2. Press ▲ or ▼ to `Utilities`. Press OK to select.
3. Press ▲ or ▼ to `Radio Settings`. Press OK to select.
4. Press ▲ or ▼ to `Mic AGC-D`. Press OK to select.
5. Press OK to enable or disable Digital Microphone AGC.

   The display shows one of the following results:

   - If enabled, ✓ appears beside `Enabled`.
   - If disabled, ✓ disappears beside `Enabled`.

4.11.22

Turning Intelligent Audio On or Off

Your radio automatically adjusts the audio volume to overcome current background noise in the environment, inclusive of both stationary and non-stationary noise sources. This is a receive-only feature and does not affect transmission audio. Follow the procedure to turn Intelligent Audio on or off on your radio.

NOTICE:
This feature is not applicable during a Bluetooth session.

1. Do one of the following:

- Press the programmed **Intelligent Audio** button. Skip the steps below.
- Press OK to access the menu.

2 Press ▲ or ▼ to Utilities. Press OK to select.

3 Press ▲ or ▼ to Radio Settings. Press OK to select.

4 Press ▲ or ▼ to Intelligent Audio. Press OK to select.

5 Do one of the following:

- Press ▲ or ▼ to On. Press OK to select. The display shows ✓ beside On.
- Press ▲ or ▼ to Off. Press OK to select. The display shows ✓ beside Off.

Turning the Acoustic Feedback Suppressor Feature On or Off

This feature allows you to minimize acoustic feedback in received calls.

1 Press OK to access the menu.

2 Press ▲ or ▼ to Utilities and press OK to select.

3 Press ▲ or ▼ to Radio Settings and press OK to select.

4 Press ▲ or ▼ to AF Suppressor and press OK to select.

You can also use or buttons to change the selected option.

5 Do one of the following.

- Press OK to enable Acoustic Feedback Suppressor. The display shows ✓ beside Enabled.
- Press OK to disable Acoustic Feedback Suppressor. The ✓ disappears from beside Enabled.

4.11.24

Turning Trill Enhancement On or Off

You can enable this feature when you are speaking in a language that contains many words with alveolar trill (rolling "R") pronunciations. Follow the procedure to turn Trill Enhancement on or off on your radio.

1 Do one of the following:
- Press the programmed **Trill Enhancement** button. Skip the steps below.
- Press OK to access the menu.

2 Press ▲ or ▼ to Utilities. Press OK to select.

3 Press ▲ or ▼ to Radio Settings. Press OK to select.

4 Press ▲ or ▼ to Trill Enhance. Press OK to select.

5 Do one of the following:
- Press ▲ or ▼ to On. Press OK to select. The display shows ✓ beside On.
- Press ▲ or ▼ to Off. Press OK to select. The display shows ✓ beside Off.

4.11.25

Audio Ambience

You can customize the audio ambience for your radio according to your environment.

Default

This is the default setting.

Loud

This setting enables Noise Suppressor and increases speaker loudness for use in noisy surroundings.

Work Group

This setting enables AF Suppressor and disables AGC for use when a group of radios are near to each other.

4.11.25.1

Setting Audio Ambience

Follow the procedure to set the audio ambience on your radio according to your environment.

1. Press OK to access the menu.
2. Press ▲ or ▼ to `Utilities`. Press OK to select.
3. Press ▲ or ▼ to `Radio Settings`. Press OK to select.
4. Press ▲ or ▼ to `Audio Ambience`. Press OK to select.
5. Press ▲ or ▼ to the required setting. Press OK to select.

   The settings are as follows.

   - Choose `Default` for the default factory settings.
   - Choose `Loud` to increase speaker loudness when using in noisy surroundings.
   - Choose `Work Group` to reduce acoustic feedback when using with a group of radios that are near to each other.

   The display shows ✓ beside the selected setting.

4.11.26

Audio Profiles

You can customize the audio profiles for your radio according to your preference.

Default
This is the default setting.

Level 1, Level 2, and Level 3
These settings are intended to compensate for noise-induced hearing loss that is typical for adults in their 40's, 50's, and 60's or over.

Treble Boost, Mid Boost, and Bass Boost
These settings are intended for a tinnier sound, a more nasal sound, and a deeper sound.

4.11.26.1

Setting Audio Profiles

Follow the procedure to set audio profiles on your radio.

1 Press OK to access the menu.

2 Press ▲ or ▼ to `Utilities`. Press OK to select.

3 Press ▲ or ▼ to `Radio Settings`. Press OK to select.

4 Press ▲ or ▼ to `Audio Profiles`. Press OK to select.

5 Press ▲ or ▼ to the required setting. Press OK to select.

The settings are as follows.

- Choose `Default` to disable the previously selected audio profile and return to the default factory settings.
- Choose `Level 1`, `Level 2`, or `Level 3` for audio profiles intended to compensate for noise-induced hearing loss that is typical for adults over 40 years of age.
- Choose `Treble Boost`, `Mid Boost`, or `Bass Boost` for audio profiles that align with your preference for tinnier, more nasal, or deeper sounds.

The display shows ✓ beside the selected setting.

4.11.27

Turning Global Navigation Satellite System On or Off

Global Navigation Satellite System (GNSS) is a satellite navigation system that determines the radio precise location. GNSS includes Global Positioning System (GPS) and BeiDou Navigation Satellite System (BDS).

NOTICE:
Selected radio models may offer GPS and BDS. GNSS constellation is configured by using CPS. Check with your dealer or system administrator to determine how your radio has been programmed.

1

2 Do one of the following steps to toggle GNSS on or off on your radio.

- Press the programmed **GNSS** button.
- Press OK to access the menu. Proceed to the next step.

3 Press ▲ or ▼ to `Utilities`. Press OK to select.

4 Press ▲ or ▼ to `Radio Settings`. Press OK to select.

5 Press ▲ or ▼ to `GNSS`. Press OK to select.

6 Press OK to enable or disable GNSS.

If enabled, ✓ appears beside `Enabled`.
If disabled, ✓ disappears beside `Enabled`.

4.11.28

General Radio Information

Your radio contains information on various general parameters.

The general information of your radio is as follows:

- Radio alias and ID.
- Firmware and Codeplug versions.

- Software update.
- GNSS information.
- Site information.

NOTICE:

Press to return to the previous screen. Long press to return to the Home screen. The radio exits the current screen once the inactivity timer expires.

4.11.28.1

Checking Radio Alias and ID

1 Do one of the following:

- Press the programmed **Radio Alias and ID** button. Skip the following steps.
  A positive indicator tone sounds.

  You can press the programmed **Radio Alias and ID** button to return to the previous screen.

- Press OK to access the menu.

2 Press or to `Utilities`. Press OK to select.

3 Press or to `Radio Info`. Press OK to select.

4 Press or to `My ID`. Press OK to select.

The first text line shows the radio alias. The second text line shows the radio ID.

4.11.28.2

Checking Firmware and Codeplug Versions

1 Press OK to access the menu.

2 Press or to `Utilities`. Press OK to select.

3 Press ▲ or ▼ to Radio Info. Press OK to select.

4 Press ▲ or ▼ to Versions. Press OK to select.

The display shows the current firmware and codeplug versions.

4.11.28.3

Checking Software Update Information

This feature shows the date and time of the latest software update carried out through OTAP or Wi-Fi. Follow the procedure to check the software update information on your radio.

1 Press OK to access the menu.

2 Press ▲ or ▼ to Utilities. Press OK to select.

3 Press ▲ or ▼ to Radio Info. Press OK to select.

4 Press ▲ or ▼ to SW Update. Press OK to select.

The display shows the date and time of the latest software update.

Software Update menu is only available after at least one successful OTAP or Wi-Fi session. See Over-the-Air Programming on page 482 for more information.

4.11.28.4

Checking GNSS Information

Displays the GNSS information on your radio, such as values of:

- Latitude
- Longitude
- Altitude
- Direction
- Velocity

- Horizontal Dilution of Precision (HDOP)
- Satellites
- Version

1. Press OK to access the menu.
2. Press ▲ or ▼ to Utilities. Press OK to select.
3. Press ▲ or ▼ to Radio Info. Press OK to select.
4. Press ▲ or ▼ to GNSS Info. Press OK to select.
5. Press ▲ or ▼ to the required item. Press OK to select. The display shows the requested GNSS information.

4.11.28.5

Displaying Site Information

Follow the procedure to display the current site name your radio is on.

1. Press OK to access the menu.
2. Press ▲ or ▼ to Utilities. Press OK to select.
3. Press ▲ or ▼ to Radio Info. Press OK to select.
4. Press ▲ or ▼ to Site Info. Press OK to select.

The display shows the current site name.

4.11.29

Viewing Enterprise Wi-Fi Certificate Details

You can view the details of the selected Enterprise Wi-Fi Certificate.

1. Press OK to access the menu.
2. Press ▲ or ▼ to `Utilities`. Press OK to select.
3. Press ▲ or ▼ to `Certificate Menu`. Press OK to select.

   ✓ appears beside ready certificates.
4. Press ▲ or ▼ to the required certificate.

   Press OK to select.

Your radio displays the full details of the certificate.

NOTICE:
For unready certificates, the display shows only Status.

Connect Plus

Connect Plus is a full trunking solution based on DMR technology. Connect Plus uses a dedicated control channel for channel requests and allocations.

5.1

Additional Radio Controls in Connect Plus Mode

This chapter explains the additional radio controls available to the radio user through preprogrammed means such as programmable buttons and assignable radio functions.

5.1.1

Push-To-Talk (PTT) Button

The **PTT** button on the side of the radio serves two basic purposes:

- While a call is in progress, the **PTT** button allows the radio to transmit to other radios in the call.

  Press and hold the **PTT** button to talk. Release the **PTT** button to listen.

  The microphone is activated when the **PTT** button is pressed.

- While a call is not in progress, the **PTT** button is used to make a new call (see Making a Radio Call on page 244).

If the Talk Permit Tone is enabled, wait until the short alert tone ends before talking.

5.1.2

Programmable Buttons

Your dealer can program the programmable buttons as shortcuts to radio functions depending on the duration of a button press:

Short press
Pressing and releasing rapidly.

Long press
Pressing and holding for the programmed duration.

NOTICE:
The programmed duration of a button press is applicable for all assignable radio/utility functions or settings. See Emergency Operation on page 279 for more information on the programmed duration of the *Emergency* button.

5.1.2.1

Assignable Radio Functions

Bluetooth® Audio Switch
Toggles audio routing between internal radio speaker and external Bluetooth-enabled accessory.

Bluetooth Connect
Initiates a Bluetooth find-and-connect operation.

Bluetooth Disconnect
Terminates all existing Bluetooth connections between your radio and any Bluetooth-enabled devices.

Bluetooth Discoverable
Enables your radio to enter Bluetooth Discoverable Mode.

Busy Queue Cancellation
Exits the busy mode when a non-Emergency call in the Busy Queue was initiated. Emergency calls, once accepted into the Busy Queue, cannot be cancelled.

Call Log
Selects the call log list.

Channel Announcement
Plays zone and channel announcement voice messages for the current channel.

Contacts
Provides direct access to the Contacts list.

Emergency On/Off
Depending on the programming, initiates or cancels an emergency.

Horns/Lights
Toggles horns and lights feature on or off.

Indoor Location
Toggles Indoor Location on or off.

Intelligent Audio
Toggles intelligent audio on or off.

Manual Dial
Depending on the programming, initiates a Private or Phone Call by keying in any subscriber ID or phone number.

One Touch Access
Directly initiates a predefined Private Call, a Call Alert, a Quick Text message, or Home Revert.

Privacy
Toggles privacy on or off.

Radio Check
Determines if a radio is active in a system.

Radio Enable
Allows a target radio to be remotely enabled.

Radio Disable
Allows a target radio to be remotely disabled.

Remote Monitor
Turns on the microphone of a target radio without it giving any indicators.

Reset Home Channel
Sets a new home channel.

Ring Alert Type
Provides direct access to the Ring Alert Type Setting.

Roam Request
Requests to search for a different site.

Scan
Toggles scan on or off.

Silence Home Channel Reminder
Mutes the Home Channel Reminder.

Site Lock On/Off
When toggled on, the radio searches the current site only. When toggled off, the radio searches other sites in addition to the current site.

Text Message
Selects the text message menu.

Voice Announcement On/Off
Toggles voice announcement on or off.

Wi-Fi
Toggles Wi-Fi on or off.

Zone
Allows selection from a list of zones.

5.1.2.2
Assignable Settings or Utility Functions

AF Suppressor
Toggles the Acoustic Feedback Suppressor feature on or off.

All Tones/Alerts
Toggles all tones and alerts on or off.

Backlight Brightness
Adjusts the brightness level.

Channel Up/Down
Depending on the programming, changes channel to previous or next channel.

Display Mode
Toggles the day/night display mode on or off.

Global Navigation Satellite System (GNSS)
Toggles the satellite navigation system on or off.

Power Level
Toggles transmit power level between high and low.

Unassigned
Indicates that the button function has not yet been assigned.

5.1.3

Identifying Status Indicators in Connect Plus Mode

5.1.3.1

Display Icons

The following are icons that appear on the display of the radio.

	Received Signal Strength Indicator (RSSI) The number of bars displayed represents the radio signal strength. Four bars indicate the strongest signal. This icon is only displayed while receiving.
	Bluetooth Not Connected The Bluetooth feature is enabled but there is no remote Bluetooth device connected.
	Bluetooth Connected The Bluetooth feature is enabled. The icon stays lit when a remote Bluetooth device is connected.
	High Volume Data Radio is receiving high volume data and channel is busy.
	Indoor Location Available [4] Indoor location status is on and available.
	Indoor Location Unavailable [4]

[4] Only applicable for models with the latest software and hardware

	Indoor location status is on but unavailable due to Bluetooth disabled or Beacons Scan suspended by Bluetooth.
	Mute Mode Mute Mode is enabled and speaker is muted.
	Notification Notification List has items to review.
L or H	**Power Level** Radio is set at Low power or Radio is set at High power.
	Tones Disable Tones are turned off.
	Option Board The Option Board is enabled.
	Option Board Non-Function The Option Board is disabled.

	GNSS Available The GPS/GNSS feature is enabled. The icon stays lit when a position fix is available.
	GNSS Not Available/Out of Range The GPS/GNSS feature is enabled but is not receiving data from the satellite.
	BeiDou Only Available [5] BeiDou Only feature is enabled. The icon stays lit when a position fix is available.
	Scan Scan feature is enabled.
	Emergency Radio is in Emergency mode.
	Secure The Privacy feature is enabled.

[5] Only applicable for XiR M8660i/XiR M8668i/CM7668i

	Unsecure The Privacy feature is disabled.
	Site Roaming The site roaming feature is enabled.
	Contact Radio contact is available.
	Call Log Radio call log.
	Message Incoming message.
	Ring Only Ringing mode is enabled.
	Silent Ring Silent ring mode is enabled.
	Vibrate Vibrate mode is enabled.

	Vibrate and Ring Vibrate and Ring mode is enabled.
	Wi-Fi Excellent [6] Wi-Fi signal is excellent.
	Wi-Fi Good [6] Wi-Fi signal is good.
	Wi-Fi Average [6] Wi-Fi signal is average.
	Wi-Fi Poor [6] Wi-Fi signal is poor.
	Wi-Fi Unavailable [6] Wi-Fi signal is unavailable.

[6] Only applicable for XiR M8668i/CM7668i

5.1.3.2

Call Icons

The following icons appear on your radio display during a call. These icons also appear in the Contacts list to indicate ID type.

	Private Call Indicates a Private Call in progress. In the Contacts list, it indicates a subscriber alias (name) or ID (number).
	Group Call/Site All Call Indicates a Group Call or Site All Call in progress. In the Contacts list, it indicates a group alias (name) or ID (number).
	Phone Call as Private Call Indicates a Phone Call as Private Call in progress.
	Bluetooth PC Call Indicates a Bluetooth PC Call in progress.
	In the Contacts list, it indicates a Bluetooth PC Call alias (name) or ID (number).
	Dispatch Call The Dispatch Call contact type is used to send a text message to a dispatcher PC through a third-party Text Message Server.

5.1.3.3

Advanced Menu Icons

The following icons appear beside menu items that offer a choice between two options or as an indication that there is a sub-menu offering two options.

	Checkbox (Empty) Indicates the option is not selected.
	Checkbox (Checked) Indicates the option is selected.
	Solid Black Box

	Indicates the option selected for the menu item with a sub-menu.

5.1.3.4

Sent Item Icons

The following icons appear at the top right corner of the radio display in the Sent Items folder.

OR	**Sent Successfully** The text message is sent successfully.
OR	**In-Progress** • The text message to a group alias or ID is pending transmission. • The text message to a subscriber alias or ID is pending transmission, followed by waiting for acknowledgement.

OR	**Individual or Group Message Read** The text message has been read.
OR	**Individual or Group Message Unread** The text message has not been read.
OR	**Send Failed** The text message has not been sent.

5.1.3.5

Bluetooth Device Icons

The following icons also appear next to items in the list of Bluetooth-enabled devices available to indicate the device type.

	Bluetooth Data Device Bluetooth-enabled data device, such as a scanner.
	Bluetooth Audio Device Bluetooth-enabled audio device, such as a headset.
	Bluetooth PTT Device Bluetooth-enabled PTT device, such as a PTT-Only Device (POD).
	Bluetooth Sensor Device Bluetooth-enabled sensor device, such as gas sensor.

5.1.3.6

LED Indicator

The LED indicator shows the operational status of your radio.

Blinking red	Radio is transmitting at low battery condition, receiving an emergency transmission or has failed the self-test upon powering up, or has moved out of range if radio is configured with Auto-Range Transponder System. Mute Mode is enabled.
Rapidly blinking red	Radio is receiving over-the-air file transfer (Option Board firmware file, Network Frequency file or Option Board Codeplug file) or upgrading to a new Option Board firmware file.
Blinking green and yellow	Radio is receiving a Call Alert, received a text message or Scan is enabled and is receiving activity.
Solid yellow	Radio is in Bluetooth Discoverable Mode.

Double blinking yellow	Radio is actively searching for a new site.
Blinking yellow	Radio is receiving a Call Alert or Scan is enabled and is idle (radio will remain muted to any activity).
Solid green	Radio is powering up or transmitting.
Blinking green	Radio is powering up, receiving a call or data.
Double blinking green	Radio is receiving a privacy-enabled call.

5.1.3.7

Indicator Tones

The following are the tones that sound through the radio speaker.

High pitched tone	□	Low pitched tone	■

Indicator tones provide you with audible indications of the status after an action to perform a task is taken.

■□	Positive Indicator Tone
□■	Negative Indicator Tone

5.1.3.8

Alert Tones

Alert tones provide you with audible indications of the status, or response to data received on the radio.

Continuous Tone ■	A monotone sound. Sounds continuously until termination.
Periodic Tone □□	Sounds periodically depending on the duration set by the radio. Tone starts, stops, and repeats itself.
Repetitive Tone □	A single tone that repeats itself until it is terminated by the user.
Momentary Tone ■	Sounds only once for a short period of time defined by the radio.

5.1.4

Switching Between Connect Plus and Non-Connect Plus Modes

To switch to a non-Connect Plus mode, you must change to another zone, if programmed by your dealer or system administrator. Check with your dealer or system administrator to see if your radio has been programmed with non-Connect Plus zones, and what features are available while operating in non-Connect Plus zones.

5.2

Making and Receiving Calls in Connect Plus Mode

This section explains general radio operations and call features that are available in your radio.

5.2.1

Selecting a Site

A site provides coverage for a specific area. A Connect Plus site has a site controller and a maximum of 15 repeaters. In a multi-site network, the Connect Plus radio will automatically search for a new site when the signal level from the current site drops to an unacceptable level.

5.2.1.1

Roam Request

A Roam Request tells the radio to search for a different site, even if the signal from the current site is acceptable.

If there are no sites available:

- The radio displays `Searching` and `Selected Channel Alias` and continues to search through the list of sites.
- The radio will return to the previous site, if the previous site is still available.

NOTICE:
This is programmed by your dealer.

Press the programmed **Roam Request** button.

You hear a tone, indicating the radio has switched to a new site. The display shows `Site ID <Site Number>`.

5.2.1.2

Site Lock On/Off

When toggled on, the radio searches the current site only. When toggled off, the radio searches other sites in addition to the current site.

Press the programmed **Site Lock** button.

If the **Site Lock** function is toggled on:

- You hear a positive indicator tone, indicating the radio has locked to the current site.
- The display shows `Site Locked`.

If the **Site Lock** function is toggled off:

- You hear a negative indicator tone, indicating the radio is unlocked.
- The display shows `Site Unlocked`.

5.2.1.3

Site Restriction

Your Connect Plus radio system administrator has the ability to decide which network sites your radio is and is not allowed to use. Your radio does not need to be reprogrammed to change the list of allowed and disallowed sites. If your radio attempts to register at a disallowed site, you see a brief message stating: `Site <number given> Not Allowed`. The radio then searches for a different network site.

5.2.2

Selecting a Zone

The radio can be programmed with a maximum of 16 Connect Plus Zones and each Connect Plus zone contains a maximum of 16 assignable positions on the Channel Selector Knob.

Each assignable knob position can be used to start one of the following voice call types:

- Group Call
- Multi-group Call
- Site All Call
- Private Call

1 Access the Zone feature by performing the following:

Radio Controls	Steps
Programmed Zone Selection button	Press the programmed **Zone Selection** button.
Radio menu	**a** Press OK to access the menu. **b** Press ▲ or ▼ to `Zone` and press OK to select.

The current zone is displayed and indicated by a ✓ .

2 Select the required zone.

Radio Control	Steps
▲ **or** ▼	Press ▲ or ▼ and scroll to the required zone.

3 Press OK to select.

The display shows `<Zone> Selected` momentarily and returns to the selected zone screen.

5.2.3

Using Multiple Networks

If your radio has been programmed to use multiple Connect Plus networks, you can select a different network by switching to the Connect Plus zone that is assigned to the desired network. These network-to-zone assignments are configured by your dealer through radio programming.

5.2.4

Selecting a Call Type

Use the Channel Selector Knob to select a call type. This can be a Group Call, Multi-group Call, Site All Call or Private Call, depending on how your radio is programmed. If you change the Channel Selector Knob to a different position (that has a call type assigned to it), this causes the radio to re-register with the Connect Plus site. The radio registers with the Registration Group ID that has been

programmed for the new Channel Selector Knob position call type.

If you select a position that has no call type assigned to it, your radio sounds a continuous tone and the display shows `Unprogrammed`. Your radio does not operate when selected to an unprogrammed channel, use the Channel Selector Knob to select a programmed channel instead.

Once the required zone is displayed (if you have multiple zones in your radio), turn the programmed Channel Selector Knob to select the call type.

5.2.5

Receiving and Responding to a Radio Call

Once the channel, subscriber ID or call type is displayed, you can proceed to receive and respond to calls.

The LED lights up solid green while the radio is transmitting and blinks green when the radio is receiving.

NOTICE:
The LED lights up solid green while the radio is transmitting and double blinks green when the radio is receiving a privacy-enabled call. To unscramble a privacy-enabled call, your radio must have the same Privacy Key, OR the same Key Value and Key ID (programmed by your dealer), as the transmitting radio (the radio you are receiving the call from).

See Privacy on page 298 for more information.

5.2.5.1

Receiving and Responding to a Group Call

To receive a call from a group of users, your radio must be configured as part of that group.

When you receive a Group Call (while on the Home screen), the LED blinks green.The Group Call icon appears in the top right corner. The first text line shows the caller alias. The second text line displays the group call alias.

Your radio unmutes and the incoming call sounds through the radio speaker.

1. Hold the microphone 1 to 2 inches (2.5 to 5.0 cm) from your mouth.

   The LED lights up solid green.

2. Wait for one of the Talk Permit Tone to finish (if enabled), and speak clearly into the microphone.

3. Release the **PTT** button to listen.

   If there is no voice activity for a predetermined period of time, the call ends.

NOTICE:
See Making a Group Call on page 245 for details on making a Group Call.

5.2.5.2

Receiving and Responding to a Private Call

A Private Call is a call from an individual radio to another individual radio.

When you receive a Private Call, the LED blinks green. The first line of the display shows the subscriber alias or ID, and the RSSI icon. The second line displays `Private Call` and the Private Call icon. Your radio unmutes and the incoming call sounds through the speaker of the radio.

1. Hold the microphone 1 to 2 inches (2.5 to 5.0 cm) from your mouth.

2. Press the **PTT** button to respond to the call.

   The LED lights up solid green.

3. Wait for the Talk Permit Tone to finish (if enabled), and speak clearly into the microphone.

4. Release the **PTT** button to listen.

If there is no voice activity for a predetermined period of time, the call ends.

The display shows `Call Ended`.

See Making a Private Call on page 245 for details on making a Private Call.

5.2.5.3

Receiving a Site All Call

A Site All Call is a call from an individual radio to every radio on the site. It is used to make important announcements requiring the user's full attention.

When you receive an Site All Call, a tone sounds and the LED blinks green.

The Group Call icon appears in the top right corner. The first text line shows the caller alias. The second text line displays `Site All Call`. Your radio unmutes and the incoming call sounds through the radio speaker.

Once the Site All Call ends, the radio returns to the previous screen before receiving the call. A Site All Call does not wait for a predetermined period of time before ending.

You cannot respond to a Site All Call.

NOTICE:
See Making a Site All Call on page 246 for details on making a Site All Call.

The radio stops receiving the Site All Call if you switch to a different channel while receiving the call. During a Site All Call, you will not be able to use any programmed button functions until the call ends.

5.2.5.4

Receiving an Inbound Private Phone Call

When you receive an Inbound Private Phone Call, the Phone Call as Private Call icon appears in the top right corner. The first text line shows `Phone Call`.

1. Press and hold the **PTT** button to answer and talk. Release the **PTT** button to listen.

2. Long press to end the call.

   The first line of the display shows `Ending`. The second line of the display shows `Phone Call....`. The display returns to the Phone Call screen. The display shows `Phone Call Ended`.

5.2.5.4.1

Making a Buffered Over-Dial in an Inbound Phone Private Call

During the call, the Phone Call as Private Call icon appears in the top right corner. The first text line of the display shows `Phone Call`.

1 Use the keypad to enter the digits and press the OK button.

Press * followed by # within 2 seconds to insert a pause. The `P` replaces * and # on the display.

The Phone Call as Private Call icon appears in the top right corner. The first text line of the display shows the entered digits.

2 Long press to end the call.

The first line of the display shows `Ending`. The second line of the display shows `Phone Call....` The display returns to the Phone Call screen.

The display shows `Phone Call Ended`.

5.2.5.4.2

Making a Live Over-Dial in an Inbound Phone Private Call

During the call, the Phone Call as Private Call icon appears in the top right corner. The first text line of the display shows `Phone Call`.

1 Press the **PTT** button and use the keypad to enter the digits.

The Phone Call as Private Call icon appears in the top right corner. The first text line of the display shows the Live Dial digits.

2 Long press to end the call.

The first line of the display shows `Ending`. The second line of the display shows `Phone Call....` The display returns to the Phone Call screen.

The display shows `Phone Call Ended`.

5.2.5.5

Receiving an Inbound Phone Talkgroup Call

When you receive an Inbound Phone Talkgroup Call, the Group Call icon appears in the top right corner. The first text line shows `Call1`.

Press the **PTT** button to talk and release it to listen.

5.2.5.6

Inbound Phone Multi-Group Call

When you receive an Inbound Phone Multi-Group Call, the Group Call icon appears in the top right corner. The first text line shows `Multigroup Call`. The radio unmutes and the incoming multi-group call sounds through the radio speaker.

5.2.6

Making a Radio Call

After selecting your channel, you can select a subscriber alias or ID, or group alias or ID by using:

- The Channel Selector Knob.
- A programmed **One Touch Access** button – The One Touch Access feature allows you to make a Private Call to a predefined ID easily. This feature can be assigned to a short or long programmable button press. You can only have one ID assigned to a **One Touch Access** button. Your radio can have multiple **One Touch Access** buttons programmed.
- The Contacts list (see Contacts Settings on page 267).

NOTICE:
Your radio must have the Privacy feature enabled on the channel to send a privacy-enabled transmission. Only target radios with the same Key Value and Key ID as your radio will be able to unscramble the transmission.

See Privacy on page 298 for more information.

5.2.6.1

Making a Call with the Channel Selector Knob

This feature allows the radio users to make different call types : Group Call, Private Call, Site All Call, Multi-group Call.

5.2.6.1.1

Making a Group Call

To make a call to a group of users, your radio must be configured as part of that group.

1 Select the channel with the active group alias or ID. See Selecting a Call Type on page 239.

2 Hold the microphone 1 to 2 inches (2.5 to 5.0 cm) from your mouth.

3 Press the **PTT** button to make the call.

The LED lights up solid green. The Group Call icon appears in the top right corner. The first text line shows the group call alias.

4 Wait for the Talk Permit Tone to finish (if enabled), and speak clearly into the microphone.

5 Release the **PTT** button to listen.

When the target radio responds, the LED blinks green, the radio unmutes and the response sounds through the radio speaker. You see the Group Call icon, the group alias or ID, and transmitting radio alias or ID on your display.

If there is no voice activity for a predetermined period of time, the call ends. Radio returns to the screen you were on prior to initiating the call.

5.2.6.1.2

Making a Private Call

While you can receive and/or respond to a Private Call initiated by an authorized individual radio, your radio must be programmed for you to initiate a Private Call.

You will hear a negative indicator tone, when you make a Private Call using the **One Touch Access** button, or the Channel Selector Knob, if this feature is not enabled.

1 Do one of the following.

- Select the channel with the active subscriber alias or ID. See Selecting a Call Type on page 239.
- Press the programmed **One Touch Access** button.

2 Hold the microphone 1 to 2 inches (2.5 to 5.0 cm) from your mouth.

3 Press the **PTT** button to make the call.

The LED lights up solid green. The Private Call icon appears on the top right corner. The first text line shows the target subscriber alias. The second text line displays the call status.

4 Wait for the Talk Permit Tone to finish (if enabled), and speak clearly into the microphone.

5 Release the **PTT** button to listen.

When the target radio responds, the LED blinks green.

If there is no voice activity for a predetermined period of time, the call ends. You hear a short tone. The display shows `Call Ended`.

Your radio may be programmed to perform a radio presence check prior to setting up the Private Call. If the target radio is not available, you hear a short tone and see negative mini notice on the display.

5.2.6.1.3

Making a Site All Call

This feature allows you to transmit to all users on the site that are currently not engaged in another call. Your radio must be programmed to allow you to use this feature.

Users on the channel/site cannot respond to an Site All Call.

1 Select the channel with the active Site All Call group alias. See Selecting a Call Type on page 239.

2 Hold the microphone 1 to 2 inches (2.5 to 5.0 cm) from your mouth.

3 Press the **PTT** button to make the call.

The LED lights up solid green. The Group Call icon appears in the top right corner. The first text line shows `Site All Call`.

4 Wait for the Talk Permit Tone to finish (if enabled), and speak clearly into the microphone.

5.2.6.1.4

Making a Multi-group Call

This feature allows you to transmit to all users on multiple groups. Your radio must be programmed to allow you to use this feature.

NOTICE:
Users on the groups cannot respond to a Multi-group Call.

1 Turn the Channel Selector Knob to select the Multi-group alias or ID.

2 Press the **PTT** button to make the call.

The LED lights up solid green. The display shows the Multi-group alias or ID.

Wait for the Talk Permit Tone to finish (if enabled) and speak clearly into the microphone.

5.2.6.2

Making a Private Call with a One Touch Call Button

NOTICE:
Programmable buttons press must be initiated from the Home screen.

The One Touch Call feature allows you to easily make a Private Call to a pre-defined Private Call alias or ID. This feature can be assigned to a short or long programmable button press.

You can ONLY have one alias or ID assigned to a One Touch Call button. Your radio can have multiple One Touch Call buttons programmed.

1 Press the programmed **One Touch Call** button to make a Private Call to the pre-defined Private Call alias or ID.

2 Hold the microphone 1 to 2 inches (2.5 to 5.0 cm) from your mouth.

3 Press the **PTT** button to make the call.

The LED lights up solid green.

The display shows the Private Call alias or ID.

4 Wait for the Talk Permit Tone to finish (if enabled) and speak clearly into the microphone.

5 Release the **PTT** button to listen.

When the target radio responds, the LED blinks green.

If there is no voice activity for a predetermined period of time, the call ends.

5.2.6.3

Making a Call with the Programmable Manual Dial Button

This feature allows the radio users to make private calls using the programmable manual dial button.

5.2.6.3.1

Making a Private Call

1 Press the programmed **Manual Dial** button to enter into the Manual Dial screen.

The display shows `Number:`.

2 Use the keypad to enter a subscriber alias or Private ID.

3 Hold the microphone 1 to 2 inches (2.5 to 5.0 cm) from your mouth.

4 Press the **PTT** button to make the call.

The LED lights up solid green. The Private Call icon appears in the top right corner. The first text line shows the subscriber alias. The second text line displays the call status.

5 Wait for the Talk Permit Tone to finish (if enabled) and speak clearly into the microphone.

6 Release the **PTT** button to listen.

When the target radio responds, the LED blinks green.

If there is no voice activity for a predetermined period of time, the call ends. You hear a short tone. The display shows `Call Ended`.

5.2.6.4

Making an Outbound Private Phone Call with the Programmable Manual Dial Button

1 Press the programmed **Manual Dial** button to enter into the Manual Dial screen.

The display shows `Number:`.

2 Use the keypad to enter a telephone number, and press OK to place a call to the entered number.

Press ◀ to delete any unwanted characters. Press * followed by # within 2 seconds to insert a pause. The `P` replaces * and # on the display.

If successful, the first line of the display shows `Phone Call`. The second line of the display shows the dialed telephone number.

If an invalid telephone number is selected, the display shows a negative mini notice, `Phone Call Failed`, `Resource Not Available`, or `Invalid Permissions`.

If OK is pressed with no telephone number entered, the radio sounds a positive indicator tone then a negative indicator tone. The display remains the same.

3 Long press ⌂ to end the call.

The first line of the display shows `Ending`. The second line of the display shows `Phone Call....`

The display shows `Phone Call Ended`.

5.2.6.5

Making an Outbound Private Phone Call via the Phone Menu

1 Press OK to access the menu.

2 Press ▲ or ▼ to Phone and press OK to select.

3 Press OK to select Manual Dial.

The first line of the display shows Number, the second line of the display shows a blinking cursor.

4 Use the keypad to enter a telephone number, and press OK to place a call to the entered number.

Press ◀ to delete any unwanted characters. Press * followed by # within 2 seconds to insert a pause. The P replaces * and # on the display.

If successful, the first line of the display shows Phone Call. The second line of the display shows the dialed telephone number.

If an invalid telephone number is selected, the display shows a negative mini notice, Phone Call Failed, Resource Not Available, or Invalid Permissions.

If OK is pressed with no telephone number entered, the radio sounds a positive indicator tone then a negative indicator tone. The display remains the same.

5 Long press ⏻ to end the call.

The first line of the display shows Ending. The second line of the display shows Phone Call....

The display shows Phone Call Ended.

5.2.6.6

Making an Outbound Private Phone Call from Contacts

NOTICE:
If the Phone Manual Dial is disabled in MOTOTRBO Connect Plus Option Board CPS, the Phone Number item will **not** be displayed in the Menu.

1 Press OK to access the menu.

2 Press ▲ or ▼ to `Contacts` and press OK to select.

3 Press ▲ or ▼ to `Manual Dial` and press OK to select.

4 Press ▲ or ▼ to `Phone Number` and press OK to select.

The first line of the display shows `Number`, the second line of the display shows a blinking cursor.

5 Use the keypad to enter a telephone number, and press OK to place a call to the entered number.

If the **PTT** button is pressed, the display shows a negative mini notice, `Press OK to Send` and returns to the previous screen.

Press ◀ to delete any unwanted characters. Press * followed by # within 2 seconds to insert a pause. The `P` replaces * and # on the display.

If successful, the first line of the display shows `Phone Call`. The second line of the display shows the dialed telephone number.

If OK is pressed with no telephone number entered, the radio sounds a positive indicator tone then a negative indicator tone. The display remains the same.

6 Long press ⏻ to end the call.

The first line of the display shows `Ending`. The second line of the display shows `Phone Call....`

The display shows `Phone Call Ended`.

5.2.6.7

Waiting for the Channel Grant in an Outbound Private Phone Call

When you make a Private Phone Call, the first line of the display shows `Phone Call`. The second line of the display shows the dialed telephone number.

When the call is connected, the Phone Call as Private Call icon appears in the top right corner. The first line of the display shows the telephone number.

If unsuccessful, the display shows a negative mini notice, `Phone Call Failed`, `Resource Not Available`, or `Invalid Permissions`.

Long press to end the call.

The display returns to the previous screen.

5.2.6.8

Making a Buffered Over-Dial in a Connected Outbound Private Phone Call

During the call, the Phone Call as Private Call icon appears in the top right corner. The first text line of the display shows the telephone number.

1 Use the keypad to enter the digits.

Press to delete any unwanted characters. Press followed by within 2 seconds to insert a pause. The `P` replaces `*` and `#` on the display.

The first text line of the display shows `Extra Digits`, the second text line of the display shows the entered extra digits.

2 Press the button.

If the **PTT** button is pressed, the display shows a negative mini notice, `Press OK to Send` and returns to the previous screen.

The Phone Call as Private Call icon appears in the top right corner. The first text line of the display

shows the telephone number with the over-dial digits appended.

3 Do one of the following.

- Press to return to the Phone Call screen.
- Long press to end the call.

5.2.6.9

Making a Live Over-Dial in a Connected Outbound Private Phone Call

During the call, the Phone Call as Private Call icon appears in the top right corner. The first text line of the display shows the telephone number.

1 Press the **PTT** button and use the keypad to enter the digits.

The Phone Call as Private Call icon appears in the top right corner. The first text line of the display shows the telephone number with the over-dial digits appended.

2 Long press to end the call.

The first line of the display shows `Ending`. The second line of the display shows `Phone Call....`

The display shows `Phone Call Ended`.

5.3

Advanced Features in Connect Plus Mode

This chapter explains the operations of the features available in your radio.

5.3.1

Home Channel Reminder

This feature provides a reminder when the radio is not set to the home channel for a period of time.

If this feature is enabled by using the CPS, the Home Channel Reminder tone and announcement sound, the first line of the display shows `Non` and the second line shows `Home Channel` periodically when the radio is not set to the home channel for a period of time.

You can respond to the reminder by performing one of the following actions:

- Return to the home channel.
- Mute the reminder temporarily by using the programmable button.
- Set a new home channel by using the programmable button.

5.3.2

Auto Fallback

Auto Fallback is a system feature that allows you to continue to make and receive non-emergency calls on the selected Group Contact, if certain types of failures occur in the Connect Plus system.

If one of these failures occurs, your radio attempts to roam to a different Connect Plus site. This search process may result in your radio finding an operable Connect Plus site, or it may result in your radio finding a Fallback Channel (if your radio is enabled for Auto Fallback).

A Fallback Channel is a repeater that is normally part of an operable Connect Plus site, but cannot communicate with either the site controller or Connect Plus network at that moment. In Fallback mode, the repeater operates as a single digital repeater. Auto Fallback Mode supports non-emergency Group Calls only. No other call types are supported in Fallback Mode.

5.3.2.1

Indications of Auto Fallback Mode

When your radio is using a Fallback channel, you hear the intermittent Fallback Tone approximately once every 15 seconds (except while transmitting). The display periodically shows a brief message, `Fallback Channel`. Your radio only permits PTT on the selected Group Contact (Group Call, Multigroup Call, or Site All Call). It does not allow you to make other types of calls.

5.3.2.2

Making/Receiving Calls in Fallback Mode

NOTICE:
Calls are heard only by radios that are monitoring the same Fallback channel and selected to the same Group. Calls are not networked to other sites or other repeaters.
Emergency voice calls or Emergency Alerts are not available in Fallback mode. If you press the emergency button in Fallback mode, the radio provides an invalid key press tone. Display-equipped radios also show the message, “Feature not available”.

Private (radio to radio) and Phone calls are not available in Fallback mode. If you attempt a call to a private contact, you will receive a denial tone. At this point you should select a desired group contact. Other non-supported calls include Remote Monitor, Call Alert, Radio Check, Radio Enable, Radio Disable, Text messaging, Location Updates, and packet data calls.

Enhanced Traffic Channel Access (ETCA) is not supported in Auto Fallback mode. If two or more radio users press **PTT** at the same time (or at

almost the same time), it is possible that both radios transmit until **PTT** is released. In this event, it is possible that none of the transmissions will be understood by receiving radios.

Making calls in Fallback mode is similar to normal functioning. Simply select the group contact you wish to use (using the radio's normal channel selection method), and then press the **PTT** to start your call. It is possible that the channel may be in use already by another group. If the channel is in use, you receive a busy tone and the display will say "Channel Busy". You may select Group, Multi-group or Site All Call contacts using your radio's normal channel selection method. While the radio is operating on the Fallback Channel, the Multigroup operates just like other Groups. It is only heard by radios that are currently selected to the same Multi-group.

5.3.2.3
Returning to Normal Operation

If the site returns to normal trunking operation while you are in range of your Fallback repeater, your radio automatically exits Auto Fallback mode. You hear a registration "beep" when the radio successfully registers. If you are in the range of an operable site (that is not in Fallback mode), you may press the Roam Request button (if programmed for your radio) to force your radio to search for and register on an available site. If no other site is available, your radio returns to Auto Fallback mode after searching is complete. If you drive out of coverage of your Fallback repeater, your radio enters Search mode (display indicates `Searching`).

5.3.3
Radio Check

If enabled, this feature allows you to determine if another radio is active in a system without disturbing the user of that radio. No audible or visual notification is shown on the target radio.

This feature is only applicable for subscriber IDs.

5.3.3.1
Sending a Radio Check

1 Access the Radio Check feature.

Radio Control	Steps
Programmed Ra-	**a** Press the programmed **Radio Check** button.

Radio Control	Steps
dio Check button	**b** Press ▲ or ▼ to the required subscriber alias or ID and press OK to select.
Menu	**a** Press OK to access the menu. **b** Press ▲ or ▼ to `Contacts` and press OK to select. **c** Press ▲ or ▼ to the required subscriber alias or ID and press OK to select. **d** Press ▲ or ▼ to `Radio Check` and press OK to select.

The display shows the Target Alias, indicating the request is in progress. The LED lights up solid green.

2 Wait for acknowledgment.

If the target radio is active in the system, a tone sounds and the display briefly shows `Target Radio Available.`

If the target radio is not active in the system, a tone sounds and the display briefly shows `Target Radio Not Available.`

Radio returns to the subscriber alias or ID screen when initiated via Menu.

Radio returns to the Home Screen if initiated via the programmable button.

5.3.4
Remote Monitor

Use the Remote Monitor feature to turn on the microphone of a target radio (subscriber alias or IDs only). The green LED will blink once on the target subscriber. You can use this feature to monitor, remotely, any audible activity surrounding the target radio.

Your radio must be programmed to allow you to use this feature.

5.3.4.1

Initiating Remote Monitor

NOTICE:
Remote Monitor automatically stops after a programmed duration or when there is any attempt to initiate transmission, change channels or power down the radio.

1 Access the Remote Monitor feature.

Radio Control	Steps
Programmed Remote Monitor Button	**a** Press the programmed **Remote Monitor** button. **b** Press ▲ or ▼ to the required subscriber alias or ID and press OK to select.
Menu	**a** Press OK to access the menu. **b** Press ▲ or ▼ to `Contacts` and press OK to select. **c** Press ▲ or ▼ to the required subscriber alias or ID and press OK to select. **d** Press ▲ or ▼ to `Manual Dial` and press OK to select. **e** Press ▲ or ▼ to `Remote Mon.` and press OK to select.

The first text line shows `Rem. Monitor`. The second text line displays the Target Alias, indicating the request is in progress. The LED lights up blinking green.

2 Wait for acknowledgment.

If successful, a positive indicator tone sounds and the display momentarily shows `Rem. Monitor Successful`. Your radio starts playing audio from the monitored radio for a programmed duration and display shows `Rem. Monitor`, followed by target alias. Once the timer expires, the radio sounds an alert tone and the LED turns off.

If unsuccessful, the radio sounds a negative indicator tone the display shows `Rem. Monitor Failed`.

5.3.5

Scan

This feature allows your radio to monitor and join calls for groups defined in a pre-programmed scan list. When scan is enabled, the scan icon appears on the status bar and the LED blinks yellow when idle.

5.3.5.1

Starting and Stopping Scan

NOTICE:
This procedure turns the Scan feature On or Off for all Connect Plus zones with the same Network ID as your currently selected zone. It is important to note that even when the Scan feature is turned on via this procedure, scan may still be disabled for some (or all) groups on your scan list. See Editing the Scan List on page 262 for more information.

You can start and stop scanning by pressing the programmed **Scan** button **OR** follow the procedure described next.

1 Press OK to access the menu.

2 Press ▲ or ▼ to `Scan` and press OK to select.

3 Press ▲ or ▼ to `Turn On` or `Turn Off` and press OK to select.

- The display shows `Scan On` if scan is enabled.

- The Scan menu shows `Turn Off` if scan is enabled.
- The display shows `Scan Off` if scan is disabled.
- The Scan menu shows `Turn On` if scan is disabled.

5.3.5.2

Responding to a Transmission During a Scan

During scanning, your radio stops on a group where activity is detected. The radio continuously listens for any member in the scan list when idle on the control channel.

1 Hold the microphone 1 to 2 inches (2.5 to 5.0 cm) from your mouth.

2 Press the **PTT** button during hang time.

The LED lights up solid green.

3 Wait for the Talk Permit Tone to finish (if enabled), and speak clearly into the microphone.

4 Release the **PTT** button to listen.

If you do not respond within the hang time, the radio returns to scanning other groups.

5.3.6

User Configurable Scan

If the Edit List menu is enabled, a user is able to Add and Remove the scan members from the Add Member menu. A Scan List member must be a regular Group Contact (for example, not Multi-group or Site All Call/Network Wide All Call) that is currently assigned to a Channel Selector position in a Connect Plus Zone with the same Network ID as the currently selected Zone. The Talkgroup alias must not match any Talkgroup that has been included in the current Zone Scan List.

Scan can be turned on or off from the menu or by pressing a programmed **Scan On/Off** button.

This feature functions only when the radio is not currently involved in a call. If you are presently listening to a call, your radio cannot scan for other group calls, and is therefore unaware they are in progress. Once your call is finished, your radio returns to the control channel time slot and is able to scan for groups that are in the scan list.

5.3.7

Turning Scan On or Off

NOTICE:
This procedure turns the Scan feature On or Off for all zones with the same Network ID as your currently selected zone. It is important to note that even when the Scan feature is turned on via this procedure, scan may still be disabled for some (or all) groups on your scan list. See the next section for more information.

If Scan is turned on, the Scan icon appears on your display. When Scan is on and you are not participating in a call, the LED blinks green and yellow.

The procedure for turning Scan on or off depends on how your radio is programmed. If programmed with a Scan On/Off button, use the button to toggle the feature on or off. If your radio has been programmed so that Scan can be turned on or off via the menu, follow the procedure described next.

1 Press OK to access the menu.

2 Press ▲ or ▼ to Scan and press OK to select.

3 Press ▲ or ▼ to Turn On or Turn Off and press OK to select.

- The display shows Scan On momentarily if scan is disabled.
- The display shows Scan Off momentarily if scan is enabled.

5.3.8

Editing the Scan List

NOTICE:
If the scan list entry happens to be the currently selected group, the radio listens for activity on this group regardless of whether the list entry currently shows a check mark or not. Whenever a radio is not in a call, the radio listens for activity on its Selected Group, Multi-group, the Site All Call, and its Default Emergency Revert Group (if configured for one). This operation cannot be disabled. If Scan is enabled the radio will also listen for activity on enabled Zone Scan List members.

Your scan list determines which groups can be scanned. The list is created when your radio is programmed. If your radio has been programmed to allow you to edit the scan list, you can:

- Enable/disable scan for individual groups on the list.
- Add and Remove the scan members from the Add Member menu. Refer to Add or Delete a Group via the Add Members Menu on page 263.

NOTICE:
A Scan List member must be a regular Group Contact (not Multi-group or Site All Call/Network Wide All Call) that is currently assigned to a Channel Selector position in a Connect Plus Zone with the same Network ID as the currently selected Zone.
The Talkgroup alias must not match any Talkgroup that has been included in the current Zone Scan List.

1. Press OK to access the menu.
2. Press ▲ or ▼ to `View/Edit List` and press OK to select.
3. Press ▲ or ▼ to the desired Group name.

   If a check mark precedes the Group name, then scan is currently enabled for this Group.

   If there is no check mark preceding the Group name, then scan is currently disabled for this Group.
4. OK to select the desired Group.

The display shows `Enable` if scan is currently disabled for the Group.

The display shows `Disable` if scan is currently enabled for the Group.

5 Select the displayed option (`Enable` or `Disable`) and press OK to select.

Depending on which option was selected, the radio momentarily displays `Scan Enabled` or `Scan Disabled` as confirmation.

The radio displays the Zone scan list again. If scan was enabled for the Group, the check mark displays before the Group name. If scan was disabled for the Group, the check mark is removed before the Group name.

5.3.9

Add or Delete a Group via the Add Members Menu

The Connect Plus radio does not allow a duplicate group number or a duplicate group alias to be placed on a zone scan list (or to be shown as a "scan candidate"). Thus, the list of "scan candidates" described in step 6 and step 7 sometimes changes after adding or deleting a group from the zone scan list.

If your radio has been programmed to allow you to edit the scan list, you can use the Add Members menu to add a group to the scan list of the currently selected zone, or to delete a group from the scan list of the currently selected zone.

1 Press OK to access the menu.

2 Press ▲ or ▼ to Scan option and press OK to select.

3 Press ▲ or ▼ to `<Add Members>` and press OK to select.

The display shows `Add Members from Zone n` (n = the Connect Plus zone number of the first Connect Plus zone in your radio with the same Network ID as your currently selected zone).

4 Do one of the following.

- If the group you want to add to the scan list is assigned to a channel selector position in that zone, go to step 6.
- If the group you want to add to the scan list is assigned to a channel selector position in a different Connect Plus zone, go to step 5.

5 Press ▲ or ▼ to scroll a list of Connect Plus zones that have the same Network ID as the currently selected zone.

6 After locating the Connect Plus zone where the desired group is assigned to a channel selector position, press OK to select.

Your radio displays the first entry in a list of groups assigned to a channel position in that zone. The groups on the list are called "scan candidates", because they can be added to the scan list of your currently selected zone (or they are already on the zone scan list).

If the zone does not have any groups that can be added to the scan list, the radio displays `No Candidates`.

7 Press ▲ or ▼ to scroll through the list of candidate groups.

If a plus sign (+) is displayed immediately before the group alias, this indicates the group is currently on the scan list for the selected zone.

If the plus sign (+) is not displayed immediately before the alias, the group is not currently on the scan list, but can be added.

8 Press OK when the desired group alias is displayed.

If this group is not currently on the scan list for the currently selected zone, the `Add` (Group Alias) message is displayed.

If this group is already on the scan list for the currently selected zone, the `Delete` (Group Alias) message is displayed.

9 Press OK to accept the displayed message (`Add` or `Delete`).

If deleting a group from the list, you will know the operation is successful because the plus sign (+) will no longer display immediately before the alias.

If adding a group to the list, you will know the operation is successful because the plus sign (+) will display before the alias.

If you are attempting to add a group, and the list is already full, the radio displays `List Full`. If this should occur, it will be necessary to delete a group from the scan list prior to adding a new one.

10 When finished, press ⮌ as many times as necessary to return to the desired menu.

5.3.10

Understanding Scan Operation

NOTICE:
If the Radio joins a call for a Zone Scan List member from a different Zone and Call Hang Timer expires before you are able to respond, in order to respond, you must navigate to the Zone and Channel of the Scan List Member and start a new call.

There are some circumstances in which you can miss calls for groups that are in your scan list. When you miss a call for one of the following reasons, this does not indicate a problem with your radio. This is a normal scan operation for Connect Plus.

- Scan feature is not turned on (check for the scan icon on the display).
- Scan list member has been disabled via the menu (see Editing the Scan List on page 262).
- You are participating in a call already.
- No member of the scanned group is registered at your site (Multisite systems only).

5.3.11

Scan Talkback

If your radio scans into a call from the selectable group scan list, and if the **PTT** button is pressed during the scanned call, the operation of the radio depends on whether Scan Talkback was enabled or disabled during radio programming.

Scan Talkback Disabled

The radio leaves the scanned call and attempts to transmit on the contact for the currently selected

channel position. After the Call Hang Time on the currently selected contact expires, the radio returns to the home channel and starts the Scan Hang Time Timer. The radio resumes group scan after its Scan Hang Time Timer expires.

Scan Talkback Enabled

If the **PTT** button is pressed during the Group Hang Time of the scanned call, the radio attempts to transmit to the scanned group.

NOTICE:
If you scan into a call for a group that is not assigned to a channel position in the currently selected zone and you miss the Hang Time of the call, switch to the proper zone and then select the channel position of the group to talk back to that group.

5.3.12

Editing Priority for a Talkgroup

The Priority Monitor feature allows the radio to automatically receive transmission from the talkgroup with higher priority when it is in another call. A tone sounds when the radio switches to the call with higher priority.

There are two levels of priority for the talkgroups: P1 and P2. P1 has higher priority than P2.

NOTICE:
If Default Emergency Revert Group ID is configured in MOTOTRBO Connect Plus Option Board CPS, there are three levels of priority for talkgroups: P0, P1, and P2. P0 is the permanent Emergency Revert Group ID and the highest priority. Check with your dealer or system administrator for more information.

1. Press OK to access the menu.
2. Press ▲ or ▼ to Scan and press OK to select.
3. Press ▲ or ▼ to View/Edit List and press OK to select.
4. Press ▲ or ▼ to the required talkgroup and press OK to select.

5 Press ▲ or ▼ to `Edit Priority` and press OK to select.

6 Press ▲ or ▼ to the required priority level and press OK to select.

The display shows positive mini notice before returning to the previous screen. The priority icon appears on the left of the talkgroup.

5.3.13

Contacts Settings

NOTICE:
You can add, or edit subscriber IDs for Connect Plus Contacts. Deleting subscriber IDs can only be performed by your dealer.
If the Privacy feature is enabled on a channel, you can make a privacy-enabled voice call on that channel. Only target radios with the same Privacy Key, or the same Key Value and Key ID as your radio are able to unscramble the transmission.

Access to Contact Lists depends on the zone configuration:

- If only one zone is configured in the radio, the Contact List directly displays the list from the current selected zone.
- If multiple zones are configured in the radio, the Zone Contact Folder displays all zones with identical network IDs as the current selected zone. The user can access the contacts in these zones.

Contacts provide “address-book” capabilities on your radio. Each entry corresponds to an alias or ID that you use to initiate a call.

Each zone provides a Contact List with up to 100 contacts. The following contact types are available:

- Private Call
- Group Call
- Multigroup Call
- Site All Call Voice
- Site All Call Text
- Dispatch Call

The Dispatch Call contact type is used to send a text message to a dispatcher PC through a third-party Text Message Server.

5.3.13.1

Making a Private Call from Contacts

1 Press OK to access the menu.

2 Press ▲ or ▼ to Contacts and press OK to select.

The entries are alphabetically sorted.

3 Hold the microphone 1 to 2 inches (2.5 to 5.0 cm) from your mouth.

4 Press the **PTT** button to make the call.

The LED lights up solid green.

5 Wait for the Talk Permit Tone to finish (if enabled), and speak clearly into the microphone.

6 Release the **PTT** button to listen.

When the target radio responds, the LED blinks green and the display shows the transmitting user's ID.

If there is no voice activity for a predetermined period of time, the call ends.

You hear a short tone. The display shows Call Ended.

5.3.13.2

Making a Call Alias Search

You can also use alias or alphanumeric search to retrieve the required subscriber alias.

This feature is only applicable while in Contacts.

1 Press OK to access the menu.

2 Press ▲ or ▼ to Contacts and press OK to select.

The entries are alphabetically sorted.

3 Key in the first character of the required alias, and then press the ▲ or ▼ button to locate the required alias.

4 Hold the microphone 1 to 2 inches (2.5 to 5.0 cm) from your mouth.

5 Press the **PTT** button to make the call.

The LED lights up solid green. The display shows the destination alias.

6 Wait for the Talk Permit Tone to finish (if enabled), and speak clearly into the microphone.

7 Release the **PTT** button to listen.

When the target radio responds, the LED blinks green.

If there is no voice activity for a predetermined period of time, the call ends.

The display shows `Call Ended`.

5.3.13.3

Adding a New Contact

1 Press OK to access the menu.

2 Press ▲ or ▼ to `Contacts` and press OK to select.

3 Press ▲ or ▼ to `New Contact` and press OK to select.

4 Use the keypad to enter the contact number and press OK to confirm.

5 Use the keypad to enter the contact name and press OK to confirm.

6 If adding a Radio Contact, press ▲ or ▼ to the required ringer type and press OK to select.

The radio sounds a positive indicator tone and the display shows `Contact Saved`.

5.3.14

Call Indicator Settings

This feature allows the radio users to configure call or text message ringing tones.

5.3.14.1

Activating and Deactivating Call Ringers for Call Alert

You can select, or turn on or off ringing tones for a received Call Alert.

1 Press OK to access the menu.

2 Press ▲ or ▼ to `Utilities` and press OK to select.

3 Press ▲ or ▼ to `Radio Settings` and press OK to select.

4 Press ▲ or ▼ to `Tones/Alert` and press OK to select.

5 Press ▲ or ▼ to `Call Ringers` and press OK to select.

6 Press ▲ or ▼ to `Call Alert` and press OK to select.

The current tone is indicated by a ✓ .

7 Press ▲ or ▼ to the required tone and press OK to select.

✓ appears beside selected tone.

5.3.14.2

Activating and Deactivating Call Ringers for Private Calls

You can turn on or off the ringing tones for a received Private Call.

1 Press OK to access the menu.

2 Press ▲ or ▼ to `Utilities` and press OK to select.

3 Press ▲ or ▼ to `Radio Settings` and press OK to select.

4 Press ▲ or ▼ to `Tones/Alerts` and press OK to select.

5 Press ▲ or ▼ to `Call Ringers` and press OK to select.

6 Press ▲ or ▼ to `Private Call` and press OK to select.

7 Press OK to enable/disable the Private Call ringing tones.

The display shows ✓ beside `Enabled`, if Private Call ringing tones are enabled.

The ✓ is not displayed when Private Call ringing tones are disabled.

5.3.14.3

Activating and Deactivating Call Ringers for Text Message

You can turn on or off the ringing tones for a received Text Message.

1 Press OK to access the menu.

2 Press ▲ or ▼ to `Utilities` and press OK to select.

3 Press ▲ or ▼ to `Radio Settings` and press OK to select.

4 Press ▲ or ▼ to `Tones/Alerts` and press OK to select.

5 Press ▲ or ▼ to `Call Ringers` and press OK to select.

6 Press ▲ or ▼ to `Text Message` and press OK to select.

The current tone is indicated by a ✓ .

7 Press ▲ or ▼ to the required tone and press OK to select.

✓ appears beside selected tone.

5.3.14.4

Selecting a Ring Alert Type

NOTICE:
The programmed **Ring Alert Type** button is assigned by your dealer or system administrator. Check with your dealer or system administrator to determine how your radio has been programmed.

You can program the radio calls to one predetermined vibrate call. If All Tones status is disabled, the radio displays the All Tone Mute icon. If All Tones status is enabled, the related ring alert type is displayed.

The radio vibrates once if it is a momentary ring style. The radio vibrates repetitively if it is a repetitive ring style. When set to Ring and Vibrate, the radio sounds a specific ring tone if there is any incoming radio transaction (for example, Call Alert or Message). It sounds like a positive indicator tone or missed call.

5.3.14.5

Escalating Alarm Tone Volume

You can program your radio to continually alert you when a radio call remains unanswered. This is done by automatically increasing the alarm tone volume over time. This feature is known as Escalert.

5.3.15

Call Log

Your radio keeps track of all recent outgoing, answered, and missed Private Calls. Use the call log feature to view and manage recent calls.

You can perform the following tasks in each of your call lists:

- Delete
- View Details

5.3.15.1

Viewing Recent Calls

The lists are `Missed`, `Answered`, and `Outgoing`.

1. Press OK to access the menu.
2. Press ▲ or ▼ to `Call Log` and press OK to select.
3. Press ▲ or ▼ to preferred list and press OK to select.

   The display shows the most recent entry at the top of the list.
4. Press ▲ or ▼ to view the list.

   Press the **PTT** button to start a Private Call with the current selected alias or ID.

5.3.15.2

Deleting a Call from a Call List

1 Press OK to access the menu.

2 Press ▲ or ▼ to Call Log and press OK to select.

3 Press ▲ or ▼ to the required list and press OK to select.

When you select a call list and it contains no entries, the display shows List Empty, and sounds a low tone if Keypad Tones are turned on .

4 Press ▲ or ▼ to the required alias or ID and press OK to select.

5 Press ▲ or ▼ to Delete and press OK to select.

6 Do one of the following:

- Press OK to select Yes to delete the entry. The display shows Entry Deleted.
- Press ▲ or ▼ to No, and press the OK button to return to the previous screen.

5.3.15.3

Viewing Details from a Call List

1 Press OK to access the menu.

2 Press ▲ or ▼ to Call Log and press OK to select.

3 Press ▲ or ▼ to the required list and press OK to select.

4 Press ▲ or ▼ to the required alias or ID and press OK to select.

5 Press ▲ or ▼ to `View Details` and press OK to select.

Display shows details of call list.

5.3.16

Call Alert Operation

Call Alert paging enables you to alert a specific radio user to call you back when they are able to do so.

This feature is accessible through the menu by using Contacts, manual dial or a programmed **One Touch Access** button.

5.3.16.1

Responding to Call Alerts

When you receive a Call Alert:

- A repetitive tone sounds.
- The yellow LED blinks.
- The display shows the notification list listing a Call Alert with the alias or ID of the calling radio.

Depending on the configuration by your dealer or system administrator, you can respond to a Call Alert by doing one of the following:

- Press the **PTT** button and respond with a Private Call directly to the caller.
- Press the **PTT** button to continue normal talkgroup communication.
  The Call Alert is moved to the Missed Call option at the Call Log menu. You can respond to the caller from the Missed Called log.

See Notification List on page 191 and Call Log Features on page 130 for more information.

5.3.16.2

Making a Call Alert from the Contact List

1 Press OK to access the menu.

2 Press ▲ or ▼ to `Contacts` and press OK to select.

3 Use one of the steps described next to select the required subscriber alias or ID:

- select the subscriber alias directly
  - Press ▲ or ▼ to the required subscriber alias and press OK to select.
- use the `Manual Dial` menu
  - Press ▲ or ▼ to `Manual Dial` and press OK to select.
  - The Manual Dial text entry screen shall be displayed. Enter the Subscriber ID and press OK .

4 Press ▲ or ▼ to `Call Alert` and press OK to select.

The display shows `Call Alert: <Subscriber Alias or ID>Call Alert` and the subscriber alias or ID, indicating that the Call Alert has been sent.

The LED lights up solid green when your radio is sending the Call Alert.

If the Call Alert acknowledgement is received, the display shows `Call Alert Successful.`

If the Call Alert acknowledgement is not received, the display shows `Call Alert Failed.`

5.3.16.3

Making a Call Alert with the One Touch Access Button

Press the programmed **One Touch Access** button to make a Call Alert to the predefined alias.

The display shows `Call Alert` and the subscriber alias or ID, indicating that the Call Alert has been sent.

The LED lights up solid green when your radio is sending the Call Alert.

If the Call Alert acknowledgement is received, the display shows `Call Alert Successful.`

If the Call Alert acknowledgement is not received, the display shows `Call Alert Failed.`

5.3.17

Mute Mode

Mute Mode provides an option to silence all audio indicators on your radio.

When Mute Mode is initiated, all audio indicators are muted except higher priority features such as emergency operations.

When Mute Mode is exited, your radio resumes playing ongoing tones and audio transmissions.

IMPORTANT:
You can only enable either Face Down or Man Down one at a time. Both features cannot be enabled together.

5.3.17.1

Turning On Mute Mode

Follow the procedure to turn on Mute Mode.

Access this feature by using the programmed **Mute Mode** button.

The following occurs when Mute mode is enabled:

- Positive Indicator Tone sounds.
- Display shows `Mute Mode On.`
- The red LED light starts blinking and remains blinking until Mute Mode is exited.
- Display shows **Mute Mode** icon on home screen.
- Radio is muted.
- Mute Mode Timer begins counting down the duration that is configured.

5.3.17.2

Setting Mute Mode Timer

Mute Mode feature can be enabled for a pre-configured amount of time by setting the Mute Mode Timer. The timer duration is configured in the radio menu and can range

between 0.5–6 hours. Mute Mode is exited once the timer expires.

If the timer is left at 0, the radio remains in Mute mode for an indefinite period until the programmed **Mute Mode** button is pressed.

1. Press OK to access the menu.
2. Press ▲ or ▼ to `Utilities`. Press OK to select.
3. Press ▲ or ▼ to `Radio Settings`. Press OK to select.
4. Press ▲ or ▼ to `Mute Timer`. Press OK to select.
5. Press ▲ or ▼ to edit the numeric value of each digit, and press OK .

5.3.17.3

Exiting Mute Mode

This feature can be exited automatically once the Mute Mode Timer expires.

Do one of the following to exit Mute mode manually:

- Press the programmed **Mute Mode** button.
- Press the **PTT** button on any entry.

The following occurs when Mute mode is disabled:

- Negative Indicator Tone sounds.
- Display shows `Mute Mode Off`.
- The blinking red LED turns off.
- **Mute Mode** icon disappears from home screen.
- Your radio unmutes and speaker state is restored.
- If the timer has not expired, Mute mode timer is stopped.

NOTICE:
Mute Mode is also exited if the user transmits voice or switches to an unprogrammed channel.

5.3.18

Emergency Operation

NOTICE:
If your radio is programmed for Silent or Silent with Voice emergency initiation, in most cases it automatically exits silent operation after the Emergency Call or Emergency Alert is finished. The exception to this rule is when Emergency Alert is the configured Emergency Mode and Silent is the configured Emergency Type. If your radio is programmed in this manner, the silent operation continues until you cancel silent operation by pressing **PTT** or the button configured for Emergency Off.

Emergency voice calls and Emergency Alerts are not supported when operating in Connect Plus Auto Fallback mode. For more information see the Auto Fallback on page 254.

An Emergency Alert is used to indicate a critical situation. You can initiate an Emergency at any time on any screen display, even when there is activity on the current channel. Pressing the **Emergency** button initiates the programmed Emergency mode. The programmed Emergency mode may also be initiated by triggering the optional Man Down feature. The Emergency feature may be disabled in your radio.

Your dealer can set the duration of a button press for the programmed **Emergency** button, except for long press, which is similar with all other buttons:

Short press
Between 0.05 seconds and 0.75 seconds.

Long press
Between 1.00 second and 3.75 seconds.

The **Emergency** button is assigned with the Emergency On/Off feature. Check with your dealer for the assigned operation of the **Emergency** button.

- If the short press for the **Emergency** button is assigned to turn on the Emergency mode, then the long press for the **Emergency** button is assigned to exit the Emergency mode.
- If the long press for the **Emergency** button is assigned to turn on the Emergency mode, then the short press for the **Emergency** button is assigned to exit the Emergency mode.

When your radio is selected to a Connect Plus zone, it supports three Emergency modes:

Emergency Call

You must press the **PTT** button to talk on the assigned emergency time slot.

Emergency Call with Voice to Follow

For the first transmission on the assigned emergency time slot, the microphone is automatically unmuted and you may talk without pressing the **PTT** button. The microphone stays “hot” in this fashion for a time period programmed into the radio. For subsequent transmissions in the same Emergency call, you must press the **PTT** button.

Emergency Alert

An Emergency Alert is not a voice call. It is an emergency notification that is sent to radios that are configured to receive these alerts. The radio sends an emergency alert by using the control channel of the currently registered site. The Emergency Alert is received by radios in the Connect Plus network that are programmed to receive them (no matter which network site they are registered to).

Only one of the Emergency Modes can be assigned to the Emergency button per zone. In addition, each Emergency mode has the following types:

Regular

Radio initiates an Emergency and shows audio and/or visual indicators.

Silent

Radio initiates an Emergency without any audio or visual indicators. The radio suppresses all audio or visual indications of the Emergency until you press the **PTT** button to start a voice transmission.

Silent with Voice

The same as Silent operation, except that the radio also unmutes for some voice transmissions.

5.3.18.1

Receiving an Incoming Emergency

Your radio may be programmed to sound an alert tone and also display information about the incoming Emergency. If so programmed, upon receiving the incoming Emergency, the display shows the Emergency Details screen with the emergency icon, the Alias or ID of the radio that requested the Emergency, the Group Contact being used for the Emergency, and one additional line of information. The additional information is the name of the zone that contains the Group Contact.

At the present time, the radio displays only the most recently decoded Emergency. If a new Emergency is received before the prior Emergency is cleared, the details for the new Emergency replace the details of the previous Emergency.

Depending on how your radio has been programmed, the Emergency Details screen (or Alarm List screen) will stay on your radio display even after the Emergency ends. You can save the emergency details to the Alarm List, or you can delete the emergency details as described in the following sections.

5.3.18.2

Saving the Emergency Details to the Alarm List

Saving the emergency details to the Alarm List allows you to view the details again at a later time by selecting Alarm List from the Main Menu.

1 While the Emergency Details (or Alarm List) screen is displayed, press .

The **Exit Alarm List** screen displays.

2 Perform one of the following actions:

- Select **Yes** and press OK to save the emergency details to the Alarm List, and to exit the Emergency Details (or Alarm List) screen.
- Select **No** and press OK to return to the Emergency Details (or Alarm List) screen.

5.3.18.3

Deleting the Emergency Details

1 While the Emergency Details screen is displayed, press .

The **Delete** screen displays.

2 Perform one of the following actions:

- Select **Yes** and press OK to delete the emergency details.
- Select **No** and press OK to return to the Emergency Details screen.

5.3.18.4

Responding to an Emergency Call

NOTICE:
If you do not respond to the Emergency Call within the time allotted for the Emergency Call Hang Time, the Emergency call will end. If you want to speak to the group after the Emergency Call Hang Time expires, you must first select the channel position assigned to the group (if not already selected). Then, press **PTT** to start a non-Emergency Call to the group.

1 When receiving an Emergency Call, press any button to stop all Emergency Call received indications.

2 Press the **PTT** button to initiate a voice transmission on the Emergency group.

All radios that are monitoring this group hear your transmission.

3 Wait for the Talk Permit Tone to finish (if enabled) and speak clearly into the microphone.

The LED lights up green.

4 Release the **PTT** button to listen.

When the emergency initiating radio responds, the LED blinks green. You see the Group Call icon, the group ID, and transmitting radio ID on your display.

5.3.18.5

Responding to an Emergency Alert

NOTICE:
The Group contact used for the Emergency Alert should not be used for voice communication. This could prevent other radios from sending and receiving Emergency Alerts on the same group.

An Emergency Alert from a radio indicates that the user is in an urgent situation. You may respond to the alert by initiating a private call to the radio who declared the emergency, initiating a group call to a designated talk group, sending the radio a Call Alert, initiating a Remote Monitor of that radio, etc. The proper response is determined by your organization and the individual situation.

5.3.18.6

Ignore Emergency Revert Call

This feature enhancement provides an option for your radio to disregard an active Emergency Revert Call.

To enable Ignore Emergency Revert Call, your radio must be configured through the Connect Plus Customer Programming Software (CPCPS).

When the feature is enabled, the radio does not display Emergency Call indications and does not receive any audio on the default Emergency Revert Group ID.

Contact with your dealer for more information.

5.3.18.7

Initiating an Emergency Call

NOTICE:
If your radio is set to Silent, it does not display any audio or visual indicators during Emergency mode until you press the **PTT** button to initiate a voice transmission.
If your radio is set to Silent with Voice, it does not initially display any audio or visual indicators that the radio is in Emergency mode. However, your radio unmutes for the transmissions of radios responding to your emergency. The emergency indicators only appear once you press the **PTT** button to initiate a voice transmission from your radio.

For both “Silent” and “Silent with Voice” operation, the radio automatically exits silent operation after the Emergency Call is finished.

1 Press the programmed **Emergency** button.

2 Press the **PTT** button to initiate a voice transmission on the Emergency group.

When you release the **PTT** button, the Emergency call continues for the time allotted for the Emergency Call Hang Time.

If you press the **PTT** button during this time, the Emergency call continues.

5.3.18.8

Initiating an Emergency Call with Voice to Follow

Your radio must be programmed for this type of operation.

When enabled for this operation, when you press the programmed **Emergency** button, and when your radio receives the time slot assignment, the microphone is automatically activated without pressing the **PTT** button. This activated microphone state is also known as "hot mic". The "hot mic" applies to the first voice transmission from your radio during the Emergency call. For subsequent transmissions in the same Emergency call, you must press the **PTT** button.

1 Press the programmed **Emergency** button.

2 The microphone remains active for the "hot mic" time specified in your radio codeplug programming.

During this time, the LED lights up green.

3 Press and hold the **PTT** button to talk longer than the programmed duration.

5.3.18.9

Initiating an Emergency Alert

NOTICE:
If your radio is programmed for "Silent" or "Silent with Voice", it will not provide any audio or visual indications that it is sending an Emergency Alert. If programmed for "Silent", the silent operation continues indefinitely until you press PTT or the button configured for "Emergency Off". If programmed for "Silent with Voice", the radio automatically cancels silent operation when the site controller broadcasts the Emergency Alert.

Press the orange **Emergency** button.

Upon transmitting the Emergency Alert to the site controller, the radio display shows the Emergency icon, the Group contact used for the Emergency Alert, and `TX Alarm`.

Once the Emergency Alert is successfully sent and is being broadcast for other radios to hear, a positive indicator tone

sounds and the radio displays `Alarm Sent`. If the Emergency Alert is unsuccessful, a negative indicator tone sounds and the radio displays `Alarm Failed`.

5.3.18.10

Exiting Emergency Mode

NOTICE:
If the Emergency call ends due to the expiration of the Emergency Hang Time, but the emergency condition is not over, press the **Emergency** button again to restart the process.

If you initiate an Emergency Alert by pressing the programmed **Emergency** button, your radio automatically exits Emergency mode after receiving a response from the Connect Plus system.

If you initiate an Emergency call by pressing the programmed **Emergency** button, your radio will be assigned a channel automatically when one becomes available. Once your radio has transmitted a message indicating the emergency, you cannot cancel your Emergency call. However, if you pressed the button by accident or the emergency no longer exists, you may wish to say this over the assigned channel. When you release the **PTT** button, the Emergency call is discontinued after the Emergency Call Hang Time expires.

If your radio was configured for Emergency with Voice to Follow, use the “hot mic” period to explain your error, then press and release the **PTT** button to discontinue the transmission. The Emergency call is discontinued after the Emergency Call Hang Time expires.

5.3.19

Text Messaging

Your radio is able to receive data, for example a text message, from another radio or a text message application.

There are two types of text messages, Digital Mobile Radio (DMR) Short Text Message and text message. The maximum length of a DMR Short Text Message is 23 characters. The maximum length of a text message is 280 characters, including the subject line. The subject line only appears when you receive messages from e-mail applications.

NOTICE:
The maximum character length is only applicable for models with the latest software and hardware. For radio models with older software and hardware, the maximum length of a text message is 140 characters. Contact your dealer for more information.

5.3.19.1

Sending a Quick Text Message

Your radio supports a maximum of 10 Quick Text messages as programmed by your dealer.

While Quick Text messages are predefined, you can edit each message before sending it.

If you are sending the message, perform the following to select a recipient:

- Press ▲ or ▼ to the required alias and press OK to select.
- Press ▲ or ▼ to `Manual Dial`, and press OK to select. The first line of the display shows `Number:`. The second line of the display shows a blinking cursor. Key in the subscriber alias or ID and press OK .

The display shows `Sending Message`, confirming your message is being sent.

If the message is sent successfully, a tone sounds and the display shows `Message Sent`.

If the message cannot be sent, a low tone sounds and the display shows `Message Send Failed`.

If the text message fails to send, the radio returns you to the `Resend` option screen (see Managing Fail-to-Send Text Messages on page 289).

5.3.19.2

Sending Quick Text Messages with the One Touch Access Button

To send a predefined Quick Text message to a predefined alias, press the programmed **One Touch Access** button.

The display shows `Sending Message`.

If message is successfully sent, your radio shows the following indications:

- A positive tone sounds.
- The display shows `Message Sent`.

If message fails to be sent, your radio shows the following indications:

- A negative tone sounds.

- The display shows `Message Send Failed`.

If the text message fails to send, the radio returns you to the `Resend` option screen.
See Managing Fail-to-Send Text Messages on page 289.

5.3.19.3

Accessing the Drafts Folder

The Drafts folder stores a maximum of ten (10) last saved messages. When the folder is full, the next saved text message automatically replaces the oldest text message in the folder.

NOTICE:
You can edit saved text message before sending it. Only available with a keypad microphone (see Editing and Sending a Saved Text Message on page 288. Long press ⏎ at any time to return to the Home screen.

5.3.19.3.1

Viewing a Saved Text Message

1 Access the **Text Message** feature.

Radio Controls	Steps
Programmed Text Message button	Press the programmed **Text Message** button.
Menu	**a** Press OK to access the menu. **b** Press ▲ or ▼ to `Messages` and press OK to select.

2 Press ▲ or ▼ to `Drafts` and press OK to select.

3 Press ▲ or ▼ to the required message and press OK to select.

5.3.19.3.2

Editing and Sending a Saved Text Message

1 Press OK again while viewing the message.

2 Press ▲ or ▼ to Edit and press OK to select.

A blinking cursor appears.

3 Use the keypad to type your message.

Press ◀ to move one space to the left. Press ▶ or the # key to move one space to the right. Press the * key to delete any unwanted characters.

Long press # to change text entry method.

4 Press OK once message is composed.

5 Select the message recipient by:

- Press ▲ or ▼ to the required alias and press OK to select.
- Press ▲ or ▼ to Manual Dial, and press OK to select. The first line of the display shows Number:. The second line of the display shows a blinking cursor. Key in the subscriber alias or ID and press OK .

The display shows Sending Message, confirming your message is being sent.

If the message is sent successfully, a tone sounds and the display shows Message Sent.

If the message cannot be sent, a low tone sounds and the display shows Message Send Failed.

If the text message cannot be sent, it is moved to the Sent Items folder and marked with a Send Failed icon.

5.3.19.3.3

Deleting a Saved Text Message from Drafts

1 Access the **Text Message** feature.

Radio Controls	Steps
Programmed Text Message button	Press the programmed **Text Message** button.
Menu	**a** Press OK to access the menu. **b** Press ▲ or ▼ to `Messages` and press OK to select.

2 Press ▲ or ▼ to `Drafts` and press OK to select.

3 Press ▲ or ▼ to the required message and press OK to select.

4 Press ▲ or ▼ to `Delete` and press OK to delete the text message.

5.3.19.4

Managing Fail-to-Send Text Messages

You can select one of the following options while at the `Resend` option screen:

- Resend
- Forward
- Edit

5.3.19.4.1

Resending a Text Message

Press OK to resend the same message to the same subscriber/group alias or ID.

If the message is sent successfully, a tone sounds and the display shows the positive mini notice.

If the message cannot be sent, the display shows the negative mini notice.

5.3.19.4.2

Forwarding a Text Message

Select `Forward` to send the message to another subscriber/group alias or ID.

1 Press ▲ or ▼ to `Forward` and press OK to select.

2 To select the message recipient, press ▲ or ▼ to the required alias or ID and press OK to select.

The display shows `Sending Message`, confirming your message is being sent.

If the message is sent successfully, a tone sounds and the display shows `Message Sent`.

If the message cannot be sent, a low tone sounds and the display shows `Message Send Failed`.

5.3.19.5

Managing Sent Text Messages

Once a message is sent to another radio, it is saved in Sent Items. The most recent sent text message is always added to the top of the Sent Items list.

The Sent Items folder is capable of storing a maximum of 30 last sent messages. When the folder is full, the next

sent text message automatically replaces the oldest text message in the folder.

NOTICE:

Long press at any time to return to the Home screen.

5.3.19.5.1

Viewing a Sent Text Message

1 Access the **Text Message** feature.

Radio Controls	Steps
Programmed Text Message button	Press the programmed **Text Message** button.
Menu	**a** Press OK to access the menu.
	b Press or to `Messages` and press OK to select.

2 Press or to `Sent Items` and press OK to select.

3 Press or to the required message and press OK to select.

The icon at the top right corner of the screen indicates the status of the message (see Sent Item Icons on page 234).

5.3.19.5.2

Sending a Sent Text Message

You can select one of the following options while viewing a sent text message:

- Resend

- Forward
- Edit
- Delete

1 Press OK again while viewing the message.

2 ▲ or ▼ to one of the following options and press OK to select.

Option	Steps
Forward	Select Forward to send the selected text message to another subscriber/group alias or ID (see Forwarding a Text Message on page 290).
Delete	Select Delete to delete the text message.
Resend	Select Resend to resend the selected text message to the same subscriber/group alias or ID.
	The display shows Sending Message, confirming that the same message is being sent to the same target radio. If the message is sent successfully, a tone sounds and the display shows Message Sent. If the message cannot be sent, a low tone sounds and the display shows Message Send Failed. If the message fails to send, the radio returns you to the Resend option screen. Press OK to resend the message to the same subscriber/group alias or ID.

If you exit the message sending screen while the message is being sent, the radio updates the status of the message in the Sent Items folder without any audio or visual indication.

If the radio changes mode or powers down before the status of the message in Sent Items is updated,

the radio cannot complete any In-Progress messages and automatically marks it with a **Send Failed** icon.

The radio supports a maximum of five In-Progress messages at one time. During this period, the radio cannot send any new message and automatically marks it with a **Send Failed** icon.

5.3.19.5.3

Deleting All Sent Text Messages from Sent Items

1 Access the **Text Message** feature.

Radio Controls	Steps
Programmed Text Message button	Press the programmed **Text Message** button.
Menu	**a** Press OK to access the menu.
	b Press ▲ or ▼ to `Messages` and press OK to select.

2 Press ▲ or ▼ to `Sent Items` and press OK to select.

When you select `Sent Items` and it contains no text messages, the display shows `List Empty`, and sounds a low tone if Keypad Tones are turned on.

3 Press ▲ or ▼ to `Delete All` and press OK to select.

4 Choose one of the following.

- Press ▲ or ▼ to `Yes` and press OK to select. The display shows positive mini notice.

- Press ▲ or ▼ to No and press OK to return to the previous screen.

5.3.19.6

Receiving a Text Message

When your radio receives a message, the display shows the Notification List with the alias or ID of the sender and the Message icon.

You can select one of the following options when receiving a text message:

- Read
- Read Later
- Delete

5.3.19.7

Reading a Text Message

1 Press ▲ or ▼ to Read? and press OK to select.

Selected message in the Inbox opens.

2 Do one of the following:

- Press OK to return to the Inbox.
- Press OK a second time to reply, forward, or delete the text message.

5.3.19.8

Managing Received Text Messages

Use the Inbox to manage your text messages. The Inbox is capable of storing a maximum of 30 messages.

Text messages in the Inbox are sorted according to the most recently received.

Your radio supports the following options for text messages:

- Reply (via Quick Text)
- Forward
- Delete

- Delete All

NOTICE:
If the channel type is not a match, you can only forward, delete, or delete all Received messages.

Long press at any time to return to the Home screen.

5.3.19.8.1

Viewing a Text Message from the Inbox

1 Press OK to access the menu.

2 Press or to Messages and press OK to select.

3 Press or to Inbox and press OK to select.

4 Press or to view the messages.

5 Do one of the following:

- Press OK to select the current message, and press OK again to reply, forward, or delete that message.
- Long press to return to the Home screen.

5.3.19.8.2

Replying to a Text Message from the Inbox

1 Access the **Text Message** feature.

Radio Controls	Steps
Programmed Text Message button	Press the programmed **Text Message** button.
Menu	**a** Press OK to access the menu.

Radio Controls	Steps
	b Press ▲ or ▼ to `Messages` and press OK to select.

2 Press ▲ or ▼ to `Inbox` and press OK to select.

3 Press ▲ or ▼ to the required message and press OK to select.

4 Press OK once more to access the sub-menu.

5 Use your keypad to write/edit your message.

6 Press OK once message is composed.

The display shows `Sending Message`, confirming your message is being sent.

If the message is sent successfully, a tone sounds and the display shows `Message Sent`.

If the message cannot be sent, a low tone sounds and the display shows `Message Send Failed`.

If the message cannot be sent, the radio returns you to the `Resend` option screen (see Managing Fail-to-Send Text Messages on page 289).

5.3.19.8.3

Deleting a Text Message from the Inbox

1 Access the **Text Message** feature.

Radio Controls	Steps
Programmed Text Message button	Press the programmed **Text Message** button.
Menu	**a** Press OK to access the menu.

Radio Controls	Steps
	b Press ▲ or ▼ to `Messages` and press OK to select.

2 Press ▲ or ▼ to `Inbox` and press OK to select.

3 Press ▲ or ▼ to the required message and press OK to select.

4 Press OK once more to access the sub-menu.

5 Press ▲ or ▼ to `Delete` and press OK to select.

6 Press ▲ or ▼ to `Yes` and press OK to select.

The display shows `Message Deleted`, and the screen returns to the Inbox.

5.3.19.8.4

Deleting All Text Messages from the Inbox

1 Access the **Text Message** feature.

Radio Controls	Steps
Programmed Text Message button	Press the programmed **Text Message** button.
Menu	**a** Press OK to access the menu.

Radio Controls	Steps
	b Press ▲ or ▼ to `Messages` and press OK to select.

2 Press ▲ or ▼ to `Inbox` and press OK to select.

When you select `Inbox` and it contains no text messages, the display shows `List Empty`, and sounds a low tone if Keypad Tones are turned on (see Turning Keypad Tones On or Off on page 206).

3 Press ▲ or ▼ to `Delete All` and press OK to select.

4 Press ▲ or ▼ to `Yes` and press OK to select.

The display shows `Inbox Cleared`.

5.3.20

Privacy

If enabled, this feature helps to prevent eavesdropping by unauthorized users on a channel by the use of a software-based scrambling solution. The signaling and user identification portions of a transmission are not scrambled.

Your radio must have privacy enabled on the current channel selector position to send a privacy-enabled transmission, although this is not a necessary requirement for receiving a transmission. While on a privacy-enabled channel selector position, the radio is still able to receive clear (unscrambled) transmissions.

Your radio supports Enhanced Privacy.

To unscramble a privacy-enabled call transmission, your radio must be programmed to have the same Key Value and Key ID (for Enhanced Privacy) as the transmitting radio.

If your radio receives a scrambled call that is of a different Key Value and Key ID, you hear nothing at all (Enhanced Privacy).

If the radio has a privacy type assigned, the Home screen shows the Secure or Unsecure icon, except when the radio is sending or receiving an Emergency call or alarm.

The LED lights up solid green while the radio is transmitting and blinks green rapidly when the radio is receiving an ongoing privacy-enabled transmission.

You can access this feature by performing one of the following actions:

- Press the programmed **Privacy** button to toggle privacy on or off.
- Using the Radio Menu as described by the steps described next.

NOTICE:
Some radio models may not offer this Privacy feature. Check with your dealer or system administrator for more information.

1 Press OK to access the menu.

2 Press ▲ or ▼ to `Utilities` and press OK to select.

3 Press ▲ or ▼ to `Radio Settings` or ▲ or ▼ to `Connect Plus` and press OK to select.

4 Press ▲ or ▼ to `Enhanced Privacy`.

If the display shows `Turn On`, press OK to enable Privacy. The radio displays a message confirming your selection.

If the display shows `Turn Off`, press OK to disable Privacy. The radio displays a message confirming your selection.

If the radio has a privacy type assigned, the secure or unsecure icon appears on the status bar, except when the radio is sending or receiving an Emergency Alert.

5.3.20.1

Making a Privacy-Enabled (Scrambled) Call

Toggle privacy on using the programmed privacy button or by using the menu. Your radio must have the Privacy feature enabled for the currently selected channel position to send a privacy-enabled transmission. When privacy is enabled for the currently selected channel position, all voice transmissions made by your radio will be scrambled.

This includes Group Call, Multigroup Call, talk-back during scanned calls, Site All Call, Emergency Call, and Private Call. Only receiving radios with the same Key Value and Key ID as your radio will be able to unscramble the transmission.

5.3.21

Security

You can enable or disable any radio in the system. For example, you might want to disable a stolen radio, to prevent the thief from using it, and enable that radio, when it is recovered.

NOTICE:
Performing Radio Disable and Enable is limited to radios with these functions enabled. Check with your dealer or system administrator for more information.

5.3.21.1

Radio Disable

1 Access this feature by performing one of the following actions:

Radio Controls	Steps
Radio Disable button	**a** Press the programmed **Radio Disable** button. **b** Press ▲ or ▼ to the required alias or ID and press OK to select.
Radio menu	**a** Press OK to access the menu. **b** Press ▲ or ▼ to Contacts and press OK to select. The entries are alphabetically sorted. **c** Use one of the steps described next to select the required subscriber alias or ID: • Select the required alias or ID directly.

Radio Controls	Steps
	• Press ▲ or ▼ to the required alias or ID and press OK to select. • Use the `Manual Dial` menu. • Press ▲ or ▼ to `Manual Dial` and press OK to select. • Press ▲ or ▼ to `Radio Number` and press OK to select. • The first line of the display shows `Radio Number:`. The second line of the display shows a blinking cursor. Use the keypad to enter the subscriber alias or ID and press OK . **d** Press ▲ or ▼ to `Radio Disable` and press OK to select.

The display shows `Radio Disable: <Target Alias or ID>` and the LED blinks green.

2 Wait for acknowledgement.

If successful, a positive indicator tone sounds and the display shows `Radio Disable Successful`.

If not successful, a negative indicator tone sounds and the display shows `Radio Disable Failed`.

5.3.21.2

Radio Enable

1 Access this feature by performing one of the following actions:

Radio Controls	Steps
Radio Enable button	**a** Press the programmed **Radio Enable** button. **b** Press ▲ or ▼ to the required alias or ID and press OK to select.
Radio menu	**a** Press OK to access the menu. **b** Press ▲ or ▼ to `Contacts` and press OK to select. The entries are alphabetically sorted.

	c Use one of the steps described next to select the required subscriber alias or ID
	• Select the required alias or ID directly.
	  • Press ▲ or ▼ to the required alias or ID and press OK to select.
	• Use the `Manual Dial` menu.
	  • Press ▲ or ▼ to `Manual Dial` and press OK to select.

Radio Controls	Steps
	• Press ▲ or ▼ to `Radio Number` and press OK to select. • The first line of the display shows `Radio Number:`. The second line of the display shows a blinking cursor. Use the keypad to enter the subscriber alias or ID and press OK . **d** Press ▲ or ▼ to `Radio Enable` and press OK to select.

The display shows `Radio Enable: <Subscriber Alias or ID>` and the LED lights up solid green.

2 Wait for acknowledgement.

If successful, a positive indicator tone sounds and the display shows `Radio Enable Successful.`

If not successful, a negative indicator tone sounds and the display shows `Radio Enable Failed.`

5.3.22

Bluetooth Operation

NOTICE:
If disabled via the CPS, all Bluetooth-related features are disabled and the Bluetooth device database is erased.

This feature allows you to use your radio with a Bluetooth-enabled device (accessory) via a wireless Bluetooth connection. Your radio supports both Motorola Solutions and Commercially available Off-The-Shelf (COTS) Bluetooth-enabled devices.

Bluetooth operates within a range of 10 meters (32 feet) line of sight. This is an unobstructed path between your radio and your Bluetooth-enabled device.

It is not recommended that you leave your radio behind and expect your Bluetooth-enabled device to work with a high degree of reliability when they are separated.

At the fringe areas of reception, both voice and tone quality will start to sound "garbled" or "broken". To correct this problem, simply position your radio and Bluetooth-enabled device closer to each other (within the 10-meter/32 feet defined range) to re-establish clear audio reception. Your radio's Bluetooth function has a maximum power of 2.5 mW (4 dBm) at the 10-meter/32 feet range.

Your radio can support up to 4 simultaneous Bluetooth connections with Bluetooth-enabled devices of unique types. For example, a headset, and a PTT-Only Device (POD).

Refer to your respective Bluetooth-enabled device's user manual for more details on your Bluetooth-enabled device's full capabilities.

5.3.22.1
Turning Bluetooth On and Off

1 Press OK to access the menu.

2 Press ▲ or ▼ to `Bluetooth` and press OK to select.

3 Press ▲ or ▼ to `My Status` and press OK to select.

The display shows `On` and `Off`. The current status is indicated by a ✓ .

4 Do one of the following:

- Press ▲ or ▼ to `On` and press OK to select. The display shows `On` and a ✓ appears left of the selected status.
- Press ▲ or ▼ to `Off` and press OK to select. The display shows `Off` and a ✓ appears left of the selected status.

5.3.22.2

Finding and Connecting to a Bluetooth Device

Do not turn off your Bluetooth-enabled device or press ⮌ during the finding and connecting operation as this cancels the operation.

1. Turn on your Bluetooth-enabled device and place it in pairing mode. Refer to respective Bluetooth-enabled device user manual.
2. On your radio, press OK to access the menu.
3. Press ▲ or ▼ to `Bluetooth` and press OK to select.
4. Press ▲ or ▼ to `Devices` and press OK to select.
5. Do one of the following:
   - Press ▲ or ▼ to the required device and press OK to select.
   - Press ▲ or ▼ to `Find Devices` to locate available devices. Press ▲ or ▼ to the required device and press OK to select.
6. Press ▲ or ▼ to `Connect` and press OK to select.

   Display shows `Connecting to <Device>`. Your Bluetooth-enabled device may require additional steps to complete the pairing. Refer to respective Bluetooth-enabled device user manual.

If successful, the radio display shows `<Device>Connected`. A tone sounds and ✓ appears besides the connected device. The Bluetooth Connected icon appears on the status bar.

If unsuccessful, the radio display shows `Connecting Failed`.

5.3.22.3

Finding and Connecting from a Bluetooth Device (Discoverable Mode)

Do not turn off your Bluetooth or your radio during the finding and connecting operation as this may cancel the operation.

1 Turn Bluetooth On.

See Turning Bluetooth On and Off on page 304.

2 Press OK to access the menu.

3 Press ▲ or ▼ to `Bluetooth` and press OK to select.

4 Press ▲ or ▼ to `Find Me` and press OK to select.

Your radio can now be found by other Bluetooth-enabled devices for a programmed duration. This is called Discoverable Mode.

5 Turn on your Bluetooth-enabled device and pair it with your radio.

Refer to respective Bluetooth-enabled device user manual.

5.3.22.4

Disconnecting from a Bluetooth Device

1 On your radio, press OK to access the menu.

2 Press ▲ or ▼ to `Bluetooth` and press OK to select.

3 Press ▲ or ▼ to `Devices` and press OK to select.

4 Press ▲ or ▼ to the required device and press OK to select.

5 Press ▲ or ▼ to `Disconnect` and press OK to select.

Display shows `Disconnecting from <Device>`. Your Bluetooth-enabled device may require additional steps to disconnect. Refer to respective Bluetooth-enabled device user manual.

The radio display shows `<Device> Disconnected`. A positive indicator tone sounds and ✓ disappears beside the connected device. The Bluetooth Connected icon disappears on the status bar.

5.3.22.5

Switching Audio Route between Internal Radio Speaker and Bluetooth Device

You can toggle audio routing between internal radio speaker and external Bluetooth-enabled accessory.

Press the programmed **Bluetooth Audio Switch** button.

- A tone sounds and display shows `Route Audio to Radio`.
- A tone sounds and display shows `Route Audio to Bluetooth`.

5.3.22.6

Viewing Device Details

1 Press OK to access the menu.

2 Press ▲ or ▼ to `Bluetooth` and press OK to select.

3 Press ▲ or ▼ to `Devices` and press OK to select.

4 Press ▲ or ▼ to the required device and press OK to select.

5 Press ▲ or ▼ to `View Details` and press OK to select.

5.3.22.7

Deleting Device Name

You can remove a disconnected device from the list of Bluetooth-enabled devices.

1 Press OK to access the menu.

2 Press ▲ or ▼ to `Bluetooth` and press OK to select.

3 Press ▲ or ▼ to `Devices` and press OK to select.

4 Press ▲ or ▼ to the required device and press OK to select.

5 Press ▲ or ▼ to `Delete` and press OK to select.

The display shows `Device Deleted`.

5.3.22.8

Bluetooth Mic Gain

Allows control of the connected Bluetooth-enabled device microphone gain value.

1 Press OK to access the menu.

2 Press ▲ or ▼ to `Bluetooth` and press OK to select.

3 Press ▲ or ▼ to `BT Mic Gain` and press OK to select.

4 Press ▲ or ▼ to the BT Mic Gain type and the current values.

To edit values, press OK to select.

5 Press ▲ or ▼ to increase or to decrease values and press OK to select.

5.3.23

Indoor Location

NOTICE:
Indoor Location feature is applicable for models with the latest software and hardware. Check with your dealer or system administrator for more information.

Indoor Location is use to keep track of the location of radio users. When Indoor Location is activated, the radio is in a limited discoverable mode. Dedicated beacons are used to locate the radio and determine its position.

5.3.23.1

Turning Indoor Location On or Off

You can turn on or turn off Indoor Location by performing one of the following actions.

- Access this feature through the menu.

a. Press OK to access the menu.

b. Press ▲ or ▼ to `Bluetooth` and press OK to select.

c. Press ▲ or ▼ to `Indoor Location` and press OK to select.

d. Press OK to turn on Indoor Location.

The display shows `Indoor Location On`. You hear a positive indicator tone.
One of the following scenarios occurs.

- If successful, the Indoor Location Available icon appears on the Home screen display.
- If unsuccessful, the display shows `Turning On Failed`. You hear a negative indicator tone.

e. Press OK to turn off Indoor Location.

The display shows `Indoor Location Off`. You hear a positive indicator tone.
One of the following scenarios occurs.

- If successful, the Indoor Location Available icon disappears on the Home screen display.
- If unsuccessful, the display shows `Turning Off Failed`. You hear a negative indicator tone.

- Access this feature by using the programmed button.
  a. Long press the programmed **Indoor Location** button to turn on Indoor Location.

     The display shows `Indoor Location On`. You hear a positive indicator tone.
     One of the following scenarios occurs.
     - If successful, the Indoor Location Available icon appears on the Home screen display.
     - If unsuccessful, the display shows `Turning On Failed`. If unsuccessful, you hear a negative indicator tone.

  b. Press the programmed **Indoor Location** button to turn off Indoor Location.

     The display shows `Indoor Location Off`. You hear a positive indicator tone.
     One of the following scenarios occurs.
     - If successful, the Indoor Location Available icon disappears on the Home screen display.
     - If unsuccessful, the display shows `Turning Off Failed`. If unsuccessful, you hear a negative indicator tone.

5.3.23.2

Accessing Indoor Location Beacons Information

Follow the procedure to access Indoor Location beacons information.

1. Press OK to access the menu.
2. Press ▲ or ▼ to `Bluetooth` and press OK to select.
3. Press ▲ or ▼ to `Indoor Location` and press OK to select.

4 Press ▲ or ▼ to Beacons and press OK to select.

The display shows the beacons information.

5.3.24

Notification List

Your radio has a Notification List that collects all your "unread" events on the channel, such as unread text messages, missed calls, and call alerts.

The Notification icon appears on the status bar when the Notification List has one or more events.

The list supports a maximum of 40 unread events. When it is full, the next event automatically replaces the oldest event.

NOTICE:
After the events are read, they are removed from the Notification List.

5.3.24.1

Accessing the Notification List

Follow the procedure to access the notification list.

1 Press OK to access the menu.

2 Press ▲ or ▼ to Notification and press OK to select.

3 Press ▲ or ▼ to the required event and press OK to select.

Long press ⮌ to return to the Home Screen.

5.3.25

Wi-Fi Operation

This feature allows you to set up and connect to a Wi-Fi network. Wi-Fi supports updates for radio firmware, codeplug, and resources such as language packs and voice announcement.

NOTICE:
This feature is applicable to XiR M8668i/CM7668i only.

Wi-Fi® is a registered trademark of Wi-Fi Alliance®.

Your radio supports WEP/WPA/WPA2-Personal and WPA/WPA2-Enterprise Wi-Fi networks.

WEP/WPA/WPA2-Personal Wi-Fi network

Uses pre-shared key (password) based authentication.

Pre-shared key can be entered by using the menu or CPS/RM.

WPA/WPA2-Enterprise Wi-Fi network

Uses certificate-based authentication.

Your radio must be pre-configured with a certificate.

NOTICE:
Check with your dealer or system administrator to connect to WPA/WPA2-Enterprise Wi-Fi network.

The programmed **Wi-Fi On or Off** button is assigned by your dealer or system administrator. Check with your dealer or system administrator to determine how your radio has been programmed.

Voice Announcements for the programmed **Wi-Fi On or Off** button can be customized through CPS according to user requirements. Check with your dealer or system administrator for more information.

NOTICE:
You can turn on or turn off Wi-Fi remotely by using a designated radio (see Turning Wi-Fi On or Off Remotely by Using a Designated Radio (Individual Control) on page 196 and Turning Wi-Fi On or Off Remotely by Using a Designated Radio (Group Control) on page 196). Check with your dealer or system administrator for more information.

5.3.25.1

Turning Wi-Fi On or Off

1 Press the programmed **Wi-Fi On or Off** button. Voice Announcement sounds Turning On Wi-Fi or Turning Off Wi-Fi.

2 Access this feature using the menu.

a Press OK to access the menu.

b Press ▲ or ▼ to `WiFi` and press OK to select.

c Press ▲ or ▼ to `WiFi On` and press OK to select.

d Press OK to turn on/off Wi-Fi.

If Wi-Fi is on, the display shows ✓ beside `Enabled`.

If Wi-Fi is off, the ✓ disappears from beside `Enabled`.

5.3.25.2

Turning Wi-Fi On or Off Remotely by Using a Designated Radio (Individual Control)

You can turn Wi-Fi on or off remotely in Individual Control (One to One).

NOTICE:
Only radio with specific CPS setting supports this function, check with your dealer or system administrator for more information.

1 Do one of the following:

- Long press the programmable button. Use the keypad to enter the ID and press OK to select. Proceed to step 3.
- Press OK to access the menu.

2 Press ▲ or ▼ to `Contacts` and press OK to select.

3 Press ▲ or ▼ to `WiFi Control` and press OK to select.

4 Press ▲ or ▼ to select `On` or `Off`.

5 Press OK to select.

If successful, the display shows a positive mini notice.

If unsuccessful, the display shows a negative mini notice.

5.3.25.3

Turning Wi-Fi On or Off Remotely by Using a Designated Radio (Group Control)

You can turn Wi-Fi on or off remotely in Group Control (One to Many).

NOTICE:
Only radio with specific CPS setting supports this function, check with your dealer or system administrator for more information.

1. Press OK to access the menu.
2. Press ▲ or ▼ to `Contacts` and press OK to select.
3. Press ▲ or ▼ to select the required subscriber alias or ID.
4. Press ▲ or ▼ to `WiFi Control` and press OK to select.
5. Press ▲ or ▼ to select `On` or `Off`.
6. Press OK to select.

If successful, the display shows `Sent Successfully`.

If unsuccessful, the display shows a negative mini notice.

5.3.25.4

Connecting to a Network Access Point

When you turn on Wi-Fi, the radio scans and connects to a network access point.

NOTICE:
You can also connect to a network access point using the menu.

The WPA-Enterprise Wi-Fi network access points are pre-configured. Check with your dealer or system administrator to determine how your radio has been programmed.

1. Press OK to access the menu.

2 Press ▲ or ▼ to `WiFi` and press OK to select.

3 Press ▲ or ▼ to `Networks` and press OK to select.

4 Press ▲ or ▼ to a network access point and press OK to select.

NOTICE:
For WPA-Enterprise Wi-Fi, if a network access point is not preconfigured, the `Connect` option is not available.

5 Press ▲ or ▼ to `Connect` and press OK to select.

6 For WPA-Personal Wi-Fi, enter the password and press OK .

7 For WPA-Enterprise Wi-Fi, password is configured by using RM.

If the preconfigured password is correct, your radio automatically connects to the selected network access point.

If the preconfigured password is incorrect, the display shows `Authentication Failure`, and automatically returns to the previous menu.

If the connection is successful, the radio displays a notice and the network access point is saved into the profile list.

If the connection is unsuccessful, the radio displays shows the failure notice screen momentarily and automatically returns to the previous menu.

5.3.25.5
Checking Wi-Fi Connection Status

Press the programmed **Wi-Fi Status Query** button for the connection status by using Voice Announcement. Voice

Announcement sounds Wi-Fi is Off, Wi-Fi is On but No Connection, or Wi-Fi is On with Connection.

- The display shows `WiFi Off` when the Wi-Fi is turned off.
- The display shows `WiFi On, Connected` when the radio is connected to a network.
- The display shows `WiFi On, Disconnected` when the Wi-Fi is turned on but the radio is not connected to any network.

  Voice Announcements for the Wi-Fi status query results can be customized through CPS according to user requirements. Check with your dealer or system administrator for more information.

  NOTICE:
  The programmed **Wi-Fi Status Query** button is assigned by your dealer or system administrator. Check with your dealer or system administrator to determine how your radio has been programmed.

5.3.25.6

Refreshing the Network List

- Perform the following actions to refresh the network list through the menu.

  a. Press OK to access the menu.

  b. Press ▲ or ▼ to `WiFi` and press OK to select.

  c. Press ▲ or ▼ to `Networks` and press OK to select.

  When you enter the Networks menu, the radio automatically refreshes the network list.

- If you are already in the Networks menu, perform the following action to refresh the network list.

  Press ▲ or ▼ to `Refresh` and press OK to select.

  The radio refreshes and displays the latest network list.

5.3.25.7

Adding a Network

NOTICE:
This task is not applicable to WPA-Enterprise Wi-Fi networks.

If a preferred network is not in the available network list, perform the following actions to add a network.

1. Press OK to access the menu.
2. Press ▲ or ▼ to WiFi and press OK to select.
3. Press ▲ or ▼ to Networks and press OK to select.
4. Press ▲ or ▼ to Add Network and press OK to select.
5. Enter the Service Set Identifier (SSID) and press OK .
6. Press ▲ or ▼ to Open and press OK to select.
7. Enter the password and press OK .

   The radio displays a positive mini notice to indicate that the network is successfully saved.

5.3.25.8

Viewing Details of Network Access Points

You can view details of network access points.

1. Press OK to access the menu.
2. Press ▲ or ▼ to WiFi and press OK to select.
3. Press ▲ or ▼ to Networks and press OK to select.

4 Press ▲ or ▼ to a network access point and press OK to select.

5 Press ▲ or ▼ to `View Details` and press OK to select.

NOTICE:
WPA-Personal Wi-Fi and WPA-Enterprise Wi-Fi display different details of Network Access Points.

WPA-Personal Wi-Fi

For a connected network access point, your radio displays Service Set Identifier (SSID), Security Mode, Media Access Control (MAC) address, and Internet Protocol (IP) address.

For a non-connected network access point, your radio displays SSID and Security Mode.

WPA-Enterprise Wi-Fi

For a connected network access point, your radio displays SSID, Security Mode, Identity, Extended Authentication Protocol (EAP) Method, Phase 2 Authentication, Cert Name, MAC address, IP address, Gateway, DNS1, and DNS2.

For a non-connected network access point, your radio displays SSID, Security Mode, Identity, EAP Method, Phase 2 Authentication, and Cert Name.

5.3.25.9
Removing Network Access Points

NOTICE:
This task is not applicable to Enterprise Wi-Fi networks.

Perform the following actions to remove network access points from the profile list.

1 Press OK to access the menu.

2 Press ▲ or ▼ to `WiFi` and press OK to select.

3 Press ▲ or ▼ to `Networks` and press OK to select.

4 Press ▲ or ▼ to the selected network access point and press OK to select.

5 Press ▲ or ▼ to `Remove` and press OK to select.

6 Press ▲ or ▼ to `Yes` and press OK to select.

The radio displays a positive mini notice to indicate that the selected network access point is successfully removed.

5.3.26

Utilities

This chapter explains the operations of the utility functions available in your radio.

5.3.26.1

Turning the Radio Tones/Alerts On or Off

You can enable and disable all radio tones and alerts (except for the incoming Emergency alert tone) if needed.

Press the programmed **All Tones/Alerts** button to toggle all tones on or off, or follow the procedure described next to access this feature via the radio menu.

1 Press OK to access the menu.

2 Press ▲ or ▼ to `Utilities` and press OK to select.

3 Press ▲ or ▼ to `Radio Settings` and press OK to select.

4 Press ▲ or ▼ to `Tones/Alerts` and press OK to select.

5 Press ▲ or ▼ to `All Tones` and press OK to select.

6 Press OK to enable/disable all tones and alerts.

The display shows ✓ beside `Enabled`.

The ✓ disappears from beside `Enabled`.

5.3.26.2

Setting the Tone Alert Volume Offset Level

You can adjust the Tone Alert Volume Offset level if needed. This feature adjusts the volume of the tones/alerts, allowing it to be higher or lower than the voice volume.

1 Press OK to access the menu.

2 Press ▲ or ▼ to `Utilities` and press OK to select.

3 Press ▲ or ▼ to `Radio Settings` and press OK to select.

4 Press ▲ or ▼ to `Tones/Alerts` and press OK to select.

5 Press ▲ or ▼ to `Vol. Offset` and press OK to select.

6 Press ▲ or ▼ to the required volume value.

The radio sounds a feedback tone with each corresponding volume value.

7 Do one of the following:

- Press OK to keep the required displayed volume value.
- Press ↩ to exit without changing the current volume offset settings.

5.3.26.3

Turning the Talk Permit Tone On or Off

You can enable and disable the Talk Permit Tone if needed.

1 Press OK to access the menu.

2 Press ▲ or ▼ to `Utilities` and press OK to select.

3 Press ▲ or ▼ to `Radio Settings` and press OK to select.

4 Press ▲ or ▼ to `Tones/Alerts` and press OK to select.

5 Press ▲ or ▼ to `Talk Permit` and press OK to select.

6 Press OK to enable/disable the Talk Permit Tone.

The display shows ✓ beside `Enabled`.

The ✓ disappears from beside `Enabled`.

5.3.26.4

Turning the Power Up Alert Tone On or Off

You can enable and disable the Power Up Alert Tone if needed.

1 Press OK to access the menu.

2 Press ▲ or ▼ to `Utilities` and press OK to select.

3 Press ▲ or ▼ to `Radio Settings` and press OK to select.

4 Press ▲ or ▼ to Tones/Alerts and press OK to select.

5 Press ▲ or ▼ to Power Up and press OK to select.

6 Press OK to enable/disable the Power Up Alert Tone.

The display shows ✓ beside Enabled.

The ✓ disappears from beside Enabled.

5.3.26.5

Setting the Power Level

You can customize your radio power setting to high or low for each Connect Plus zone.

High enables communication with tower sites in Connect Plus mode located at a considerable distance from you. Low enables communication with tower sites in Connect Plus mode in closer proximity.

Press the programmed **Power Level** button to toggle transmit power level between high and low.

Follow the procedure described next to access this feature via the radio menu.

1 Press OK to access the menu.

2 Press ▲ or ▼ to Utilities and press OK to select.

3 Press ▲ or ▼ to Radio Settings and press OK to select.

4 Press ▲ or ▼ to Power and press OK to select.

5 Press ▲ or ▼ to the required setting and press OK to select.

✓ appears beside selected setting. At any time, long press to return to the Home screen.

Screen returns to the previous menu.

5.3.26.6

Changing the Display Mode

You can change radio display mode between Day or Night, as needed. This affects the color palette of the display.

1 Press OK to access the menu.

2 Press or to Utilities and press OK to select.

3 Press or to Radio Settings and press OK to select.

4 Press or to Display and press OK to select.

The display shows Day Mode and Night Mode.

5 Press or to the required setting and press OK to enable. ✓ appears besides selected setting.

5.3.26.7

Adjusting the Display Brightness

You can adjust the display brightness of the radio as needed.

NOTICE:
Display brightness cannot be adjusted when Auto Brightness is enabled.

1 Press OK to access the menu.

2 Press or to Utilities and press OK to select.

3 Press ▲ or ▼ to Radio Settings and press OK to select.

4 Press ▲ or ▼ to Display and press OK to select.

5 Press ▲ or ▼ to Brightness and press OK to select.

The display shows a progress bar.

6 Decrease display brightness by pressing ▲ or increase the display brightness by pressing ▼ .

Select from setting of 1 to 8. Press OK to confirm your entry.

5.3.26.8

Turning the Introduction Screen On or Off

You can enable and disable the Introduction Screen if needed.

1 Press OK to access the menu.

2 Press ▲ or ▼ to Utilities and press OK to select.

3 Press ▲ or ▼ to Radio Settings and press OK to select.

4 Press ▲ or ▼ to Display and press OK to select.

5 Press ▲ or ▼ to Intro Screen and press OK to select.

6 Press OK to enable/disable the Introduction Screen.

The display shows ✓ beside Enabled.

The ✓ disappears from beside Enabled.

5.3.26.9

Language

You can set your radio display to be in your required language.

1 Press OK to access the menu.

2 Press ▲ or ▼ to Utilities and press OK to select.

3 Press ▲ or ▼ to Radio Settings and press OK to select.

4 Press ▲ or ▼ to Languages and press OK to select.

5 Press ▲ or ▼ to the required language and press OK to enable. ✓ appears beside selected language.

5.3.26.10

Turning the LED Indicator On or Off

You can enable and disable the LED Indicator if needed.

1 Press OK to access the menu.

2 Press ▲ or ▼ to Utilities and press OK to select.

3 Press ▲ or ▼ to Radio Settings and press OK to select.

4 Press ▲ or ▼ to `LED Indicator` and press OK to select.

5 Press OK to enable/disable the LED Indicator.

The display shows ✓ beside `Enabled`.

The ✓ disappears from beside `Enabled`.

5.3.26.11

Identifying Cable Type

You can select the type of cable your radio uses.

1 Press OK to access the menu.

2 Press ▲ or ▼ to `Utilities` and press OK to select.

3 Press ▲ or ▼ to `Radio Settings` and press OK to select.

4 Press ▲ or ▼ to `Cable Type` and press OK to select.

5 The current cable type is indicated by a ✓ .

5.3.26.12

Voice Announcement

This feature enables the radio to audibly indicate the current Zone or Channel the user has just assigned, or programmable button press. This audio indicator can be customized per customer requirements. This is typically useful when the user is in a difficult condition to read the content shown on the display.

1 Press OK to access the menu.

2 Press ▲ or ▼ to `Utilities` and press OK to select.

3 Press ▲ or ▼ to `Radio Settings` and press OK to select.

4 Press ▲ or ▼ to `Voice Announcement` and press OK to select.

You can also use or to change the selected option.

5 Do one of the following:

- Press OK to enable Voice Announcement. The display shows ✓ beside `Enabled`.
- Press OK to disable Voice Announcement. The ✓ disappears from beside `Enabled`.

5.3.26.13

Menu Timer

Set the period of time your radio stays in the menu before it automatically switches to the Home screen.

1 Press OK to access the menu.

2 Press ▲ or ▼ to `Utilities` and press OK to select.

3 Press ▲ or ▼ to `Radio Settings` and press OK to select.

4 Press ▲ or ▼ to `Display` and press OK to select.

5 Press ▲ or ▼ to `Menu Timer` and press OK to select.

6 Press ▲ or ▼ to the required setting and press OK to select.

5.3.26.14

Turning Horns/Lights On or Off

This feature needs to be installed through the rear accessory connector of your radio by your dealer.

Your radio is able to notify you of an incoming call via the horns and lights feature. When activated, an incoming call sounds your vehicle's horn and turns on its lights.

1 Do one of the following:
   - Press the programmed **Horns/Lights** button to toggle horns and light feature on or off. Skip the following steps.
   - Press OK to access the menu.

2 Press ▲ or ▼ to `Utilities` and press OK to select.

3 Press ▲ or ▼ to `Radio Settings` and press OK to select.

4 Press ▲ or ▼ to `Horn/Lights` and press OK to select.

5 Press OK to enable/disable Horns/Lights.

   The display shows ✓ beside `Enabled`.

   The ✓ disappears from beside `Enabled`.

5.3.26.15

Setting Dual Knob Operation Preference

Your radio has a dual-purpose **Volume/Channel Knob**. Disabling the dual-purpose option sets the knob to work as a Volume Knob only.

1 OK to access the menu.

2 ▲ or ▼ to `Utilities` and press OK to select.

3 ▲ or ▼ to `Radio Settings` and press OK to select.

4 ▲ or ▼ to `Dual Knob` and press OK to select.

5 The display shows `Volume Only` and `Volume & Ch`.

▲ or ▼ to the required setting and press OK to select.

✓ appears beside selected setting.

Screen returns to the previous menu.

5.3.26.16

Digital Mic AGC (Mic AGC-D)

This feature controls the your radio's microphone gain automatically while transmitting on a digital system. It suppresses loud audio or boosts soft audio to a preset value in order to provide a consistent level of audio.

1 Press OK to access the menu.

2 Press ▲ or ▼ to `Utilities` and press OK to select.

3 Press ▲ or ▼ to `Radio Settings` and press OK to select.

4 Press ▲ or ▼ to `Mic AGC-D` and press OK to select.

5 Do one of the following:

- Press OK to enable **Mic AGC-D** . The display shows ✓ beside `Enabled` .
- Press OK to disable **Mic AGC-D** . The ✓ disappears from beside `Enabled` .

5.3.26.17

Intelligent Audio

Your radio can automatically adjust its audio volume to overcome background noise in the environment, inclusive of all stationary and non-stationary noise sources. This feature is a Receive-only feature and does not affect Transmit audio.

1 Press OK to access the menu.

Radio Control	Steps
Menu	**a** Press OK to access the menu. **b** Press ▲ or ▼ to `Radio Settings` and press OK to select. **c** Press ▲ or ▼ to `Radio Settings` and press OK to select. **d** Press ▲ or ▼ to `Intelligent Audio` and press OK to select. **NOTICE:** You can also use or to change the selected option. **e** Do one of the following:

Radio Control	Steps
	• Press OK to enable Intelligent Audio. The display shows ✓ beside `Enabled`. • Press OK to disable Intelligent Audio. The ✓ disappears from beside `Enabled`.

2 Press ▲ or ▼ to `Utilities` and press OK to select.

3 Press ▲ or ▼ to `Radio Settings` and press OK to select.

4 Press ▲ or ▼ to `Intelligent Audio` and press OK to select.

5 Do one of the following:

- Press OK to enable Intelligent Audio. The display shows ✓ beside Enabled.
- Press OK to disable Intelligent Audio. The ✓ disappears from beside Enabled.

See Authorized Accessories List for recommended Bluetooth-enabled audio accessories with in-built Automatic Volume Control for similar performance.

5.3.26.18

Turning the Acoustic Feedback Suppressor Feature On or Off

This feature allows you to minimize acoustic feedback in received calls.

1 Press OK to access the menu.

2 Press ▲ or ▼ to Utilities and press OK to select.

3 Press ▲ or ▼ to Radio Settings and press OK to select.

4 Press ▲ or ▼ to AF Suppressor and press OK to select.

You can also use or to change the selected option.

5 Do one of the following.

- Press OK to enable Acoustic Feedback Suppressor. The display shows ✓ beside Enabled.
- Press OK to disable Acoustic Feedback Suppressor. The ✓ disappears from beside Enabled.

5.3.26.19

Turning GNSS On or Off

Global Navigation Satellite System (GNSS) is a satellite navigation system that determines the radio precise location. GNSS includes Global Positioning System (GPS),

Global Navigation Satellite System (GLONASS), and BeiDou Navigation Satellite System (BDS).

NOTICE:
Selected radio models may offer GPS, GLONASS, and BDS. GNSS constellation is configured by using CPS. Check with your dealer or system administrator to determine how your radio has been programmed.

1 Do one of the following:
- Press the programmed **GNSS** button to toggle the feature on or off. Skip the following steps.
- Press OK to access the menu.

2 Press ▲ or ▼ to `Utilities`. Press OK to select.

3 Press ▲ or ▼ to `Radio Settings`. Press OK to select.

4 Press ▲ or ▼ to `GNSS`. Press OK to select.

5 Press OK to enable/disable GNSS.

If enabled, ✔ appears beside `Enabled`.

If disabled, ✔ disappears beside `Enabled`.

See Checking the GNSS Information on page 343 for details on retrieving GNSS information.

5.3.26.20

Accessing General Radio Information

Your radio contains information on the following:

- Battery
- Degree of Tilt (Accelerometer)
- Radio Model Number Index
- Option Board Over-the-Air (OTA) Codeplug CRC
- Site Number
- Site Info
- Radio Alias and ID
- Firmware and Codeplug Versions
- GNSS Information

Press at any time to return to the previous screen or long press to return to the Home screen. The radio exits the current screen once the inactivity timer expires.

5.3.26.20.1

Checking the Radio Model Number Index

This index number identifies your radio model-specific hardware. Your radio system administrator may ask for this number when preparing a new Option Board codeplug for your radio.

1. Press OK to access the menu.
2. Press or to Utilities and press OK to select.
3. Press or to Radio Info and press OK to select.
4. Press or to Model Index and press OK to select.

   The display shows the Model Number Index.

5.3.26.20.2

Checking the CRC of the Option Board OTA Codeplug File

Follow the instructions below if your radio system administrator asks you to view the Option Board OTA Codeplug File CRC (Cyclic Redundancy Check). This menu option only appears if the Option Board received its last codeplug update OTA.

1. Press OK to access the menu.
2. Press or to Utilities and press OK to select.
3. Press or to Radio Info and press OK to select.

4 Press ▲ or ▼ to `OB OTA CPcrc` and press OK to select.

The display shows some letters and numbers. Communicate this information to your radio system administrator exactly as shown.

5.3.26.20.3

Displaying the Site ID (Site Number)

NOTICE:
If you are not currently registered at a site, the display shows `Not Registered`.

The radio briefly shows the Site ID as it registers with a Connect Plus site. Following registration, the radio does not generally indicate the Site number. To display the registered Site number, do the following:

1 Press OK to access the menu.

2 Press ▲ or ▼ to `Utilities` and press OK to select.

3 Press ▲ or ▼ to `Radio Info` and press OK to select.

4 Press ▲ or ▼ to `Site Number` and press OK to select.

The display shows the Network ID and the Site Number.

5.3.26.20.4

Checking the Site Info

NOTICE:
If you are not currently registered at a site, the display shows `Not Registered`.

The Site Info feature provides information that can be useful to a service technician. It consists of the following information:

- Repeater number of current Control Channel repeater.
- RSSI: Last signal strength value measured from Control Channel repeater.

- Neighbor List sent by Control Channel repeater (five numbers separated by commas).

If you are requested to use this feature, please report the displayed information exactly as it appears on the screen.

1. Press OK to access the menu.
2. Press ▲ or ▼ to `Utilities` and press OK to select.
3. Press ▲ or ▼ to `Radio Info` and press OK to select.
4. Press ▲ or ▼ to `Site Info` and press OK to select.

   The display shows the Site Info.

5.3.26.20.5

Checking the Radio ID

This feature displays the ID of your radio.

Follow the procedure described next to access this feature via the radio screen.

1. Press OK to access the menu.
2. Press ▲ or ▼ to `Utilities` and press OK to select.
3. Press ▲ or ▼ to `Radio Info` and press OK to select.
4. Press ▲ or ▼ to `My ID` and press OK to select.

   The display shows the radio ID.

5.3.26.20.6

Checking the Firmware Version and Codeplug Version

Displays the firmware version on your radio.

1. Press OK to access the menu.
2. Press ▲ or ▼ to `Utilities` and press OK to select.
3. Press ▲ or ▼ to `Radio Info` and press OK to select.
4. Press ▲ or ▼ to `Versions` and press OK to select.

   The display a list with the following information:

   - (Radio) Firmware Version
   - (Radio) Codeplug Version
   - Option Board Firmware Version
   - Option Board Frequency Version
   - Option Board Hardware Version
   - Option Board Codeplug Version

5.3.26.20.7

Checking for Updates

Connect Plus provides the ability to update certain files (Option Board Codeplug, Network Frequency File, and Option Board Firmware File) Over-The-Air (OTA).

NOTICE:
Check with the dealer or network administrator to determine whether this feature has been enabled for your radio.

Any display Connect Plus radio has the ability to show its current Option Board OTA Codeplug CRC, Frequency File version or Option Board firmware file version by using a menu option. In addition, display radios that have been enabled for over-the-air file transfer can display the version of a "pending file". A "pending file" is a Frequency File or Option Board firmware file that the Connect Plus radio knows about through system messaging, but the radio has not yet collected all of the file packets. If a display Connect Plus radio has a pending file, the menu provides options to:

- See the version number of the pending file.

- See what percentage of packets has been collected so far.
- Request the Connect Plus radio to resume collecting file packets.

If the radio is enabled for Connect Plus OTA file transfer, there may be times when the radio automatically joins a file transfer without first notifying the radio user. While the radio is collecting file packets, the LED rapidly blinks red and the radio displays the High Volume Data icon on the Home Screen status bar.

NOTICE:
The Connect Plus radio cannot collect file packets and receive calls at the same time. If you wish to cancel the file transfer, press and release the **PTT** button. This causes the radio to request a call on the selected Contact Name, and it will also cancel the file transfer for that radio until the process resumes at a later time.

There are several things that can make the file transfer process start again. The first example applies to all OTA file types. The other examples apply only to the Network Frequency File and Option Board Firmware File:

- The radio system administrator re-initiates the OTA file transfer.
- The Option Board pre-defined timer expires, which causes the Option Board to automatically resume the process of collecting packets.
- The timer has not yet expired, but the radio user requests the file transfer to resume through the menu option.

After the Connect Plus radio finishes downloading all file packets, it must upgrade to the newly acquired file. For the Network Frequency File, this is an automatic process and does not require a radio reset. For the Option Board Codeplug File, this is an automatic process that will cause a brief interruption to service as the Option Board loads the new codeplug information and re-acquires a network site. How quickly the radio upgrades to a new Option Board firmware file depend on how the radio has been configured by the dealer or system administrator. The radio will either upgrade immediately after collecting all file packets, or it will wait until the next time that the user turns the radio on.

NOTICE:
Check with your dealer or system administrator to determine how your radio has been programmed.

The process of upgrading to a new Option Board firmware file takes several seconds, and it requires the Connect Plus Option Board to reset the radio. Once the upgrade starts, the radio user will not be able to make or receive calls until

the process is completed. During the process, radio display prompts user to not turn off the radio.

5.3.26.20.7.1

Firmware File

The following section provides information on the radio firmware.

5.3.26.20.7.1.1

Firmware Up to Date

NOTICE:
If the Option Board firmware file is not Up to Date (and if the radio has partially collected a more recent Option Board firmware file version) the radio displays a list with additional options; `Version`, `%Received`, and `Download`.

1. Press OK to access the menu.
2. Press ▲ or ▼ to `Utilities` and press OK to select.
3. Press ▲ or ▼ to `Radio Info` and press OK to select.
4. Press ▲ or ▼ to `Updates` and press OK to select.
5. Press ▲ or ▼ to `Firmware` and press OK to select.

   The display shows `Firmware is Up to Date`.

5.3.26.20.7.2

Pending Firmware – Version

1. Press OK to access the menu.
2. Press ▲ or ▼ to `Utilities` and press OK to select.
3. Press ▲ or ▼ to `Radio Info` and press OK to select.

4 Press ▲ or ▼ to `Updates` and press OK to select.

5 Press ▲ or ▼ to `Firmware` and press OK to select.

6 Press ▲ or ▼ to `Version` and press OK to select.

If there is a pending Option Board firmware file, the display shows the pending firmware version number.

If there is a pending Option Board firmware file, the display shows `Firmware is Up to Date`.

5.3.26.20.7.3

Pending Firmware – % Received

1 Press OK to access the menu.

2 Press ▲ or ▼ to `Utilities` and press OK to select.

3 Press ▲ or ▼ to `Radio Info` and press OK to select.

4 Press ▲ or ▼ to `Updates` and press OK to select.

5 Press ▲ or ▼ to `Firmware` and press OK to select.

6 Press ▲ or ▼ to `%Received` and press OK to select.

The screen displays the percentage of firmware file packets collected so far.

NOTICE:
When at 100%, the radio needs to be power cycled Off and then On to initiate the firmware upgrade.

5.3.26.20.7.4

Pending Firmware – Download

If the Connect Plus radio has previously left an OTA Option Board Firmware File Transfer with a partial file, the unit automatically rejoins the file transfer (if still ongoing) when an internal timer expires. If you want the unit to rejoin an ongoing Option Board Firmware File transfer prior to expiration of this internal timer, use the Download option as described below.

1 Press OK to access the menu.

2 Press ▲ or ▼ to `Utilities` and press OK to select.

3 Press ▲ or ▼ to `Radio Info` and press OK to select.

4 Press ▲ or ▼ to `Updates` and press OK to select.

5 Press ▲ or ▼ to `Firmware` and press OK to select.

6 Press ▲ or ▼ to `Download` and press OK to select.

The display shows the following:

Download Available	`Start Download`
No Download Available	`Download not available`

7 Do one of the following:

- Select `Yes` and press OK to start the download.
- Select `No` and press OK to return to the previous menu.

5.3.26.20.7.5

Frequency File

The following section provides information on the frequency file of the radio.

5.3.26.20.7.5.1

Frequency File Up to Date

NOTICE:
If the Frequency File is not Up to Date (and if the radio has partially collected a more recent frequency file version) the radio displays a list with additional options; `Version`, `%Received`, and `Download`.

1. Press OK to access the menu.
2. Press ▲ or ▼ to `Utilities` and press OK to select.
3. Press ▲ or ▼ to `Radio Info` and press OK to select.
4. Press ▲ or ▼ to `Frequency` and press OK to select.

   The display shows `Freq. File is Up to Date`.

5.3.26.20.7.5.2

Frequency File Pending – Version

1. Press OK to access the menu.
2. Press ▲ or ▼ to `Utilities` and press OK to select.
3. Press ▲ or ▼ to `Radio Info` and press OK to select.
4. Press ▲ or ▼ to `Updates` and press OK to select.
5. Press ▲ or ▼ to `Frequency` and press OK to select.

6 Press ▲ or ▼ to Version and press OK to select.

If there is a pending Frequency File, the display shows the pending Frequency File version number.

5.3.26.20.7.5.3

Frequency File Pending – % Received

1 Press OK to access the menu.

2 Press ▲ or ▼ to Utilities and press OK to select.

3 Press ▲ or ▼ to Radio Info and press OK to select.

4 Press ▲ or ▼ to Updates and press OK to select.

5 Press ▲ or ▼ to %Received and press OK to select.

The screen displays the percentage of frequency file packets collected so far.

5.3.26.20.7.5.4

Frequency File Pending – Download

If the Connect Plus radio has previously left an OTA Network Frequency File Transfer with a partial file, the unit automatically rejoins the file transfer (if still ongoing) when an internal timer expires. If you want the unit to rejoin an ongoing Network Frequency File transfer prior to expiration of this internal timer, use the Download option as described below.

1 Press OK to access the menu.

2 Press ▲ or ▼ to Utilities and press OK to select.

3 Press ▲ or ▼ to Radio Info and press OK to select.

4 Press ▲ or ▼ to Updates and press OK to select.

5 Press ▲ or ▼ to Frequency and press OK to select.

6 Press ▲ or ▼ to Download and press OK to select.

Download Currently Unavailable	Download not available
Download Currently Available	Start Download

7 Do one of the following:

- Select Yes and press to start the download.
- Select No and press to return to the previous menu.

5.3.26.20.7.6

Checking the GNSS Information

Displays the GNSS information on your radio, such as values of:

- Latitude
- Longitude
- Altitude
- Direction
- Velocity
- Horizontal Dilution of Precision (HDOP)
- Satellites
- Version

1 Press OK to access the menu.

2 Press ▲ or ▼ to Utilities and press OK to select.

3 Press ▲ or ▼ to `Radio Info` and press OK to select.

4 Press ▲ or ▼ to `GNSS Info` and press OK to select.

5 Press ▲ or ▼ to the required item and press OK to select.

The display shows the requested GNSS information.

See Turning GNSS On or Off on page 331 for details on GNSS.

5.3.26.21

Viewing Enterprise Wi-Fi Certificate Details

You can view the details of the selected Enterprise Wi-Fi Certificate.

1 Press OK to access the menu.

2 Press ▲ or ▼ to `Utilities`. Press OK to select.

3 Press ▲ or ▼ to `Certificate Menu`. Press OK to select.

✓ appears beside ready certificates.

4 Press ▲ or ▼ to the required certificate.

Press OK to select.

Your radio displays the full details of the certificate.

NOTICE:
For unready certificates, the display shows only Status.

Other Systems

Features that are available to the radio users under this system are available in this chapter.

6.1

Push-To-Talk Button

The Push-to-Talk **(PTT)** button serves two basic purposes:

- While a call is in progress, the **PTT** button allows the radio to transmit to other radios in the call. The microphone is activated when the **PTT** button is pressed.
- While a call is not in progress, the **PTT** button is used to make a new call.

Long press the **PTT** button to talk. Release the **PTT** button to listen.

If the Talk Permit Tone or the PTT Sidetone is enabled, wait until the short alert tone ends before talking.

If the Channel Free Indication feature is enabled on your radio (programmed by your dealer), you hear a short alert tone the moment the target radio (the radio that is receiving your call) releases the **PTT** button, indicating the channel is free for you to respond.

You hear a continuous Talk Prohibit Tone if your call is interrupted. You should release the **PTT** button if you hear a continuous Talk Prohibit Tone.

6.2

Programmable Buttons

Depending on the duration of a button press, your dealer can program the programmable buttons as shortcuts to radio functions.

Short press
Pressing and releasing rapidly.

Long press
Pressing and holding for the programmed duration.

NOTICE:
See Emergency Operation on page 427 for more information on the programmed duration of the **Emergency** button.

6.2.1

Assignable Radio Functions

The following radio functions can be assigned to the programmable buttons.

Audio Ambience
Allows the user to select an environment the radio is operating in.

Audio Profiles
Allows the user to select the preferred audio profile.

Bluetooth® Audio Switch
Toggles audio routing between internal radio speaker and external Bluetooth-enabled accessory.

Bluetooth Connect
Initiates a Bluetooth find-and-connect operation.

Bluetooth Disconnect
Terminates all existing Bluetooth connections between your radio and any Bluetooth-enabled devices.

Bluetooth Discoverable
Enables your radio to enter Bluetooth Discoverable Mode.

Call Alert
Provides direct access to the contacts list for you to select a contact to whom a Call Alert can be sent.

Call Forwarding
Toggles Call Forwarding on or off.

Call Log
Selects the call log list.

Channel Announcement
Plays zone and channel announcement voice messages for the current channel.

Contacts
Provides direct access to the Contacts list.

Emergency
Depending on the programming, initiates or cancels an emergency.

Ext Public Address (PA)
Toggles audio routing between the connected PA loudspeaker amplifier and the internal PA system of the radio.

Indoor Location
Toggles Indoor Location on or off.

Intelligent Audio
Toggles intelligent audio on or off.

Manual Dial
Initiates a Private Call by keying in any subscriber ID.

Manual Site Roam [7]
Starts the manual site search.

Mic AGC
Toggles the internal microphone automatic gain control (AGC) on or off.

Monitor
Monitors a selected channel for activity.

Notifications
Provides direct access to the Notifications list.

Nuisance Channel Delete[7]
Temporarily removes an unwanted channel, except for the Selected Channel, from the scan list. The Selected Channel refers to the selected zone or channel combination of the user from which scan is initiated.

One Touch Access
Directly initiates a predefined Private, Phone or Group Call, a Call Alert, a Quick Text message, or Home Revert.

Option Board Feature
Toggles option board feature(s) on or off for option board-enabled channels.

Permanent Monitor[7]
Monitors a selected channel for all radio traffic until function is disabled.

Phone
Provides direct access to the Phone Contacts list.

Privacy
Toggles privacy on or off.

Public Address (PA)
Toggles the internal PA system of the radio on or off.

Radio Alias and ID
Provides radio alias and ID.

Radio Check
Determines if a radio is active in a system.

Radio Disable
Allows a target radio to be remotely disabled.

Radio Enable
Allows a target radio to be remotely enabled.

Remote Monitor
Turns on the microphone of a target radio without it giving any indicators.

[7] Not applicable in Capacity Plus.

Repeater/Talkaround[7]
Toggles between using a repeater and communicating directly with another radio.

Reset Home Channel
Sets a new home channel.

Silence Home Channel Reminder
Mutes the Home Channel Reminder.

Scan [8]
Toggles scan on or off.

Site Info
Displays the current site name and ID of Capacity Plus-Multi-Site.

Plays site announcement voice messages for the current site when Voice Announcement is enabled.

Site Lock[7]
When toggled on, the radio searches the current site only. When toggled off, the radio searches other sites in addition to the current site.

Telemetry Control
Controls the Output Pin on a local or remote radio.

Text Message
Selects the text message menu.

Transmit Interrupt Remote Dekey
Stops an ongoing interruptible call to free the channel.

Trill Enhancement
Toggles trill enhancement on or off.

Voice Announcement On/Off
Toggles voice announcement on or off.

Voice Operating Transmission (VOX)
Toggles VOX on or off.

Wi-Fi
Toggles Wi-Fi on or off.

Zone Selection
Allows selection from a list of zones.

6.2.2

Assignable Settings or Utility Functions

The following radio settings or utility functions can be assigned to the programmable buttons.

[8] Not applicable in Capacity Plus–Single-Site.

Tones/Alerts
Toggles all tones and alerts on or off.

Backlight
Toggles display backlight on or off.

Channel Up/Down
Depending on the programming, changes channel to previous or next channel.

Display Mode
Toggles the day/night display mode on or off.

Power Level
Toggles transmit power level between high and low.

6.2.3

Accessing Programmed Functions

Follow the procedure to access programmed functions in your radio.

1 Do one of the following:
- Press the programmed button. Proceed to step 3.
- Press OK to access the menu.

2 Press ▲ or ▼ to the menu function, and press OK to select a function or enter a sub-menu.

3 Do one of the following:
- Press ⮌ to return to the previous screen.
- Long press ⮌ to return to the Home screen.

Your radio automatically exits the menu after a period of inactivity and returns to the Home screen.

The Menu Navigation Buttons are also available on a keypad microphone. See Keypad Microphone Buttons on page 42.

6.3

Status Indicators

This chapter explains the status indicators and audio tones used in the radio.

6.3.1

Icons

The Liquid Crystal Display (LCD) of your radio shows the radio status, text entries, and menu entries.

Table 10: Display Icons

The following icons appear on the status bar at the top of the radio display. The icons are arranged left most in order of appearance or usage, and are channel-specific.

	BeiDou Only Available [9] BeiDou Only feature is enabled. The icon stays lit when a position fix is available.
	Bluetooth Connected The Bluetooth feature is enabled. The icon stays lit when a remote Bluetooth device is connected.
	Bluetooth Not Connected The Bluetooth feature is enabled but there is no remote Bluetooth device connected.
	Call Log Radio call log.
	Contact Radio contact is available.
	Emergency Radio is in Emergency mode.
	Flexible Receive List Flexible receive list is enabled.
	GNSS Available GNSS feature is enabled. The icon stays lit when a position fix is available.

[9] Only applicable for XiR M8660i/XiR M8668i/CM7668i.

	GNSS Not Available GNSS feature is enabled but is not receiving data from the satellite.
	High Volume Data Radio is receiving high volume data and channel is busy.
	Indoor Location Available [10] Indoor location status is on and available.
	Indoor Location Unavailable[10] Indoor location status is on but unavailable due to Bluetooth disabled or Beacons Scan suspended by Bluetooth.
	Message Incoming message.
	Monitor Selected channel is being monitored.

	Mute Mode Mute Mode is enabled and speaker is muted.
	Notification Notification List has one or more missed events.
	Option Board The Option Board is enabled. (Option board enabled models only.)
	Option Board Non-Function The Option Board is disabled.
	Over-the-Air Programming Delay Timer Indicates time left before automatic restart of radio.
	Received Signal Strength Indicator (RSSI) The number of bars displayed represents the radio signal strength. Four bars indicate the strongest signal.

[10] Only applicable for models with the latest software and hardware.

	This icon is only displayed while receiving.
	Response Inhibit Response Inhibit is enabled.
	Ring Only Ringing mode is enabled.
	Scan [11] Scan feature is enabled.
	Scan-Priority 1[11] Radio detects activity on channel/ group designated as Priority 1.
	Scan-Priority 2[11] Radio detects activity on channel/ group designated as Priority 2.
	Secure The Privacy feature is enabled.

	Sign In Radio is signed in to the remote server.
	Sign Out Radio is signed out of the remote server.
	Silent Ring Silent ring mode is enabled.
	Site Roaming [12] The site roaming feature is enabled.
	Talkaround[11] In the absence of a repeater, the radio is configured for direct radio to radio communication.
	Tones Disable Tones are turned off.
	Unsecure The Privacy feature is disabled.

[11] Not applicable in Capacity Plus.
[12] Not applicable in Capacity Plus–Single-Site.

	Vote Scan Vote scan feature is enabled.
	Wi-Fi Excellent [13] Wi-Fi signal is excellent.
	Wi-Fi Good[13] Wi-Fi signal is good.
	Wi-Fi Average[13] Wi-Fi signal is average.
	Wi-Fi Poor[13] Wi-Fi signal is poor.
	Wi-Fi Unavailable[13] Wi-Fi signal is unavailable.

Table 11: Advance Menu Icons

The following icons appear beside menu items that offer a choice between two options or as an indication that there is a sub-menu offering two options.

	Checkbox (Checked) Indicates that the option is selected.
	Checkbox (Empty) Indicates that the option is not selected.
	Solid Black Box Indicates that the option selected for the menu item with a sub-menu.

Table 12: Bluetooth Device Icons

The following icons appear next to items in the list of Bluetooth-enabled devices available to indicate the device type.

	Bluetooth Audio Device Bluetooth-enabled audio device, such as a headset.
	Bluetooth Data Device Bluetooth-enabled data device, such as a scanner.

[13] Only applicable for XiR M8668i/CM7668i .

	Bluetooth PTT Device Bluetooth-enabled PTT device, such as a PTT-Only Device (POD).
	Bluetooth Sensor Device[13] Bluetooth-enabled sensor device, such as gas sensor.

Table 13: Call Icons

The following icons appear on the display during a call. These icons also appear in the Contacts list to indicate alias or ID type.

	Bluetooth PC Call Indicates a Bluetooth PC Call in progress. In the Contacts list, it indicates a Bluetooth PC Call alias (name) or ID (number).
	Dispatch Call The Dispatch Call contact type is used to send a text message to a dispatcher PC through a third-party Text Message Server.
	Group Call/All Call Indicates a Group Call or All Call in progress. In the Contacts list, it indicates a group alias (name) or ID (number).
	Private Call Indicates a Private Call in progress. In the Contacts list, it indicates a subscriber alias (name) or ID (number).
	Phone Call as Group/All Call Indicates a Phone Call as Group Call or All Call in progress. In the Contacts list, it indicates a group alias (name) or ID (number).
	Phone Call as Private Call Indicates a Phone Call as Private Call in progress.

	In the Contacts list, it indicates a phone alias (name) or ID (number).

Table 14: Job Tickets Icons

The following icons appear momentarily on the display in the Job Ticket folder.

	All Jobs Indicates all jobs listed.
	New Jobs Indicates new jobs.
	In Progress Jobs are transmitting. This is seen before indication for Job Tickets Send Failed or Sent Succesfully.
	Send Failed Jobs cannot be sent.
	Sent Successfully Jobs have been successfully sent.
	Priority 1 Indicates Priority Level 1 for jobs.
	Priority 2 Indicates Priority Level 2 for jobs.
	Priority 3 Indicates Priority Level 3 for jobs.

Table 15: Mini Notice Icons

The following icons appear momentarily on the display after an action to perform a task is taken.

	Failed Transmission (Negative) Failed action taken.
	Successful Transmission (Positive) Successful action taken.

	Transmission in Progress (Transitional) Transmitting. This is seen before indication for Successful Transmission or Failed Transmission.

Table 16: Sent Items Icons

The following icons appear at the top right corner of the display in the Sent Items folder.

or	**In Progress** The text message to a subscriber alias or ID is pending transmission, followed by waiting for acknowledgement. The text message to a group alias or ID is pending transmission.
or	**Individual or Group Message Read** The text message has been read.
or	**Individual or Group Message Unread** The text message has not been read.
or	**Send Failed** The text message cannot be sent.
or	**Sent Successfully** The text message has been successfully sent.

6.3.2

LED Indicators

LED indicators show the operational status of your radio.

Blinking Red

Radio has failed the self-test upon powering up.

Radio is receiving an emergency transmission.

Radio is transmitting in low battery state.

Radio has moved out of range if Auto-Range Transponder System is configured.

Mute Mode is enabled.

Solid Green

Radio is powering up.

Radio is transmitting.

Radio is sending a Call Alert or an emergency transmission.

Blinking Green

Radio is receiving a call or data.

Radio is retrieving Over-the-Air Programming transmissions.

Radio is detecting activity over the air.

NOTICE:
This activity may or may not affect the programmed channel of the radio due to the nature of the digital protocol.

There is no LED indication when the radio is detecting activity over the air in Capacity Plus.

Double Blinking Green

Radio is receiving a privacy-enabled call or data.

Solid Yellow

Radio is monitoring a conventional channel.

Radio is in Bluetooth Discoverable Mode.

Blinking Yellow

Radio is scanning for activity.

Radio has yet to respond to a Call Alert.

Radio has Flexible Receive List enabled.

All Capacity Plus–Multi-Site channels are busy.

Double Blinking Yellow

Radio has Auto Roaming enabled.

Radio is actively searching for a new site.

Radio has yet to respond to a Group Call Alert.

Radio is locked.

Radio is not connected to the repeater while in Capacity Plus.

All Capacity Plus channels are busy.

6.3.3
Tones

The following are the tones that sound through on the radio speaker.

High Pitched Tone

Low Pitched Tone

6.3.3.1

Indicator Tones

Indicator tones provide you with audible indications of the status after an action to perform a task is taken.

Positive Indicator Tone

Negative Indicator Tone

6.3.3.2

Audio Tones

Audio tones provide you with audible indications of the status, or response to data received on the radio.

Continuous Tone
A monotone sound. Sounds continuously until termination.

Periodic Tone
Sounds periodically depending on the duration set by the radio. Tone starts, stops, and repeats itself.

Repetitive Tone
A single tone that repeats itself until it is terminated by the user.

Momentary Tone
Sounds once for a short duration set by the radio.

6.4

Conventional Analog and Digital Modes

Each channel in your radio can be configured as a conventional analog or conventional digital channel.

1 : Channel Selector Knob

Use the **Channel Rocker** to switch between an analog or a digital channel.

Certain features are unavailable when switching from digital to analog mode. The icons for digital features reflect this change by appearing “grayed out”. The disabled features are hidden in the menu.

Your radio also has features available in both analog and digital modes. The minor differences in the way each feature works do **not** affect the performance of your radio.

NOTICE:
Your radio also switches between digital and analog modes during a dual mode scan. See Scan on page 406 for more information.

6.5

Icon Information

Throughout this publication, the icons described are used to indicate features supported in either the conventional analog or conventional digital mode, or made available with a keypad-enabled microphone.

Indicates a conventional **Analog Mode-Only** feature.

Indicates a conventional **Digital Mode-Only** feature.

For features that are available in **both** conventional analog and digital modes, both icons are **not** shown.

6.6

IP Site Connect

This feature allows your radio to extend conventional communication beyond the reach of a single site by connecting to different available sites by using an Internet Protocol (IP) network. This is a conventional multi-site mode.

When the radio moves out of range from one site and into the range of another, the radio connects to the repeater of the new site to send or receive calls or data transmissions. This is done either automatically or manually depending on your settings.

In an automatic site search, the radio scans through all available sites when the signal from the current site is weak or when the radio is unable to detect any signal from the current site. The radio then locks on to the repeater with the strongest Received Signal Strength Indicator (RSSI) value.

In a manual site search, the radio searches for the next site in the roam list that is currently in range but which may not have the strongest signal and locks on to the repeater.

NOTICE:
Each channel can only have either Scan or Roam enabled, not both at the same time.

Channels with this feature enabled can be added to a particular roam list. The radio searches the channels in the roam list during the automatic roam operation to locate the best site. A roam list supports a maximum of 16 channels, including the selected channel.

NOTICE:
You cannot manually add or delete an entry in the roam list. Contact your dealer for more information.

6.7

Capacity Plus–Single-Site

Capacity Plus–Single-Site is a single-site trunking configuration of the MOTOTRBO radio system, which uses a pool of channels to support hundreds of users and up to 254 Groups. This feature allows your radio to efficiently utilize the available number of programmed channels while in Repeater Mode.

You hear a negative indicator tone if you try to access a feature not applicable to Capacity Plus–Single-Site by using a programmable button press.

Your radio also has features that are available in conventional digital mode, IP Site Connect, and Capacity Plus. However, the minor differences in the way each feature works does not affect the performance of your radio.

Check with your dealer or system administrator for more information on this configuration.

6.8

Capacity Plus–Multi-Site

Capacity Plus–Multi-Site is a multi-channel trunking configuration of the MOTOTRBO radio system, combining

the best of both Capacity Plus and IP Site Connect configurations.

Capacity Plus–Multi-Site allows your radio to extend trunking communication beyond the reach of a single site, by connecting to different available sites which are connected with an IP network. It also provides an increase in capacity by efficiently utilizing the combined available number of programmed channels supported by each of the available sites.

When the radio moves out of range from one site and into the range of another, it connects to the repeater of the new site to send or receive calls/data transmissions. Depending on your settings, this is done automatically or manually.

If the radio is set to do this automatically, it scans through all available sites when the signal from the current site is weak or when the radio is unable to detect any signal from the current site. It then locks on to the repeater with the strongest RSSI value.

In a manual site search, the radio searches for the next site in the roam list that is currently in range (but which may not have the strongest signal) and locks on to it.

Any channel with Capacity Plus–Multi-Site enabled can be added to a particular roam list. The radio searches these channels during the automatic roam operation to locate the best site.

NOTICE:
You cannot manually add or delete an entry to the roam list. Check with your dealer or system administrator for more information.

Similar to Capacity Plus–Single Site, icons of features not applicable to Capacity Plus–Multi-Site are not available in the menu. You hear a negative indicator tone if you try to access a feature not applicable to Capacity Plus–Multi-Site by using a programmable button press.

6.9

Zone and Channel Selections

This chapter explains the operations to select a zone or channel on your radio. A zone is a group of channels.

Your radio supports up to 99 channels and 2 zones, with a maximum of 99 channels per zone.

Each channel can be programmed with different features and/or support different groups of users.

6.9.1

Selecting Zones

Follow the procedure to select the required zone on your radio.

1 Do one of the following:

- Press the programmed **Zone Selection** button. Proceed to step 3.
- Press OK to access the menu.

2 Press ▲ or ▼ to `Zone`. Press OK to select.

The display shows ✓ and the current zone.

3 Press ▲ or ▼ to the required zone. Press OK to select.

The display shows `<Zone> Selected` momentarily and returns to the selected zone screen.

6.9.2

Selecting Zones by Using the Alias Search

Follow the procedure to select the required zone on your radio by using the alias search.

1 Press OK to access the menu.

2 Press ▲ or ▼ to `Zone`. Press OK to select.

The display shows ✓ and the current zone.

3 Enter the first character of the required alias.

The display shows a blinking cursor.

4 Enter the rest of the characters of the required alias.

The alias search is case-insensitive. If there are two or more entries with the same name, the display shows the entry listed first in the list.

The first text line shows the characters you entered. The following text lines show the shortlisted search results.

5 Press OK to select.

The display shows `<Zone> Selected` momentarily and returns to the selected zone screen.

6.9.3

Selecting Channels

Follow the procedure to select the required channel on your radio.

Do one of the following:

- Press the **Scroll Up/Down** button.
- Use the **Volume/Channel Knob**.
- Press the programmed **Channel Up/Down** buttons.

NOTICE:
If **Virtual Channel Stop** is enabled, your radio stops proceeding beyond the first or the last channel, and a tone is heard.

6.10

Calls

This chapter explains the operations to receive, respond to, make, and stop calls.

You can select a subscriber alias or ID, or group alias or ID after you have selected a channel by using one of these features:

Alias Search
This method is used for Group, Private, and All Calls only with a keypad microphone.

Contacts List
This method provides direct access to the Contacts list.

Manual Dial (by using Contacts)
This method is used for Private and Phone Calls only with a keypad microphone.

Programmed Number Keys

This method is used for Group, Private, and All Calls only with a keypad microphone.

NOTICE:
You can only have one alias or ID assigned to a number key, but you can have more than one number key associated to an alias or ID. All the number keys on a keypad microphone can be assigned. See Assigning Entries to Programmable Number Keys on page 411 for more information.

Programmed One Touch Access Button

This method is used for Group, Private, and Phone Calls only.

You can only have one ID assigned to a **One Touch Access** button with a short or long programmable button press. Your radio can have multiple **One Touch Access** buttons programmed.

Programmable Button

This method is used for Phone Calls only.

Volume/Channel Selector Knob

This method manually selects a subscriber alias or ID, or group alias or ID.

The LED lights up solid green while the radio is transmitting and blinks green when the radio is receiving.

NOTICE:
The LED lights up solid green while the radio is transmitting and double blinks green when the radio is receiving a privacy-enabled call.

To unscramble a privacy-enabled call, your radio must have the same Privacy Key, or the same Key Value and Key ID (programmed by your dealer), as the transmitting radio (the radio you are receiving the call from).

See Privacy on page 463 for more information.

6.10.1
Group Calls

Your radio must be configured as part of a group to receive a call from or make a call to the group of users.

6.10.1.1
Making Group Calls

Follow the procedure to make Group Calls on your radio.

1 Do one of the following:

- Select a channel with the active group alias or ID.
- Press the programmed **One Touch Access** button.

2 Press the **PTT** button to make the call.

The green LED lights up. The display shows the **Group Call** icon and the group call alias.

3 Release the **PTT** button to listen.

The green LED lights up when the target radio responds. The display shows the **Group Call** icon, the group alias or ID, and the transmitting radio alias or ID.

4 If the Channel Free Indication feature is enabled, you hear a short alert tone the moment the transmitting radio releases the **PTT** button, indicating the channel is free for you to respond. Press the **PTT** button to respond to the call.

The call ends when there is no voice activity for a predetermined period. The radio returns to the screen you were on prior to initiating the call.

6.10.1.2

Making Group Calls by Using the Contacts List

Follow the procedure to make Group Calls on your radio by using the Contacts list.

1 Press OK to access the menu.

2 Press ▲ or ▼ to Contacts. Press OK to select.

3 Press ▲ or ▼ to the required alias or ID.

Press OK to select.

4 Press the **PTT** button to make the call.

The green LED lights up.

5 Release the **PTT** button to listen.

The green LED blinks when any user in the group responds. The display shows the **Group Call** icon, and alias or ID, and the transmitting radio alias or ID.

6 If the Channel Free Indication feature is enabled, you hear a short alert tone the moment the transmitting radio releases the **PTT** button, indicating the channel is free for you to respond. Press the **PTT** button to respond to the call.

The call ends when there is no voice activity for a predetermined period.

6.10.1.3

Making Group Calls by Using the Programmable Number Key

Follow the procedure to make Group Calls on your radio by using the programmable number key.

1 Long press the programmed number key to the predefined alias or ID when you are on the Home screen.

If a number key is assigned to an entry in a particular mode, this feature is not supported when you long press the number key in another mode.

A negative indicator tone sounds if the number key is not associated to an entry.

2 Press the **PTT** button to make the call.

The green LED lights up.

3 Release the **PTT** button to listen.

The green LED blinks when any user in the group responds.

4 If the Channel Free Indication feature is enabled, you hear a short alert tone the moment the transmitting radio releases the **PTT** button, indicating the channel is free for you to respond. Press the **PTT** button to respond to the call.

The call ends when there is no voice activity for a predetermined period. The radio returns to the screen you were on before initiating the call.

See Assigning Entries to Programmable Number Keys on page 411 for more information.

6.10.1.4

Responding to Group Calls

To receive a call from a group of users, your radio must be configured as part of that group. Follow the procedure to respond to Group Calls on your radio.

When you receive a Group Call:

- The green LED blinks.
- The display shows the **Group Call** icon at the top right corner.
- The first text line shows the caller alias.
- The second text line displays the group call alias.
- Your radio unmutes and the incoming call sounds through the speaker.

1 Do one of the following:

- If the Channel Free Indication feature is enabled, you hear a short alert tone the moment the transmitting radio releases the **PTT** button, indicating the channel is free for you to respond. Press the **PTT** button to respond to the call.
- If the Voice Interrupt feature is enabled, press the **PTT** button to interrupt the audio from the transmitting radio and free the channel for you to respond.

The green LED lights up.

2 Do one of the following:

- Wait for the Talk Permit Tone to end and speak clearly into the microphone if enabled.
- Wait for the **PTT** Sidetone to end and speak clearly into the microphone if enabled.

3 Release the **PTT** button to listen.

The call ends when there is no voice activity for a predetermined period.

If the radio receives a Group Call while not on the Home screen, it remains on its current screen prior to answering the call.

Long press to return to the Home screen to view the caller alias before replying.

6.10.2

Private Calls

A Private Call is a call from an individual radio to another individual radio.

There are two ways to set up a Private Call. The first type sets up the call after performing a radio presence check, while the second type sets up the call immediately. Only one of these types can be programmed to your radio by your dealer.

6.10.2.1

Making Private Calls

Your radio must be programmed to initiate a Private Call. If this feature is not enabled, a negative indicator tone sounds when you initiate the call. Follow the procedure to make Private Calls on your radio.

Use the Text Message or Call Alert features to contact an individual radio. For more information, see Text Messaging on page 152 or Call Alert Operation on page 421.

1 Do one of the following:
   - Select a channel with the active subscriber alias or ID.
   - Press the programmed **One Touch Access** button.

2 Press the **PTT** button to make the call.

   The green LED lights up. The display shows the **Private Call** icon, the subscriber alias, and call status.

3 Wait for the Talk Permit Tone to end and speak clearly into the microphone if enabled.

4 Release the **PTT** button to listen.

   The green LED blinks when the target radio responds.

5 If the Channel Free Indication feature is enabled, you hear a short alert tone the moment the transmitting radio releases the **PTT** button, indicating the channel is free for you to respond. Press the **PTT** button to respond to the call.

   The call ends when there is no voice activity for a predetermined period. A tone sounds. The display shows `Call Ended`.

6.10.2.2

Making Private Calls by Using the Contacts List

1 Press OK to access the menu.

2 Press ▲ or ▼ to `Contacts`. Press OK to select.

3 Press ▲ or ▼ to the required alias or ID.

Press OK to select.

4 Press the **PTT** button to make the call.

The green LED lights up. The display shows the destination alias.

5 Wait for the Talk Permit Tone to end and speak clearly into the microphone if enabled.

6 Release the **PTT** button to listen.

The green LED blinks when the target radio responds. The display shows the transmitting user alias or ID.

7 If the Channel Free Indication feature is enabled, you hear a short alert tone the moment the transmitting radio releases the **PTT** button, indicating the channel is free for you to respond. Press the **PTT** button to respond to the call.

The call ends when there is no voice activity for a predetermined period. A tone sounds. The display shows `Call Ended`.

6.10.2.3

Making Private Calls by Using the Manual Dial

Follow the procedure to make Private Calls on your radio by using the manual dial.

1 Press OK to access the menu.

2 Press ▲ or ▼ to `Contacts`. Press OK to select.

3 Press ▲ or ▼ to `Manual Dial`. Press OK to select.

4 Press ▲ or ▼ to `Radio Number`. Press OK to select.

5 Do one of the following:

- Enter the subscriber ID, and press OK to proceed.
- Edit the previously dialed subscriber ID, and press OK to proceed.

6 Press the **PTT** button to make the call.

The green LED lights up. The display shows the destination alias.

7 Wait for the Talk Permit Tone to end and speak clearly into the microphone if enabled.

8 Release the **PTT** button to listen.

The green LED lights up when the target radio responds. The display shows the transmitting user alias or ID.

9 If the Channel Free Indication feature is enabled, you hear a short alert tone the moment the transmitting radio releases the **PTT** button, indicating the channel is free for you to respond. Press the **PTT** button to respond to the call.

The call ends when there is no voice activity for a predetermined period. A tone sounds. The display shows `Call Ended`.

6.10.2.4

Making Private Calls by Using the Programmable Number Key

Follow the procedure to make Private Calls on your radio by using the programmable number key.

1 Long press the programmed number key to the predefined alias or ID when you are on the Home screen.

If a number key is assigned to an entry in a particular mode, this feature is not supported when you long press the number key in another mode.

A negative indicator tone sounds if the number key is not associated to an entry.

2 Press the **PTT** button to make the call.

The green LED lights up. The display shows the **Private Call** icon at the top right corner. The first text line shows the caller alias. The second text line shows the call status.

3 Release the **PTT** button to listen.

The green LED blinks when the target radio responds. The display shows the destination alias.

4 If the Channel Free Indication feature is enabled, you hear a short alert tone the moment the transmitting radio releases the **PTT** button, indicating the channel is free for you to respond. Press the **PTT** button to respond to the call.

The call ends when there is no voice activity for a predetermined period. A tone sounds. The radio returns to the screen you were on before initiating the call.

See Assigning Entries to Programmable Number Keys on page 411 for more information.

6.10.2.5

Responding to Private Calls

Follow the procedure to respond to Private Calls on your radio.

When you receive a Private Call:

- The green LED blinks.
- Your radio unmutes and the incoming call sounds through the speaker.

1 Do one of the following:

- If the Channel Free Indication feature is enabled, you hear a short alert tone the moment the transmitting radio releases the **PTT** button, indicating the channel is free for you to respond. Press the **PTT** button to respond to the call.
- If the Transmit Interrupt Remote Dekey feature is enabled, press the **PTT** button to stop an

ongoing interruptible call and free the channel for you to respond.

The green LED lights up.

2 Wait for the Talk Permit Tone to end and speak clearly into the microphone if enabled.

3 Release the **PTT** button to listen.

The call ends when there is no voice activity for a predetermined period.

6.10.3

All Calls

An All Call is a call from an individual radio to every radio on the channel. An All Call is used to make important announcements, requiring full attention from the user. The users on the channel cannot respond to an All Call.

6.10.3.1

Receiving All Calls

When you receive an All Call:

- A tone sounds.
- The green LED blinks.
- The display shows the **Group Call** icon at the top right corner.
- The first text line shows the caller alias ID.
- The second text line displays `All Call`.
- Your radio unmutes and the incoming call sounds through the speaker.

The radio returns to the screen before receiving the All Call when the call ends.

An All Call does not wait for a predetermined period before ending.

If the Channel Free Indication feature is enabled, you hear a short alert tone when the transmitting radio releases the **PTT** button, indicating the channel is free for you to use.

You cannot respond to an All Call.

NOTICE:
The radio stops receiving the All Call if you switch to a different channel while receiving the call. You are not able to continue with any menu navigation or editing until the end of an All Call.

6.10.3.2

Making All Calls

Your radio must be programmed for you to make an All Call. Follow the procedure to make All Calls on your radio.

1 Select a channel with the active All Call group alias or ID.

2 Press the **PTT** button to make the call.

The green LED lights up. The display shows the **Group Call** icon and `All Call`.

3 Do one of the following:

- Wait for the Talk Permit Tone to end and speak clearly into the microphone if enabled.
- Wait for the **PTT** Sidetone to end and speak clearly into the microphone if enabled.

Users on the channel cannot respond to an All Call.

6.10.3.3

Making All Calls by Using the Programmable Number Key

Follow the procedure to make All Calls on your radio by using the programmable number key.

1 Long press the programmed number key assigned to the predefined alias or ID when you are on the Home screen.

If a number key is assigned to an entry in a particular mode, this feature is not supported when you long press the number key in another mode.

A negative indicator tone sounds if the number key is not associated to an entry.

2 Press the **PTT** button to make the call.

The green LED lights up.

3 Release the **PTT** button to listen.

The green LED lights up when the target radio responds. You cannot respond to an All Call at the moment.

4 If the Channel Free Indication feature is enabled, you hear a short alert tone the moment the transmitting radio releases the **PTT** button, indicating the channel is free for you to respond. Press the **PTT** button to respond to the call.

The call ends when there is no voice activity for a predetermined period. The radio returns to the screen you were on prior to initiating the call.
For a Private Call, you hear a short tone when the call ends.

See Assigning Entries to Programmable Number Keys on page 411 for more information.

6.10.4

Selective Calls

A Selective Call is a call from an individual radio to another individual radio. It is a Private Call on an analog system.

6.10.4.1

Making Selective Calls

Your radio must be programmed for you to initiate a Selective Call. Follow the procedure to make Selective Calls on your radio.

1 Select a channel with the active subscriber alias or ID.

2 Press the **PTT** button to make the call.

The green LED lights up. The display shows the **Private Call** icon, the subscriber alias, and call status.

3 Do one of the following:

- Wait for the Talk Permit Tone to end and speak clearly into the microphone if enabled.
- Wait for the **PTT** Sidetone to end and speak clearly into the microphone if enabled.

4 Release the **PTT** button to listen.

The green LED lights up when the target radio responds.

5 If the Channel Free Indication feature is enabled, you hear a short alert tone the moment the transmitting radio releases the **PTT** button, indicating the channel is free for you to respond. Press the **PTT** button to respond to the call.

The call ends when there is no voice activity for a predetermined period.

6 The display shows `Call Ended`.

6.10.4.2

Responding to Selective Calls

Follow the procedure to respond to Selective Calls on your radio.

When you receive a Selective Call:

- The green LED blinks.
- The first text line shows the **Private Call** icon and the caller alias or `Selective Call` or `Alert with Call`.
- Your radio unmutes and the incoming call sounds through the speaker.

1 Press the **PTT** button to respond to the call.

The green LED lights up.

2 Wait for the Talk Permit Tone to end and speak clearly into the microphone if enabled.

3 Release the **PTT** button to listen.

The call ends when there is no voice activity for a predetermined period. A tone sounds. The display shows `Call Ended`.

6.10.5

Phone Calls

A Phone Call is a call from an individual radio to a telephone.

If Phone Call capability is not enabled in your radio:

- The display shows `Unavailable`.
- Your radio mutes the call.
- Your radio returns to the previous screen when the call ends.

During the Phone Call, your radio attempts to end the call when:

- You press the **One Touch Access** button with the deaccess code preconfigured.
- You enter the deaccess code as the input for extra digits.

During channel access, access or deaccess code, or extra digits transmission, your radio responds to the **On/Off** , **Volume Control**, and **Channel Selector** buttons or knobs only. A tone sounds for every invalid input.

During channel access, press to dismiss the call attempt. A tone sounds.

NOTICE:
The access or deaccess code cannot be more than 10 characters.

Check with your dealer or system administrator for more information.

6.10.5.1

Making Phone Calls

Follow the procedure to make Phone Calls on your radio.

1 Press the programmed **One Touch Access** button to the predefined alias or ID.

If the entry for the **One Touch Access** button is empty, a negative indicator tone sounds. If the access code is not preconfigured in the Contact List, the display shows `Access Code:`.

2 Enter the access code, and press OK to proceed.

The access or deaccess code cannot be more than 10 characters.

3 Press the **PTT** button to respond to the call. Release the **PTT** button to listen.

4 Enter extra digits with the keypad if requested by the call, and press OK to proceed.

If the call ends while you are entering the extra digits requested by the call, your radio returns to the screen you were on before initiating the call.

The Dual Tone Multi Frequency (DTMF) Tone sounds. Your radio returns to the previous screen.

5 Press to end the call.

6 Do one of the following:

- If the deaccess code was not preconfigured, enter the deaccess code when the display shows `De-Access Code:`, and press OK to proceed. The radio returns to the previous screen.

- Press the programmed **One Touch Access** button.
  If the entry for the **One Touch Access** button is empty, a negative indicator tone sounds.

The DTMF Tone sounds and the display shows `Ending Phone Call`.
If the call ends successfully:

- A tone sounds.
- The display shows `Call Ended`.

If the call fails to end, the radio returns to the Phone Call screen. Repeat the last two steps or wait for the telephone user to end the call.

6.10.5.2

Making Phone Calls by Using the Contacts List

Follow the procedure to make Phone Calls on your radio by using the Contacts list.

1 Press OK to access the menu.

2 Press ▲ or ▼ to `Contacts`. Press OK to select.

The display shows the entries in alphabetical order.

3 Press ▲ or ▼ to the required alias or ID.

Press OK to select.

When you press the **PTT** button while on the Phone Contacts screen:

- The first line of the display shows `Phone Number:`.
- The second line of the display shows a blinking cursor.

If the selected entry is empty:

- A negative indicator tone sounds.
- The display shows `Phone Call Invalid #`.

4 Press ▲ or ▼ to `Call Phone`. Press OK to select.

The display shows `Access Code:` if the access code was not preconfigured.

5 Enter the access code, and press OK to proceed.

The access or deaccess code cannot be more than 10 characters.

The first text line shows `Calling`. The second text line shows the subscriber alias or ID, and the **Phone Call** icon.
If the call is successful:

- The DTMF Tone sounds.
- You hear the dialing tone of the telephone user.
- The first text line shows the subscriber alias or ID, and the **RSSI** icon.
- The second text line shows `Phone Call`, and the **Phone Call** icon.

If the call is unsuccessful:

- A tone sounds.
- The display shows `Phone Call Failed` and then, `Access Code:`.
- Your radio returns to the screen you were on prior to initiating the call if the access code has been preconfigured in the Contacts list.

6 Press the **PTT** button to respond to the call.

The **RSSI** icon disappears.

7 Release the **PTT** button to listen.

8 Enter extra digits with the keypad if requested by the call, and press OK to proceed.

If the call ends while you are entering the extra digits requested by the call, your radio returns to the screen you were on prior to initiating the call.

The DTMF Tone sounds. Your radio returns to the previous screen.

9 Press ↩ to end the call.

10 If the deaccess code was not preconfigured, enter the deaccess code when the display shows `De-Access Code:`, and press OK to proceed.

The radio returns to the previous screen. The DTMF Tone sounds and the display shows `Ending Phone Call`.
If the call ends successfully:

- A tone sounds.
- The display shows `Call Ended`.

If the call fails to end, the radio returns to the Phone Call screen. Repeat step 9 and step 10, or wait for the telephone user to end the call. When you press the **PTT** button while in the Phone Contacts screen, as tone sounds and the display shows `Press OK to Place Phone Call`.

When the telephone user ends the call, a tone sounds and the display shows `Phone Call Ended`.

If the call ends while you are entering the extra digits requested by the Phone Call, your radio returns to the screen you were on prior to initiating the call.

NOTICE:

During the channel access, press to dismiss the call attempt and a tone sounds.

During the call, when you press **One Touch Access** button with the deaccess code preconfigured or enter the deaccess code as the input for extra digits, your radio attempts to end the call.

During channel access and access/ deaccess code or extra digits transmission, your radio responds to **On/Off** button, **Volume Knob**, and **Channel Rocker** only. A tone sounds for every invalid input.

6.10.5.3

Making Phone Calls by Using the Manual Dial

Follow the procedure to make Phone Calls on your radio by using the manual dial.

1 Press OK to access the menu.

2 Press ▲ or ▼ to `Contacts`. Press OK to select.

3 Press ▲ or ▼ to `Manual Dial`. Press OK to select.

4 Press ▲ or ▼ to `Phone Number`. Press OK to select.

The display shows `Number:` and a blinking cursor.

5 Enter the telephone number, and press OK to proceed.

The display shows `Access Code:` and a blinking cursor if the access code was not preconfigured.

6 Enter the access code, and press OK to proceed.

The access or deaccess code cannot be more than 10 characters.

7 The green LED lights up. The display shows the **Phone Call** icon at the top right corner. The first text line shows the subscriber alias. The second text line shows the call status.

If the call is successful:

- The DTMF Tone sounds.
- You hear the dialing tone of the telephone user.
- The first text line shows the subscriber alias.
- The display continues to show the **Phone Call** icon at the top right corner.

If the call is unsuccessful:

- A tone sounds.
- The display shows `Phone Call Failed` and then, `Access Code:`.
- Your radio returns to the screen you were on before initiating the call if the access code has been preconfigured in the Contacts list.

8 Press ⏻ to end the call.

9 Do one of the following:

- If the deaccess code was not preconfigured, enter the deaccess code when the display shows `De-Access Code:`, and press OK to proceed. The radio returns to the previous screen.
- Press the programmed **One Touch Access** button.
  If the entry for the **One Touch Access** button is empty, a negative indicator tone sounds.

The DTMF Tone sounds and the display shows `Ending Phone Call.`
If the call ends successfully:

- A tone sounds.
- The display shows `Call Ended`.

If the call fails to end, the radio returns to the Phone Call screen. Repeat step 8, or wait for the telephone user to end the call.

NOTICE:
When you press **PTT** button while in the Phone Contacts screen, a tone sounds and the display shows `Press OK to Place Phone Call.`

When the telephone user ends the call, a tone sounds and the display shows `Call Ended.`

If the call ends while you are entering the extra digits requested by the Phone Call, your radio returns to the screen you were on before initiating the call.

During the channel access, press to dismiss the call attempt and a tone sounds.

During the call, when you press **One Touch Access** button with the deaccess code preconfigured or enter the deaccess code as the input for extra digits, your radio attempts to end the call.

During channel access and access/deaccess code or extra digits transmission, you radio responds to **On/Off** button, **Volume Knob**,

and **Channel Rocker** only. A tone sounds for every invalid input.

6.10.5.4

Making Group, Private, Phone or All Calls by Using the Alias Search

Follow the procedure to make any calls by using the alias search.

1 Press OK to access the menu.

2 Press ▲ or ▼ to `Contacts`. Press OK to select.

The display shows the entries in alphabetical order.

3 Press ▲ or ▼ to the required subscriber alias or ID. The first line of the display shows `Phone Number:`. The second line of the display shows a blinking cursor. Use the keypad to enter a telephone number.

4 Press OK to select. If the entry selected is empty, a negative indicator tone sounds and the display shows `Phone Call Invalid #`.

5 Press ▲ or ▼ to Call Phone and Press OK to select. If the access code was not preconfigured in the Contacts list, the first line of the display shows `Access Code:`. The second line of the display shows a blinking cursor. Enter the access code and press the OK button to proceed. If successful, the DTMF tone sounds. You hear the dialing tone of the telephone user. The first line of the display shows the subscriber alias or ID, and the RSSI icon. The second line of the display shows `Phone Call` and the Phone Call icon. If unsuccessful, a tone sounds and the display shows `Phone Call Failed`. Your radio returns to the Access Code input screen. If the access code was preconfigured in the Contacts list, the radio returns to the screen you were on prior to initiating the call.

6 Press the **PTT** button to talk and release it to listen. The RSSI icon disappears during transmission.

7 To enter extra digits, if requested by the Phone Call, do one of the following.

- Press any keypad key to begin the input of the extra digits. The first line of the display shows `Extra Digits:`. The second line of the display shows a blinking cursor. Enter the extra digits and press the OK button to proceed. The DTMF tone sounds and the radio returns to the previous screen.
- Press **One Touch Access** button. The DTMF tone sounds. If the entry for the **One Touch Access** button is empty, a negative indicator tone sounds.

8 Press to end the call. If deaccess code was not preconfigured in the Contacts list, the first line of the display shows `De-Access Code:`. The second line of the display shows a blinking cursor. Enter the deaccess code and press OK to proceed. The radio returns to the previous screen. The DTMF tone sounds and the display shows `Ending Phone Call`. If successful, a tone sounds and the display shows Phone Call Ended. Your radio returns to the Phone Call screen. If unsuccessful, your radio returns to the Phone Call screen. When you press the **PTT** button while in the Phone Contacts screen, as tone sounds and the display shows `Press OK to Place Phone Call`. When the telephone user ends the call, a tone sounds and the display shows `Phone Call Ended`. If the call ends while you are entering the extra digits requested by the Phone Call, your radio returns to the screen you were on prior to initiating the call.

NOTICE:

During the channel access, press to dismiss the call attempt and a tone sounds button or to exit alias search. Press OK or to exit alias search. During the call, when you press the **One Touch Access** button with the deaccess code preconfigured or enter the deaccess code as the input for extra digits, your radio attempts to end the call. During channel access and access/ deaccess code or extra digits transmission, you radio responds to On/Off button, Volume Knob, and Channel Rocker only. A tone sounds for every invalid input.

6.10.5.5

Dual Tone Multi Frequency

The Dual Tone Multi Frequency (DTMF) feature allows your radio to operate in a radio system with an interface to the telephone systems.

Disabling all radio tones and alert will automatically turn off the DTMF tone.

6.10.5.5.1

Initiating DTMF Tone

Follow the procedure to initiate a DTMF tone on your radio.

1. Press and hold the **PTT** button.
2. Do one of the following:
   - Enter the desired number to initiate a DTMF tone.
   - Press to initiate a DTMF tone.
   - Press to initiate a DTMF tone.

6.10.5.6

Responding to Phone Calls as Group Calls

Follow the procedure to respond to Phone Calls as Group Calls on your radio.

When you receive a Phone Call as a Group Call:

- The display shows the **Phone Call** icon at the top right corner.
- The display shows the group alias and `Phone Call`.

If Phone Call capability is not enabled on your radio, the first line of the display shows `Unavailable` and your radio mutes the call. Your radio returns to the previous screen when the call ends.

1. Press the **PTT** button to respond to the call. Release the **PTT** button to listen.
2. Press to end the call.

   The display shows `Ending Phone Call`.
   If the call ends successfully:
   - A tone sounds.
   - The display shows `Call Ended`.

If the call fails to end, the radio returns to the Phone Call screen. Repeat this step or wait for the telephone user to end the call.

6.10.5.7

Responding to Phone Calls as All Calls

When you receive a Phone Call as an All Call, you can respond to or end the call, only if an All Call type is assigned to the channel. Follow the procedure to respond to Phone Calls as All Calls on your radio.

When you receive a Phone Call as an All Call:

- The display shows the **Phone Call** icon at the top right corner.
- The display shows `All Call` and `Phone Call`.

If Phone Call capability is not enabled on your radio, the first line of the display shows `Unavailable` and your radio mutes the call.

Your radio returns to the previous screen when the call ends.

1. Press the **PTT** button to respond to the call.
2. Release the **PTT** button to listen.
3. Press to end the call.

   The display shows `Ending Phone Call`.
   If the call ends successfully:

   - A tone sounds.
   - The display shows `All Call` and `Call Ended`.

   If the call fails to end, the radio returns to the Phone Call screen. Repeat step 3 or wait for the telephone user to end the call.

6.10.5.8

Responding to Phone Calls as Private Calls

Follow the procedure to respond to Phone Calls as Private Calls on your radio.

When you receive a Phone Call as a Private Call:

- The display shows the **Phone Call** icon at the top right corner.
- The display shows the caller alias or `Phone Call`.

If Phone Call capability is not enabled on your radio, the first line of the display shows `Unavailable` and your radio mutes the call. Your radio returns to the previous screen when the call ends.

1 Press the **PTT** button to respond to the call. Release the **PTT** button to listen.

2 Press to end the call.

The display shows `Ending Phone Call`.
If the call ends successfully:

- A tone sounds.
- The display shows `Call Ended`.

If the call fails to end, the radio returns to the Phone Call screen. Repeat this step or wait for the telephone user to end the call.

6.10.6

Initiating Transmit Interrupt

An ongoing call is interrupted, when you perform the following actions:

- Press the **Voice PTT** button.
- Press the **Emergency** button.
- Perform data transmission.
- Press the programmed **TX Interrupt Remote Dekey** button.

The recipient radio displays `Call Interrupted`.

6.10.7

Talkaround

This feature allows you to continue communicating when your repeater is non-operational, or when your radio is out of range from the repeater but within the talk range of other radios.

The talkaround setting is retained even after powering down.

NOTICE:
This feature is not applicable in Capacity Plus–Single-Site, Capacity Plus–Multi-Site, and Citizens Band channels that are in the same frequency.

6.10.7.1

Toggling Between Repeater and Talkaround Modes

Follow the procedure to toggle between Repeater and Talkaround modes on your radio.

1. Do one of the following:
   - Press the programmed **Repeater/Talkaround** button. Skip the following steps.
   - Press OK to access the menu.
2. Press ▲ or ▼ to `Utilities`. Press OK to select.
3. Press ▲ or ▼ to `Radio Settings`. Press OK to select.
4. Press ▲ or ▼ to `Talkaround`. Press OK to select.

   If enabled, ✓ appears beside `Enabled`.

   If disabled, ✓ disappears beside `Enabled`.

   The screen automatically returns to the previous screen.

6.10.8

Broadcast Voice Calls

A Broadcast Voice Call is a one-way voice call from any user to an entire talkgroup.

The Broadcast Voice Call feature allows only the call initiating user to transmit to the talkgroup, while the recipients of the call cannot respond (no Call Hang Time).

Your radio must be programmed to allow you to use this feature. Check with your dealer or system administrator for more information.

6.10.8.1

Making Broadcast Voice Calls

Program your radio to make Broadcast Voice Calls.

1 Select a channel with the active group alias or ID.

2 Press the **PTT** button to make the call.

The green LED lights up. The display shows `Broadcast Call`, the **Group Call** icon and alias.

3 Do one of the following:

- Wait for the Talk Permit Tone to end and speak clearly into the microphone if enabled.
- Wait for the **PTT** Sidetone to end and speak clearly into the microphone if enabled.

NOTICE:
Users on the channel cannot respond to Broadcast Voice Calls.

The radio returns to the previous menu after the call ends.

6.10.8.2

Making Broadcast Voice Calls by Using the Programmable Number Key

Follow the procedure to make Broadcast Voice Call on your radio by using the programmable number key.

1 On the **Home** screen, long press the programmed number key assigned to the predefined alias or ID.

If the number key is assigned to an entry in a particular mode, this feature is not supported when you long press the number key in another mode.

If the number key is not associated to an entry, a negative indicator tone sounds

2 Press the **PTT** button to make the call.

The green LED lights up.

See Assigning Entries to Programmable Number Keys on page 411 for more information.

6.10.8.3

Making Broadcast Voice Calls by Using the Alias Search

1 Press OK to access the menu.

2 Press ▲ or ▼ to `Contacts`. Press OK to select.

The display shows the entries in alphabetical order.

3 Press ▲ or ▼ to the required subscriber alias or ID.

The first line of the display shows `Phone Number:`. The second line of the display shows a blinking cursor.

4 Use the keypad to enter a telephone number.

5 Press OK to select. If the selected entry is empty, a negative indicator tone sounds and the display shows `Phone Call Invalid #`

6 Press ▲ or ▼ to Call Phone and Press OK to select. If the access code was not preconfigured in the Contacts list, the first line of the display shows `Access Code:`. The second line of the display shows a blinking cursor. Enter the access code and press the OK button to proceed. If successful, the DTMF tone sounds. You hear the dialing tone of the telephone user. The first line of the display shows the subscriber alias or ID, and the RSSI icon. The second line of the display shows `Phone Call` and the Phone Call icon. If unsuccessful, a tone sounds and the display shows `Phone Call Failed`. Your radio returns to the Access Code input screen. If the access code was preconfigured in the Contacts list, the radio returns to the screen you were on prior to initiating the call.

7 Press the **PTT** button to talk and release it to listen. The RSSI icon disappears during transmission.

8 To enter extra digits, if requested by the Phone Call, do one of the following.

- Press any keypad key to begin the input of the extra digits. The first line of the display shows `Extra Digits:`. The second line of the display shows a blinking cursor. Enter the extra digits and press the OK button to proceed. The DTMF

tone sounds and the radio returns to the previous screen.

- Press **One Touch Access** button. The DTMF tone sounds. If the entry for the **One Touch Access** button is empty, a negative indicator tone sounds.

9 Press to end the call. If deaccess code was not preconfigured in the Contacts list, the first line of the display shows `De-Access Code:`. The second line of the display shows a blinking cursor. Enter the deaccess code and press OK to proceed. The radio returns to the previous screen. The DTMF tone sounds and the display shows `Ending Phone Call`. If successful, a tone sounds and the display shows Phone Call Ended. Your radio returns to the Phone Call screen. If unsuccessful, your radio returns to the Phone Call screen. When you press the **PTT** button while in the Phone Contacts screen, as tone sounds and the display shows `Press OK to Place Phone Call`. When the telephone user ends the call, a tone sounds and the display shows `Phone Call Ended`. If the call ends while you are entering the extra digits requested by the Phone Call, your radio returns to the screen you were on prior to initiating the call.

NOTICE:

During the channel access, press to dismiss the call attempt and a tone sounds button or to exit alias search. Press OK button or to exit alias search. During the call, when you press One Touch Access button with the deaccess code preconfigured or enter the deaccess code as the input for extra digits, your radio attempts to end the call. During channel access and access/deaccess code or extra digits transmission, you radio responds to On/Off button, Volume Knob, and Channel Rocker only. A tone sounds for every invalid input.

6.10.8.4
Receiving Broadcast Voice Calls

When you receive a Broadcast Voice Call:

- A tone sounds.
- The green LED blinks.

- The display shows the **Group Call** icon at the top right corner.
- The first text line shows the caller alias ID.
- The second text line displays `Broadcast Call`.
- Your radio unmutes and the incoming call sounds through the speaker.

When the call ends, the radio returns to the previous screen.

A Broadcast Voice Call does not wait for a predetermined period before ending.

You cannot respond to a Broadcast Voice Call.

NOTICE:
The radio stops receiving the Broadcast Voice Call if you switch to a different channel while receiving the call. You cannot continue with any menu navigation or editing until the end of the Broadcast Voice Call.

6.10.9
Unaddressed Calls

An Unaddressed Call is a group call to one of the 16 predefined group IDs.

This feature is configured using CPS-RM. A contact for one of the predefined IDs is required to initiate and/or receive an Unaddressed Call. Check with your dealer or system administrator for more information.

6.10.9.1
Making Unaddressed Calls

1. Select a channel with the active group alias or ID.
2. Press the **PTT** button to make the call.

   The green LED lights up.The text line shows `Unaddress Call`, the **Group Call** icon and alias.
3. Do one of the following:
   - Wait for the Talk Permit Tone to end and speak clearly into the microphone if enabled.
   - Wait for the **PTT** Sidetone to end and speak clearly into the microphone if enabled.
4. Release the **PTT** button to listen.

   The green LED lights up when the target radio responds. A momentary tone sounds. The display

shows `Unaddress Call`, the **Group Call** icon, and alias or ID, and the transmitting radio alias or ID.

5 If the Channel Free Indication feature is enabled, you hear a short alert tone the moment the transmitting radio releases the **PTT** button, indicating that the channel is free for you to respond. Press the **PTT** button to respond to the call.

The call ends when there is no voice activity for a predetermined period.

The call initiator can press to end a Group Call.

6.10.9.2

Responding to Unaddressed Calls

When you receive an Unaddressed Call:

- The green LED blinks.
- A momentary tone sounds.
- The text line shows `Unaddress Call`, the caller alias, and the group call alias.
- Your radio unmutes and the incoming call sounds through the speaker.

1 Do one of the following:

- If the Channel Free Indication feature is enabled, you hear a short alert tone the moment the transmitting radio releases the **PTT** button, indicating the channel is free for you to respond. Press the **PTT** button to respond to the call.
- If the Voice Interrupt feature is enabled, press the **PTT** button to interrupt the audio from the transmitting radio and free the channel for you to respond.

The green LED lights up.

2 Do one of the following:

- Wait for the Talk Permit Tone to end and speak clearly into the microphone if enabled.
- Wait for the **PTT** Sidetone to end and speak clearly into the microphone if enabled.

3 Release the **PTT** button to listen.

The call ends when there is no voice activity for a predetermined period.

6.10.10

Open Voice Channel Mode (OVCM)

An Open Voice Channel Mode (OVCM) allows a radio that is not preconfigured to work in a particular system to both receive and transmit during a group or individual call.

The OVCM group call also supports broadcast calls. Program your radio to use this feature. Check with your dealer or system administrator for more information.

6.10.10.1

Making OVCM Calls

Your radio must be programmed for you to make an OVCM Call. Follow the procedure to make OVCM Calls on your radio.

1 Press the **PTT** button to make the call.

The green LED lights up.

The text line shows the call type icon, OVCM and alias. indicating that the radio has entered OVCM State.

2 Do one of the following:

- Wait for the Talk Permit Tone to end and speak clearly into the microphone if enabled.
- Wait for the **PTT** Sidetone to end and speak clearly into the microphone if enabled.

6.10.10.2

Responding to OVCM Calls

When you receive an OVCM Call:

- The green LED blinks.
- The text line shows the call type icon, OVCM, and alias.
- Your radio unmutes and the incoming call sounds through the speaker.

1 Do one of the following:

- If the Channel Free Indication feature is enabled, you hear a short alert tone the moment the transmitting radio releases the **PTT** button,

indicating the channel is free for you to respond. Press the **PTT** button to respond to the call.

- If the Voice Interrupt feature is enabled, press the **PTT** button to interrupt the audio from the transmitting radio and free the channel for you to respond.

The green LED lights up.

2 Do one of the following:

- Wait for the Talk Permit Tone to end and speak clearly into the microphone if enabled.
- Wait for the **PTT** Sidetone to end and speak clearly into the microphone if enabled.

3 Release the **PTT** button to listen.

The call ends when there is no voice activity for a predetermined period.

6.11

Advanced Features

This chapter explains the operations of the features available in your radio.

Your dealer or system administrator may have customized your radio for your specific needs. Check with your dealer or system administrator for more information.

6.11.1

Home Channel Reminder

This feature provides a reminder when the radio is not set to the home channel for a period of time.

If this feature is enabled through CPS, when your radio is not set to the home channel for a period of time, the following occurs periodically:

- The Home Channel Reminder tone and announcement sound.
- The first line of the display shows `Non`.
- The second line shows `Home Channel`.

You can respond to the reminder by performing one of the following actions:

- Return to the home channel.
- Mute the reminder temporarily using the programmable button.
- Set a new home channel using the programmable button.

6.11.1.1

Muting the Home Channel Reminder

When the Home Channel Reminder sounds, you can temporarily mute the reminder.

Press the programmed **Silence Home Channel Reminder** button.

The display shows `HCR Silenced`.

6.11.1.2

Setting New Home Channels

When the Home Channel Reminder occurs, you can set a new home channel.

1 Do one of the following:

- Press the **Reset Home Channel** programmable button to set the current channel as the new Home Channel. Skip the following steps.
  The first line of the display shows the channel alias and the second line shows `New Home Ch`.
- Press OK to access the menu.

2 Press ▲ or ▼ to `Utilities`. Press OK to select.

3 Press ▲ or ▼ to `Radio Settings`. Press OK to select.

4 Press ▲ or ▼ to `Home Channel`. Press OK to select.

5 Press ▲ or ▼ to the desired new home channel alias. Press OK to select.

The display shows ✓ beside the selected home channel alias.

6.11.2

Radio Check

This feature allows you to determine if another radio is active in a system without disturbing the radio user. No audible or visual notification is shown on the target radio. This feature is only applicable for subscriber aliases or IDs.

Your radio must be programmed to allow you to use this feature.

6.11.2.1

Sending Radio Checks

Follow the procedure to send radio checks on your radio.

1 Press the programmed **Radio Check** button.

2 Press ▲ or ▼ to the required alias or ID.

Press OK to select.

The display shows a transitional mini notice, indicating the request is in progress.The green LED lights up.

Wait for acknowledgment.

If you press OK when the radio is waiting for acknowledgment, a tone sounds, the radio terminates all retries, and exits Radio Check mode.

If successful:

- A positive indicator tone sounds.
- The display shows a positive mini notice.

If unsuccessful:

- A negative indicator tone sounds.
- The display shows a negative mini notice.

The radio returns to the subscriber alias or ID screen.

6.11.2.2

Sending Radio Checks by Using the Manual Dial

Follow the procedure to send radio checks on your radio by using the manual dial.

1 Press OK to access the menu.

2 Press ▲ or ▼ to `Contacts`. Press OK to select.

3 Press ▲ or ▼ to `Manual Dial`. Press OK to select.

4 Press ▲ or ▼ to `Radio Number`. Press OK to select.

5 Do one of the following:

- Enter the subscriber alias or ID, and press OK to proceed.
- Edit the previously dialed ID, and press OK to proceed.

6 Press ▲ or ▼ to `Radio Check`. Press OK to select.

The display shows a transitional mini notice, indicating the request is in progress. The green LED lights up.

7 Wait for acknowledgment.

If you press ⏻ when the radio is waiting for acknowledgement, a tone sounds, the radio terminates all retries, and exits Radio Check mode.

If successful:

- A positive indicator tone sounds.
- The display shows a positive mini notice.

If unsuccessful:

- A negative indicator tone sounds.
- The display shows a negative mini notice.

The radio returns to the subscriber alias or ID screen.

6.11.3
Remote Monitor

This feature is used to turn on the microphone of a target radio with a subscriber alias or ID. You can use this feature to remotely monitor any audible activity surrounding the target radio.

There are two types of Remote Monitor:

- Remote Monitor without Authentication
- Remote Monitor with Authentication.

Authenticated Remote Monitor is a purchasable feature. In Authenticated Remote Monitor, verification is required when your radio turns on the microphone of a target radio.

When your radio initiates this feature on a target radio with User Authentication, a passphrase is required. The passphrase is preprogrammed into the target radio through CPS.

Both your radio and the target radio must be programmed to allow you to use this feature.

This feature stops after a programmed duration or when there is any user operation on the target radio.

6.11.3.1
Initiating Remote Monitor

Follow the procedure to initiate Remote Monitor on your radio.

1 Press the programmed **Remote Monitor** button.

2 Press ▲ or ▼ to the required alias or ID.

3 Press OK to select. One of the following scenarios occurs:

- The display shows a transitional mini notice, indicating the request is in progress. The green LED lights up.
- A passphrase screen appears.

  Enter the passphrase. Press OK to proceed.

  - If the passphrase is correct, the display shows a transitional mini notice, indicating the request is in progress. The green LED lights up.
  - If the passphrase is incorrect, the display shows a negative mini notice, and returns to the previous screen.

4 Wait for acknowledgment.

If successful:

- A positive indicator tone sounds.
- The display shows a positive mini notice.
- The audio from the monitored radio starts playing for a programmed duration, and the display shows `Rem. Monitor`. Once the timer expires, an alert tone sounds, and the LED turns off.

If unsuccessful:

- A negative indicator tone sounds.
- The display shows a negative mini notice.

6.11.3.2

Initiating Remote Monitor by Using the Contacts List

Follow the procedure to initiate Remote Monitor on your radio by using the Contacts list.

1 Press OK to access the menu.

2 Press ▲ or ▼ to `Contacts`. Press OK to select.

3 Press ▲ or ▼ to the required alias or ID.

Press OK to select.

4 Press ▲ or ▼ to `Remote Mon.`.

5 Press OK to select. One of the following scenarios occurs:

- The display shows a transitional mini notice, indicating the request is in progress. The green LED lights up.
- A passphrase screen appears.

  Enter the passphrase. Press OK to proceed.

  - If the passphrase is correct, the display shows a transitional mini notice, indicating the request is in progress. The green LED lights up.
  - If the passphrase is incorrect, the display shows a negative mini notice, and returns to the previous screen.

6 Wait for acknowledgment.

If successful:

- A positive indicator tone sounds.
- The display shows a positive mini notice.
- The audio from the monitored radio starts playing for a programmed duration, and the display shows `Rem. Monitor`. Once the timer expires, an alert tone sounds, and the LED turns off.

If unsuccessful:

- A negative indicator tone sounds.
- The display shows a negative mini notice.

6.11.3.3

Initiating Remote Monitor by Using the Manual Dial

Follow the procedure to initiate Remote Monitor on your radio by using the manual dial.

1 Press OK to access the menu.

2 Press ▲ or ▼ to Contacts. Press OK to select.

3 Press ▲ or ▼ to Manual Dial. Press OK to select.

4 Press ▲ or ▼ to Radio Number. Press OK to select.

5 Do one of the following:

- Enter the subscriber alias or ID, and press OK to proceed.
- Edit the previously dialed ID, and press OK to proceed.

6 Press ▲ or ▼ to Remote Mon..

7 Press OK to select. One of the following scenarios occurs:

- The display shows a transitional mini notice, indicating the request is in progress. The green LED lights up.
- A passphrase screen appears.

  Enter the passphrase. Press OK to proceed.

  - If the passphrase is correct, the display shows a transitional mini notice, indicating the request is in progress. The green LED lights up.
  - If the passphrase is incorrect, the display shows a negative mini notice, and returns to the previous screen.

8 Wait for acknowledgment.

If successful:

- A positive indicator tone sounds.
- The display shows a positive mini notice.
- The audio from the monitored radio starts playing for a programmed duration, and the display shows `Rem. Monitor`. Once the timer expires, an alert tone sounds, and the LED turns off.

If unsuccessful:

- A negative indicator tone sounds.
- The display shows a negative mini notice.

6.11.4

Scan Lists

Scan lists are created and assigned to individual channels or groups. Your radio scans for voice activity by cycling through the channel or group sequence specified in the scan list for the current channel or group.

Your radio can support up to 250 scan lists, with a maximum of 16 members in a list.

Each scan list supports a mixture of both analog and digital entries.

You can add, delete, or prioritize channels by editing a scan list.

You can attach a new scan list to your radio by using Front Panel Programming. See Front Panel Configuration on page 193 for more information.

The **Priority** icon appears on the left of the member alias, if set, to indicate whether the member is on a Priority 1 or Priority 2 channel list. You cannot have multiple Priority 1 or Priority 2 channels in a scan list. There is no **Priority** icon if priority is set to **None**.

NOTICE:
This feature is not applicable in Capacity Plus.

6.11.4.1

Viewing Entries in the Scan List

Follow the procedure to view the entries in the Scan list on your radio.

1. Press OK to access the menu.
2. Press ▲ or ▼ to `Scan`. Press OK to select.

3 Press ▲ or ▼ to Scan List. Press OK to select.

4 Press ▲ or ▼ to view each member on the list.

6.11.4.2

Viewing Entries in the Scan List by Using the Alias Search

Follow the procedure to view entries in the Scan list on your radio by using the alias search.

1 Press OK to access the menu.

2 Press ▲ or ▼ to Scan. Press OK to select.

3 Press ▲ or ▼ to Scan List. Press OK to select.

4 Enter the first character of the required alias.

The display shows a blinking cursor.

5 Enter the rest of the characters of the required alias.

The alias search is case-insensitive. If there are two or more entries with the same name, the display shows the entry listed first in the list.

The first text line shows the characters you entered. The following text lines show the shortlisted search results.

6.11.4.3

Adding New Entries to the Scan List

Follow the procedure to add new entries to the Scan list on your radio.

1 Press OK to access the menu.

2 Press ▲ or ▼ to Scan. Press OK to select.

3 Press ▲ or ▼ to Scan List. Press OK to select.

4 Press ▲ or ▼ to Add Member. Press OK to select.

5 Press ▲ or ▼ to the required alias or ID.

Press OK to select.

6 Press ▲ or ▼ to the required priority level.

Press OK to select.

The display shows a positive mini notice and then, Add Another?.

7 Do one of the following:

- Press ▲ or ▼ to Yes to add another entry.

  Press OK to select. Repeat step 5 and step 6.

- Press ▲ or ▼ to No to save the current list.

  Press OK to select.

6.11.4.4

Adding New Entries to the Scan List by Using the Alias Search

Follow the procedure to add new entries to the Scan list on your radio by using the alias search.

1 Press OK to access the menu.

2 Press ▲ or ▼ to Scan. Press OK to select.

3 Press ▲ or ▼ to Scan List. Press OK to select.

4 Press ▲ or ▼ to Add Member. Press OK to select.

5 Enter the first character of the required alias.

The display shows a blinking cursor.

6 Enter the rest of the characters of the required alias.

The alias search is case-insensitive. If there are two or more entries with the same name, the display shows the entry listed first in the list.

The first text line shows the characters you entered. The following text lines show the shortlisted search results.

7 Press OK to select.

8 Press ▲ or ▼ to the required priority level.

Press OK to select.

The display shows a positive mini notice and then, `Add Another?`.

9 Do one of the following:

- Press ▲ or ▼ to `Yes` to add another entry.

  Press OK to select. Repeat Step step 5 to Step step 8.

- Press ▲ or ▼ to `No` to save the current list.

  Press OK to select.

6.11.4.5

Deleting Entries from the Scan List

Follow the procedure to delete entries from the Scan list.

1 Press OK to access the menu.

2 Press ▲ or ▼ to `Scan`. Press OK to select.

3 Press ▲ or ▼ to `Scan List`. Press OK to select.

4 Press ▲ or ▼ to the required alias or ID.

Press OK to select.

5 Press ▲ or ▼ to Delete. Press OK to select.

The display shows Delete Entry?.

6 Do one of the following:

- Press ▲ or ▼ to Yes to delete the entry.

  Press OK to select.
  The display shows a positive mini notice.

- Press ▲ or ▼ to No to return to the previous screen. Press OK to select.

7 Repeat step 4 to step 6 to delete other entries.

8 Long press ⏎ to return to the Home screen after deleting all required aliases or IDs.

6.11.4.6

Setting Priority for Entries in the Scan List

Follow the procedure to set priorities for entries in the Scan list on your radio.

1 Press OK to access the menu.

2 Press ▲ or ▼ to Scan. Press OK to select.

3 Press ▲ or ▼ to Scan List. Press OK to select.

4 Press ▲ or ▼ to the required alias or ID.

Press OK to select.

5 Press ▲ or ▼ to Edit Priority. Press OK to select.

6 Press ▲ or ▼ to the required priority level.

Press OK to select.

The display shows a positive mini notice before returning to the previous screen. The **Priority** icon appears on the left of the member alias.

6.11.5

Scan

Your radio cycles through the programmed scan list for the current channel looking for voice activity when you start a scan.

NOTICE:
This feature is not applicable in Capacity Plus.

During a dual-mode scan, if you are on a digital channel, and your radio locks onto an analog channel, it automatically switches from digital mode to analog mode for the duration of the call. This is also true for the reverse.

There are two ways of initiating scan:

Main Channel Scan (Manual)

Your radio scans all the channels or groups in your scan list. On entering scan, your radio may, depending on the settings, automatically start on the last scanned active channel or group, or on the channel where scan was initiated.

Auto Scan (Automatic)

Your radio automatically starts scanning when you select a channel or group that has Auto Scan enabled.

NOTICE:
When you configure **Receive Group Message In Scan**, your radio is able to receive group messages from non-home channels. Your radio is able to reply the group messages on home channel but is not able to reply on non-home channels. Check with your dealer or system administrator for more information.

6.11.5.1

Turning Scan On or Off

Follow the procedure to turn scan on or off on your radio.

1 Press OK to access the menu.

2 Press ▲ or ▼ to Scan. Press OK to select.

3 Press ▲ or ▼ to `Scan State`. Press OK to select.

4 Press ▲ or ▼ to the required scan state and press OK to select.

If scan is enabled:

- The display shows `Scan On` and **Scan** icon.
- The yellow LED blinks.

If scan is disabled:

- The display shows `Scan Off`.
- The **Scan** icon disappears.
- The LED turns off.

6.11.5.2

Responding to Transmissions During Scanning

During scanning, your radio stops on a channel or group where activity is detected. The radio stays on that channel for a programmed duration known as hang time. Follow the procedure to respond to transmissions during scanning.

1 If the Channel Free Indication feature is enabled, you hear a short alert tone the moment the transmitting radio releases the **PTT** button, indicating the channel is free for you to respond. Press the **PTT** button during hang time.

The green LED lights up.

2 Release the **PTT** button to listen.

The radio returns to scanning other channels or groups if you do not respond within the hang time.

6.11.5.3

Deleting Nuisance Channels

If a channel continually generates unwanted calls or noise, (termed a "nuisance" channel), you can temporarily remove the unwanted channel from the scan list. This capability does not apply to the channel designated as the Selected Channel. Follow the procedure to delete nuisance channels on your radio.

1 When your radio locks on to an unwanted or nuisance channel, press the programmed **Nuisance Channel Delete** button until you hear a tone.

2 Release the programmed **Nuisance Channel Delete** button.

The nuisance channel is deleted.

6.11.5.4

Restoring Nuisance Channels

Follow the procedure to restore nuisance channels on your radio.

Do one of the following:

- Turn the radio off and then power it on again.
- Stop and restart a scan using the programmed **Scan** button or menu.
- Change the channel using the **Channel Up/ Down** button.

6.11.6

Vote Scan

Vote Scan provides you with wide area coverage in areas where there are multiple base stations transmitting identical information on different analog channels.

Your radio scans analog channels of multiple base stations and performs a voting process to select the strongest received signal. Once that is established, your radio receives transmissions from that base station.

During a vote scan, the yellow LED blinks and the display shows the **Vote Scan** icon.

To respond to a transmission during a vote scan, see Responding to Transmissions During Scanning on page 407.

6.11.7

Contacts Settings

Contacts provides address book capabilities on your radio. Each entry corresponds to an alias or ID that you use to initiate a call. The entries are alphabetically sorted.

Each entry, depending on context, associates with the different call types: Group Call, Private Call, All Call, PC Call, or Dispatch Call.

PC Call and Dispatch Call are data-related. They are only available with the applications. Refer to the data applications documentation for further details.

Additionally, Contacts menu allows you to assign each entry to a programmable number key or more on a keypad microphone. If an entry is assigned to a number key, your radio can perform a quick dial on the entry.

NOTICE:
You see a checkmark before each number key that is assigned to an entry. If the checkmark is before `Empty`, you have not assign a number key to the entry.

Each entry within Contacts displays the following information:

- Call Type
- Call Alias
- Call ID

NOTICE:
If the Privacy feature is enabled on a channel, you can make privacy-enabled Group Calls, Private Calls, and All Calls on that channel. Only target radios with the same Privacy Key, or the same Key Value and Key ID as your radio will be able to decrypt the transmission.

6.11.7.1

Making Group Calls by Using the Contacts List

Follow the procedure to make Group Calls on your radio by using the Contacts list.

1. Press OK to access the menu.
2. Press ▲ or ▼ to `Contacts`. Press OK to select.
3. Press ▲ or ▼ to the required alias or ID.

   Press OK to select.

4 Press the **PTT** button to make the call.

The green LED lights up.

5 Release the **PTT** button to listen.

The green LED blinks when any user in the group responds. The display shows the **Group Call** icon, and alias or ID, and the transmitting radio alias or ID.

6 If the Channel Free Indication feature is enabled, you hear a short alert tone the moment the transmitting radio releases the **PTT** button, indicating the channel is free for you to respond. Press the **PTT** button to respond to the call.

The call ends when there is no voice activity for a predetermined period.

6.11.7.2

Making Private Calls by Using the Contacts List

1 Press OK to access the menu.

2 Press ▲ or ▼ to Contacts. Press OK to select.

3 Press ▲ or ▼ to the required alias or ID.

Press OK to select.

4 Press the **PTT** button to make the call.

The green LED lights up. The display shows the destination alias.

5 Wait for the Talk Permit Tone to end and speak clearly into the microphone if enabled.

6 Release the **PTT** button to listen.

The green LED blinks when the target radio responds. The display shows the transmitting user alias or ID.

7 If the Channel Free Indication feature is enabled, you hear a short alert tone the moment the transmitting radio releases the **PTT** button, indicating the channel is free for you to respond. Press the **PTT** button to respond to the call.

The call ends when there is no voice activity for a predetermined period. A tone sounds. The display shows `Call Ended`.

6.11.7.3

Assigning Entries to Programmable Number Keys

1 Press OK to access the menu.

2 Press ▲ or ▼ to `Contacts`. Press OK to select.

3 Press ▲ or ▼ to the required alias or ID.

Press OK to select.

4 Press ▲ or ▼ to `Program Key`. Press OK to select.

5 Do one of the following:

- If the desired number key has not been assigned to an entry, press ▲ or ▼ to the desired number key. Press OK to select.
- If the desired number key has been assigned to an entry, the display shows `The Key is Already Assigned` and then, the first text line shows `Overwrite?`. Do one of the following:

  Press ▲ or ▼ to `Yes`. Press OK to select.

  The radio sounds a positive indicator tone and the display shows `Contact Saved` and a positive mini notice.

  Press ▲ or ▼ to `No` to return to the previous step.

Each entry can be associated to different number keys. You see a ✓ before each number key that is assigned to an entry. If the ✓ is before `Empty`, that number key is not assigned.

If a number key is assigned to an entry in a particular mode, this feature is not supported when you long press the number key in another mode.

The screen automatically returns to the previous menu.

6.11.7.4

Removing Associations Between Entries and Programmable Number Keys

1 Do one of the following:

- Long press the programmed number key to the required alias or ID. Proceed to step 4.
- Press OK to access the menu.

2 Press ▲ or ▼ to `Contacts`. Press OK to select.

3 Press ▲ or ▼ to the required alias or ID.

Press OK to select.

4 Press ▲ or ▼ to `Program Key`. Press OK to select.

5 Press ▲ or ▼ to `Empty`. Press OK to select.

The first text line shows `Clear from all keys`.

6 Press ▲ or ▼ to `Yes`. Press OK to select.

NOTICE:
When an entry is deleted, the association between the entry and its programmed number key(s) is removed.

A positive indicator tone sounds. The display shows `Contact Saved`.
The screen automatically returns to the previous menu.

6.11.7.5

Adding New Contacts

Follow the procedure to add new contacts on your radio.

1. Press OK to access the menu.
2. Press ▲ or ▼ to Contacts. Press OK to select.
3. Press ▲ or ▼ to New Contact. Press OK to select.
4. Press ▲ or ▼ to select contact type Radio Contact or Phone Contact. Press OK to select.
5. Enter the contact number with the keypad, and press OK to proceed.
6. Enter the contact name with the keypad, and press OK to proceed.
7. Press ▲ or ▼ to the required ringer type.

   Press OK to select.

   A positive indicator tone sounds. The display shows a positive mini notice.

6.11.7.6

Setting Default Contact

Follow the procedure to set the default contact on your radio.

1. Press OK to access the menu.
2. Press ▲ or ▼ to Contacts. Press OK to select.
3. Press ▲ or ▼ to the required alias or ID.

   Press OK to select.

4 Press ▲ or ▼ to `Set as Default`. Press OK to select.

A positive indicator tone sounds. The display shows a positive mini notice. The display shows ✓ beside the selected default alias or ID.

6.11.8

Call Indicator Settings

This feature allows you to configure call or text message ringing tones.

6.11.8.1

Activating or Deactivating Call Ringers for Call Alerts

1 Press OK to access the menu.

2 Press ▲ or ▼ to `Utilities`. Press OK to select.

3 Press ▲ or ▼ to `Radio Settings`. Press OK to select.

4 Press ▲ or ▼ to `Tones/Alert`. Press OK to select.

5 Press ▲ or ▼ to `Call Ringers`. Press OK to select.

6 Press ▲ or ▼ to `Call Alert`. Press OK to select.

7 Press ▲ or ▼ to the required tone. Press OK to select. The display shows ✓ beside the selected tone.

6.11.8.2

Activating or Deactivating Call Ringers for Private Calls

Follow the procedure to activate or deactivate call ringers for Private Calls on your radio.

1. Press OK to access the menu.
2. Press ▲ or ▼ to `Utilities`. Press OK to select.
3. Press ▲ or ▼ to `Radio Settings`. Press OK to select.
4. Press ▲ or ▼ to `Tones/Alerts`. Press OK to select.
5. Press ▲ or ▼ to `Call Ringers`. Press OK to select.
6. Press ▲ or ▼ to `Private Call`. Press OK to select.

   The display shows ✓ beside `On` if Private Call ringing tones are enabled.

   The display shows ✓ beside `Off` if Private Call ringing tones are disabled.
7. Press ▲ or ▼ to the required tone. Press OK to select.

   If enabled, ✓ appears beside `Enabled`. If disabled, ✓ disappears beside `Enabled`.

6.11.8.3

Activating or Deactivating Call Ringers for Selective Calls

Follow the procedure to activate or deactivate call ringers for Selective Calls on your radio.

1. Press OK to access the menu.

2 Press ▲ or ▼ to `Utilities`. Press OK to select.

3 Press ▲ or ▼ to `Radio Settings`. Press OK to select.

4 Press ▲ or ▼ to `Tones/Alerts`. Press OK to select.

5 Press ▲ or ▼ to `Call Ringers`. Press OK to select.

6 Press ▲ or ▼ to `Selective Call`. Press OK to select.

The display shows ✓ and the current tone.

7 Press ▲ or ▼ to the required tone. Press OK to select. The display shows ✓ beside the selected tone.

6.11.8.4

Activating or Deactivating Call Ringers for Text Messages

Follow the procedure to activate or deactivate call ringers for text messages on your radio.

1 Press OK to access the menu.

2 Press ▲ or ▼ to `Utilities`. Press OK to select.

3 Press ▲ or ▼ to `Radio Settings`. Press OK to select.

4 Press ▲ or ▼ to `Tones/Alerts`. Press OK to select.

5 Press ▲ or ▼ to `Call Ringers`. Press OK to select.

6 Press ▲ or ▼ to Text Message. Press OK to select.

The display shows ✓ and the current tone.

7 Press ▲ or ▼ to the required tone. Press OK to select.

The display shows ✓ beside the newly selected tone.

6.11.8.5

Activating or Deactivating Call Ringers for Telemetry Status with Text

Follow the procedure to activate or deactivate call ringers for telemetry status with text on your radio.

1 Press OK to access the menu.

2 Press ▲ or ▼ to Utilities. Press OK to select.

3 Press ▲ or ▼ to Radio Settings. Press OK to select.

4 Press ▲ or ▼ to Tones/Alert. Press OK to select.

5 Press ▲ or ▼ to Call Ringers. Press OK to select.

6 Press ▲ or ▼ to Telemetry. Press OK to select.

The current tone is indicated by a ✓ .

6.11.8.6

Assigning Ring Styles

The radio can be programmed to sound one of eleven predefined ringing tones when receiving a Private Call, a Call Alert, or a Text Message from a particular contact.The

radio sounds out each ring style as you navigate through the list.

1 Press OK to access the menu.

2 Press ▲ or ▼ to Contacts. Press OK to select.

The entries are alphabetically sorted.

3 Press ▲ or ▼ to the required alias or ID.

Press OK to select.

4 Press ▲ or ▼ to View/Edit. Press OK to select.

5 Press OK until display shows Ringer menu

A ✓ indicates the current selected tone.

6 Press ▲ or ▼ to the required tone. Press OK to select.

A ✓ appears beside the selected tone.

6.11.8.7

Escalating Alarm Tone Volume

The radio can be programmed to continually alert, when a radio call remains unanswered. This is done by automatically increasing the alarm tone volume over time. This feature is known as Escalert.

6.11.9

Call Log Features

Your radio keeps track of all recent outgoing, answered, and missed Private Calls. The call log feature is used to view and manage recent calls.

Missed Call Alerts may be included in the call logs, depending on the system configuration on your radio. You can perform the following tasks in each of your call lists:

- Store Alias or ID to Contacts

- Delete Call
- Delete All Calls
- View Details

6.11.9.1

Viewing Recent Calls

1 Press OK to access the menu.

2 Press ▲ or ▼ to `Call Log`. Press OK to select.

3 Press ▲ or ▼ to the preferred list. The options are `Missed`, `Answered`, and `Outgoing` lists.

Press OK to select.

The display shows the most recent entry.

4 Press ▲ or ▼ to view the list.

You can start a call with the alias or ID the display is currently showing by pressing the **PTT** button.

6.11.9.2

Deleting Calls from the Call List

Follow the procedure to delete calls from the Call list.

1 Press OK to access the menu.

2 Press ▲ or ▼ to `Call Log`. Press OK to select.

3 Press ▲ or ▼ to the required list. Press OK to select.

If the list is empty:

- A tone sounds.
- The display shows `List Empty`.

4 Press ▲ or ▼ to the required alias or ID.

Press OK to select.

5 Press ▲ or ▼ to `Delete Entry?`. Press OK to select.

6 Do one of the following:

- Press OK to select `Yes` to delete the entry. The display shows `Entry Deleted`.
- Press ▲ or ▼ to `No`. Press OK to select.

The radio returns to the previous screen.

6.11.9.3

Viewing Call List Details

Follow the procedure to view call details on your radio.

1 Press OK to access the menu.

2 Press ▲ or ▼ to `Call Log`. Press OK to select.

3 Press ▲ or ▼ to the required list. Press OK to select.

4 Press ▲ or ▼ to the required alias or ID.

Press OK to select.

5 Press ▲ or ▼ to `View Details`. Press OK to select.

The display shows the call details.

6.11.9.4

Storing Aliases or IDs from the Call List

Follow the procedure to store aliases or IDs on your radio from the Call list.

1 Press OK to access the menu.

2 Press ▲ or ▼ to `Call Log`. Press OK to select.

3 Press ▲ or ▼ to the required list. Press OK to select.

4 Press ▲ or ▼ to the required alias or ID.

Press OK to select.

5 Press ▲ or ▼ to `Store`. Press OK to select.

The display shows a blinking cursor.

6 Enter the rest of the characters of the required alias.

Press OK to select.

You can store an ID without an alias.

The display shows a positive mini notice.

6.11.10

Call Alert Operation

Call Alert paging enables you to alert a specific radio user to call you back.

This feature is applicable for subscriber aliases or IDs only and is accessible through the menu using Contacts, manual dial, or a programmed **One Touch Access** button.

6.11.10.1

Making Call Alerts

Follow the procedure to make Call Alerts on your radio.

1 Press the programmed **One Touch Access** button.

The display shows `Call Alert` and the subscriber alias or ID. The green LED lights up.

2 Wait for acknowledgment.

If the Call Alert acknowledgment is received, the display shows a positive mini notice.

If the Call Alert acknowledgment is not received, the display shows a negative mini notice.

6.11.10.2

Making Call Alerts by Using the Contacts List

1 Press OK to access the menu.

2 Press ▲ or ▼ to Contacts. Press OK to select.

3 Press ▲ or ▼ to the required alias or ID.

Press OK to select.

4 Press ▲ or ▼ to Call Alert. Press OK to select.

The display shows Call Alert and the subscriber alias or ID. The green LED lights up.

5 Wait for acknowledgment.

- If the acknowledgment is received, the display shows a positive mini notice.
- If the acknowledgment is not received, the display shows a negative mini notice.

6.11.10.3

Making Call Alerts by Using the Manual Dial

Follow the procedure to make Call Alerts on your radio by using the manual dial.

1 Press OK to access the menu.

2 Press ▲ or ▼ to Contacts. Press OK to select.

3 Press ▲ or ▼ to Manual Dial. Press OK to select.

The display shows a blinking cursor.

4 Enter the subscriber ID and press OK to proceed.

5 Press ▲ or ▼ to `Call Alert`. Press OK to select.

The display shows `Call Alert` and the subscriber alias or ID. The green LED lights up.

6 Wait for acknowledgment.

- If the Call Alert acknowledgment is received, the display shows a positive mini notice.
- If the Call Alert acknowledgment is not received, the display shows a negative mini notice.

6.11.10.4

Responding to Call Alerts

When you receive a Call Alert:

- A repetitive tone sounds.
- The yellow LED blinks.
- The display shows the notification list listing a Call Alert with the alias or ID of the calling radio.

Depending on the configuration by your dealer or system administrator, you can respond to a Call Alert by doing one of the following:

- Press the **PTT** button and respond with a Private Call directly to the caller.
- Press the **PTT** button to continue normal talkgroup communication.
  The Call Alert is moved to the Missed Call option at the Call Log menu. You can respond to the caller from the Missed Called log.

See Notification List on page 191 and Call Log Features on page 130 for more information.

6.11.11

Dynamic Caller Alias

This feature allows you to dynamically edit a Caller Alias from your radio front panel.

NOTICE:
A keypad microphone is required to perform this feature.

When in a call, the receiving radio displays the Caller Alias of the transmitting radio.

The Caller Aliases list can store up to 500 Caller Aliases of transmitting radio. You can view or make Private Calls from the Caller Aliases list. When you turn off your radio, the history of receiving Caller Aliases is removed from the Caller Aliases list.

6.11.11.1

Viewing the Caller Aliases List

You can access the Caller Aliases list to view the transmitting Caller Alias details.

1. Press OK to access the menu.
2. Press ▲ or ▼ to `Caller Aliases`. Press OK to select.
3. Press ▲ or ▼ to the preferred list. Press OK to select.
4. Press ▲ or ▼ to `View Details`. Press OK to select.

6.11.11.2

Initiating Private Call From the Caller Aliases List

You can access the Caller Aliases list to initiate Private Call.

1. Press OK to access the menu.
2. Press ▲ or ▼ to `Caller Aliases`. Press OK to select.

3 Press ▲ or ▼ to the ***<required Caller Alias>***.

4 To call, press and hold the **PTT** button.

6.11.12

Mute Mode

Mute Mode provides an option to silence all audio indicators on your radio.

When Mute Mode is initiated, all audio indicators are muted except higher priority features such as emergency operations.

When Mute Mode is exited, your radio resumes playing ongoing tones and audio transmissions.

IMPORTANT:
You can only enable either Face Down or Man Down one at a time. Both features cannot be enabled together.

6.11.12.1

Turning On Mute Mode

Follow the procedure to turn on Mute Mode.

Access this feature by using the programmed **Mute Mode** button.

The following occurs when Mute mode is enabled:

- Positive Indicator Tone sounds.
- Display shows `Mute Mode On`.
- The red LED light starts blinking and remains blinking until Mute Mode is exited.
- Display shows **Mute Mode** icon on home screen.
- Radio is muted.
- Mute Mode Timer begins counting down the duration that is configured.

6.11.12.2

Setting Mute Mode Timer

Mute Mode feature can be enabled for a pre-configured amount of time by setting the Mute Mode Timer. The timer duration is configured in the radio menu and can range between 0.5–6 hours. Mute Mode is exited once the timer expires.

If the timer is left at 0, the radio remains in Mute mode for an indefinite period until the programmed **Mute Mode** button is pressed.

1. Press OK to access the menu.
2. Press ▲ or ▼ to `Utilities`. Press OK to select.
3. Press ▲ or ▼ to `Radio Settings`. Press OK to select.
4. Press ▲ or ▼ to `Mute Timer`. Press OK to select.
5. Press ▲ or ▼ to edit the numeric value of each digit, and press OK .

6.11.12.3

Exiting Mute Mode

This feature can be exited automatically once the Mute Mode Timer expires.

Do one of the following to exit Mute mode manually:

- Press the programmed **Mute Mode** button.
- Press the **PTT** button on any entry.

The following occurs when Mute mode is disabled:

- Negative Indicator Tone sounds.
- Display shows `Mute Mode Off`.
- The blinking red LED turns off.
- **Mute Mode** icon disappears from home screen.
- Your radio unmutes and speaker state is restored.
- If the timer has not expired, Mute mode timer is stopped.

NOTICE:
Mute Mode is also exited if the user transmits voice or switches to an unprogrammed channel.

6.11.13

Emergency Operation

An Emergency Alarm is used to indicate a critical situation. You are able to initiate an Emergency at any time even when there is activity on the current channel.

Your dealer can set the duration of a button press for the programmed **Emergency** button, except for long press, which is similar with all other buttons:

Short Press
Duration between 0.05 seconds and 0.75 seconds.

Long Press
Duration between 1.00 second and 3.75 seconds.

The **Emergency** button is assigned with the Emergency On/Off feature. Check with your dealer for the assigned operation of the **Emergency** button.

NOTICE:
If a short press to the **Emergency** button initiates Emergency mode, then a long press to the same enables the radio to exit Emergency mode.

If a long press to the **Emergency** button initiates Emergency mode, then a short press to the same enables the radio to exit Emergency mode.

Your radio supports three Emergency Alarms:

- Emergency Alarm
- Emergency Alarm with Call
- Emergency Alarm with Voice to Follow

NOTICE:
Only one of the Emergency Alarms above can be assigned to the programmed **Emergency** button or the Emergency footswitch.

In addition, each alarm has the following types:

Regular
Radio transmits an alarm signal and shows audio and/or visual indicators.

Silent
Radio transmits an alarm signal without any audio or visual indicators. Radio receives calls without any sound through the speaker, until the programmed *hot mic* transmission period is over and/or you press the **PTT** button.

Silent with Voice
Radio transmits an alarm signal without any audio or visual indicators, but allow incoming calls to sound through the speaker.

6.11.13.1

Receiving Emergency Alarms

When you receive an Emergency Alarm:

- A tone sounds.
- The red LED blinks.
- The display shows the **Emergency** icon, and the Emergency caller alias or if there is more than one alarm, all emergency caller aliases are displayed in an Alarm List.

1 Do one of the following:

- If only one alarm, press OK to view more details.
- If more than one alarm, press ▲ or ▼ to the required alias, and press OK to view more details.

2 Press OK to view the action options.

3 Press ⮌ and select `Yes` to exit the Alarm list.

4 Press OK to access the menu.

5 Select `Alarm List` to revisit the Alarm list.

6 The tone sounds and the LED blinks red until you exit the Emergency mode. However, the tone can be silenced. Do one of the following:

- Press the **PTT** button to call the group of radios which received the Emergency Alarm.
- Press any programmable button.
- Exit Emergency mode. See Exiting Emergency Mode After Receiving the Emergency Alarm on page 430.

7 To return to home screen, perform the following actions:

a Press ⮌.

b Press ▲ or ▼ to `Yes`.

c Press OK to select.

The radio returns to the home screen and the display shows the Emergency icon.

6.11.13.2

Responding to Emergency Alarms

1 Make sure the display shows the Alarm List. Press ▲ or ▼ to the required alias or ID.

2 Press the **PTT** button to transmit non-emergency voice to the same group the Emergency Alarm targeted.

If the Channel Free Indication feature is enabled, you hear a short alert tone the moment the transmitting radio releases the **PTT** button, indicating the channel is free for you to respond.

NOTICE:
Emergency voice can only be transmitted by the emergency initiating radio. All other radios, including the emergency receiving radio, transmit non-emergency voice.

The green LED lights up. Your radio remains in the Emergency mode.

3 Do one of the following:

- Wait for the Talk Permit Tone to end and speak clearly into the microphone if enabled.
- Wait for the **PTT** Sidetone to end and speak clearly into the microphone if enabled.

4 Release the **PTT** button to listen.

When the emergency initiating radio responds:

- The green LED blinks.
- The display shows the **Group Call** icon and ID, transmitting radio ID, and the Alarm list.

6.11.13.3

Exiting Emergency Mode After Receiving the Emergency Alarm

Do one of the following to exit Emergency mode after receiving Emergency alarm:

- Delete the alarm items.
- Power down the radio.

6.11.13.4

Sending Emergency Alarms

This feature allows you to send an Emergency Alarm, a non-voice signal, which triggers an alert indication on a group of radios. Your radio does not display any audio or visual indicators during Emergency mode when it is set to Silent.

Follow the procedure to send Emergency Alarms on your radio.

1 Press the programmed **Emergency On** button.

You see one of these results:

- The display shows `Tx Alarms` and the destination alias.
- The display shows `Tx Telegram` and the destination alias.

The green LED lights up. The **Emergency** icon appears.

NOTICE:
If programmed, the Emergency Search tone sounds. This tone is muted when the radio transmits or receives voice, and stops when the radio exits Emergency mode. The Emergency Search tone can be programmed through CPS.

2 Wait for acknowledgment.

If successful:

- The Emergency tone sounds.
- The red LED blinks.
- The display shows `Alarm Sent`.

If unsuccessful after all retries have been exhausted:

- A tone sounds.
- The display shows `Alarm Failed`.

The radio exits the Emergency Alarm mode and returns to the Home screen.

6.11.13.5

Sending Emergency Alarms with Call

This feature allows you to send an Emergency Alarm with Call to a group of radios. Upon acknowledgement by a radio within the group, the group of radios can communicate over a programmed Emergency channel. Follow the procedure to send Emergency Alarms with call on your radio.

1 Press the programmed **Emergency On** button or the **Emergency** footswitch. The display shows Sending Alarm, which alternates with your radio ID.

You see the following:

- The display shows `Tx Telegram` and the destination alias.

The green LED lights up. The **Emergency** icon appears.

NOTICE:
If programmed, the Emergency Search tone sounds. This tone is muted when the radio transmits or receives voice, and stops when the radio exits Emergency mode. The Emergency Search tone can be programmed by your dealer or system administrator.

2 Wait for acknowledgment.

If successful:

- The Emergency tone sounds.
- The red LED blinks.
- The display shows `Alarm Sent`.
- Your radio enters the Emergency call mode when the display shows `Emergency` and the destination group alias.

3 Press the **PTT** button to make the call.

The green LED lights up. The display shows the **Group Call** icon.

4 Do one of the following:

- Wait for the Talk Permit Tone to end and speak clearly into the microphone if enabled.
- Wait for the **PTT** Sidetone to end and speak clearly into the microphone if enabled.

5 Release the **PTT** button to listen.

The display shows the caller and group aliases.

6 If the Channel Free Indication feature is enabled, you hear a short alert tone the moment the transmitting radio releases the **PTT** button, indicating the channel is free for you to respond. Press the **PTT** button to respond to the call.

7 To exit the Emergency mode once the call ends, press the **Emergency Off** button.

The radio returns to the Home screen.

6.11.13.6

Emergency Alarms with Voice to Follow

This feature allows you to send an Emergency Alarm with Voice to Follow to a group of radios. Your radio microphone is automatically activated, allowing you to communicate with the group of radios without pressing the **PTT** button. This activated microphone state is also known as *hot mic*.

NOTICE:
Your radio cannot detect a non-IMPRES microphone that is attached to the rear accessory connector.
When no microphone is detected at the specified programmed connector, your radio checks the alternative connector. Here, your radio gives priority to the detected microphone.

If your radio has Emergency Cycle Mode enabled, repetitions of *hot mic* and receiving period are made for a programmed duration. During Emergency Cycle Mode, received calls sound through the speaker.

If you press the **PTT** button during the programmed receiving period, you hear a prohibit tone, indicating that you should release the **PTT** button. The radio ignores the **PTT** button press and remains in Emergency mode.

If you press the **PTT** button during *hot mic*, and continue to press it after the *hot mic* duration expires, the radio continues to transmit until you release the **PTT** button.

If the Emergency Alarm request fails, the radio does not retry to send the request, and enters the *hot mic* state directly.

NOTICE:
Some accessories may not support *hot mic*. Check with your dealer or system administrator for more information.

6.11.13.7

Sending Emergency Alarms with Voice to Follow

1 Press the programmed **Emergency On** button or the **Emergency** footswitch.

You see one of these results:

- The display shows `Tx Alarm` and the destination alias.

The green LED lights up. The **Emergency** icon appears.

2 Once the display shows `Alarm Sent`, speak clearly into the microphone.

The radio automatically stops transmitting when:

- The cycling duration between *hot mic* and receiving calls expires, if Emergency Cycle Mode is enabled.
- The *hot mic* duration expires, if Emergency Cycle Mode is disabled.

3 Press the **Emergency Off** button to exit the Emergency mode.

The radio returns to the Home screen.

6.11.13.8

Reinitiating Emergency Mode

Perform one of the following actions:

- Change the channel while the radio is in Emergency mode.

NOTICE:
You can reinitiate emergency mode only if you enable emergency alarm on the new channel.

- Press the programmed **Emergency On** button during an emergency initiation or transmission state.

The radio exits the Emergency mode, and reinitiates Emergency.

6.11.13.9

Exiting Emergency Mode After Sending the Emergency Alarm

This feature is only applicable to the radio sending the Emergency Alarm.

Your radio exits Emergency mode when:

- An acknowledgment is received (for Emergency Alarm only).
- All retries to send the alarm have been exhausted.

NOTICE:
If your radio is powered off, it exits the Emergency mode. The radio does not reinitiate the Emergency mode automatically when it is turned on again.

Follow the procedure to exit Emergency mode on your radio.

Do one of the following:

- Press the programmed **Emergency Off** button.
- Change the channel to a new channel that has no emergency system configured.
  The display shows `No Emergency`.

6.11.13.10

Deleting an Alarm Item from the Alarm List

1. Press OK to access the menu.
2. Press ▲ or ▼ to `Alarm List`. Press OK to select.

3 Press ▲ or ▼ to the required alarm item.

Press OK to select.

4 Press ▲ or ▼ to Delete. Press OK to select.

6.11.14

Text Messaging

Your radio is able to receive data, for example a text message, from another radio or a text message application.

There are two types of text messages, Digital Mobile Radio (DMR) Short Text Message and text message. The maximum length of a DMR Short Text Message is 23 characters. The maximum length of a text message is 280 characters, including the subject line. The subject line only appears when you receive messages from e-mail applications.

NOTICE:
The maximum character length is only applicable for models with the latest software and hardware. For radio models with older software and hardware, the maximum length of a text message is 140 characters. Contact your dealer for more information.

6.11.14.1

Text Messages

The text messages are stored in an Inbox, and sorted according to the most recently received.

6.11.14.1.1

Viewing Text Messages

1 Press OK to access the menu.

2 Press ▲ or ▼ to Messages. Press OK to select.

3 Press ▲ or ▼ to Inbox. Press OK to select.

If the Inbox is empty:

- The display shows `List Empty`.
- A tone sounds, if the Keypad Tone is turned on.

4 Press ▲ or ▼ to the required message. Press OK to select.

The display shows a subject line if the message is from an e-mail application.

6.11.14.1.2

Viewing Telemetry Status Text Messages

Follow the procedure to view a telemetry status text message from the inbox.

1 Press OK to access the menu.

2 Press ▲ or ▼ to `Messages`. Press OK to select.

3 Press ▲ or ▼ to `Inbox`. Press OK to select.

4 Press ▲ or ▼ to the required message. Press OK to select.

You cannot reply to a Telemetry Status text message.

The display shows `Telemetry: <Status Text Message>`.

5 Long press ⏻ to return to the Home screen.

6.11.14.1.3

Responding to Text Messages

Follow the procedure to respond to text messages on your radio.

When you receive a text message:

- The display shows the Notification list with the alias or ID of the sender.

- The display shows the **Message** icon.

NOTICE:
The radio exits the Text Message alert screen and sets up a Private or Group Call to the sender of the message if the **PTT** button is pressed.

1 Do one of the following:

- Press ▲ or ▼ to `Read`. Press OK to select.
  The display shows the text message. The display shows a subject line if the message is from an e-mail application.
- Press ▲ or ▼ to `Read Later`. Press OK to select.
  The radio returns to the screen you were on prior to receiving the text message.
- Press ▲ or ▼ to `Delete`. Press OK to select.

2 Do one of the following:

- Press OK to return to inbox.
- Press OK a second time to reply, forward, or delete the text message.

6.11.14.1.4

Responding to Text Messages with Quick Text

Follow the procedure to respond to text messages with Quick Text messages on your radio.

1 Do one of the following:

- Press the programmed **Text Message** button. Proceed to Step step 3.
- Press OK to access the menu.

2 Press ▲ or ▼ to `Messages`. Press OK to select.

3 Press ▲ or ▼ to `Inbox`. Press OK to select.

4 Press ▲ or ▼ to the required message. Press OK to select.

The display shows a subject line if the message is from an e-mail application.

5 Press OK to access the sub-menu.

6 Press ▲ or ▼ to `Reply`. Press OK to select.

7 Press ▲ or ▼ to `Quick Reply`. Press OK to select.

8 Press ▲ or ▼ to the required message. Press OK to select.

The display shows a transitional mini notice, confirming the message is being sent.

9 Wait for acknowledgment.

If successful:

- A tone sounds.
- The display shows a positive mini notice.

If unsuccessful:

- A tone sounds.
- The display shows a negative mini notice.
- The radio returns to the `Resend` option screen.

6.11.14.1.5

Resending Text Messages

When you are at the `Resend` option screen:

Press OK to resend the same message to the same subscriber or group alias or ID.

If successful:

- A positive indicator tone sounds.
- The display shows a positive mini notice.

If unsuccessful:

- A negative indicator tone sounds.
- The display shows a negative mini notice.

- The radio returns to the Resend option screen.

6.11.14.1.6

Forwarding Text Messages

Follow the procedure to forward text messages on your radio.

When you are at the Resend option screen:

1. Press ▲ or ▼ to Forward, and press OK to send the same message to another subscriber or group alias or ID.

2. Press ▲ or ▼ to the required alias or ID.

   Press OK to select.

   The display shows a transitional mini notice, confirming your message is being sent.

3. Wait for acknowledgment.

   If successful:

   - A positive indicator tone sounds.
   - The display shows a positive mini notice.

   If unsuccessful:

   - A negative indicator tone sounds.
   - The display shows a negative mini notice.

NOTICE:
You can also manually select a target radio address (see Forwarding Text Messages by Using the Manual Dial on page 439).

6.11.14.1.7

Forwarding Text Messages by Using the Manual Dial

Follow the procedure to forward text messages by using the manual dial on your radio.

1. Press ▲ or ▼ to Forward. Press OK to select.

2. Press OK to send the same message to another subscriber or group alias or ID.

3 Press ▲ or ▼ to Manual Dial. Press OK to select.

The display shows Radio Number:.

4 Enter the subscriber ID, and press OK to proceed.

The display shows a transitional mini notice, confirming your message is being sent.

5 Wait for acknowledgment.

If successful:

- A tone sounds.
- The display shows a positive mini notice.

If unsuccessful:

- A tone sounds.
- The display shows a negative mini notice.

6.11.14.1.8

Editing Text Messages

Select Edit to edit the message.

NOTICE:
If a subject line is present (for messages received from an e-mail application), you cannot edit it.

1 Press ▲ or ▼ to Edit. Press OK to select.

The display shows a blinking cursor.

2 Use the keypad to edit your message.

- Press ◀ to move one space to the left.
- Press ▶ or # to move one space to the right.
- Press * to delete any unwanted characters.
- Long press # to change text entry method.

3 Press OK once message is composed.

4 Do one of the following:

- Press ▲ or ▼ to Send and press OK to send the message.

- Press ▲ or ▼ to Save and press OK to save the message to the Drafts folder.
- Press ↩ to edit the message.
- Press ↩ to choose between deleting the message or saving it to the Drafts folder.

6.11.14.1.9

Writing Text Messages

Follow the procedure to write text message on your radio.

1 Do one of the following:
   - Press the programmed **Text Message** button. Proceed to step 3.
   - Press OK to access the menu.

2 Press ▲ or ▼ to Messages. Press OK to select.

3 Press ▲ or ▼ to Compose. Press OK to select.

   A blinking cursor appears.

4 Use the keypad to type your message.

   Press ◀ to move one space to the left.

   Press ▶ or # to move one space to the right.

   Press * to delete any unwanted characters.

   Long press # to change text entry method.

5 Press OK once message is composed.

   Do one of the following:
   - Press OK to send the message.
   - Press ↩. Press ▲ or ▼ to choose among editing, deleting, or saving the message.

     Press OK to select.

6.11.14.1.10

Sending Text Messages

It is assumed that you have a newly written text message or a saved text message.

Select the message recipient. Do one of the following:

- Press ▲ or ▼ to the required alias or ID.

  Press OK to select.

- Press ▲ or ▼ to `Manual Dial`. Press OK to select.Key in the subscriber ID. The first line of the display shows `Radio Number:`. The second line of the display shows a blinking cursor. Key in the subscriber alias or ID. Press OK .

The display shows transitional mini notice, confirming your message is being sent.

If successful:

- A tone sounds.
- The display shows positive mini notice.

If unsuccessful:

- A low tone sounds.
- The display shows negative mini notice.
- The message is moved to the Sent Items folder.
- The message is marked with a Send Failed icon.

NOTICE:
For a newly written text message, the radio returns you to the `Resend` option screen.

6.11.14.1.11

Deleting Text Messages from the Inbox

Follow the procedure to delete text messages from the Inbox on your radio.

1 Do one of the following:

- Press the programmed **Text Message** button. Proceed to step 3.
- Press OK to access the menu.

2 Press ▲ or ▼ to Messages. Press OK to select.

3 Press ▲ or ▼ to Inbox. Press OK to select.

If the Inbox is empty:

- The display shows List Empty.
- A tone sounds.

4 Press ▲ or ▼ to the required message. Press OK to select.

The display shows a subject line if the message is from an e-mail application.

5 Press OK to access the sub-menu.

6 Press ▲ or ▼ to Delete. Press OK to select.

7 Press ▲ or ▼ to Yes. Press OK to select.

The display shows a positive mini notice. The screen returns to the Inbox.

6.11.14.1.12

Deleting All Text Messages from the Inbox

Follow the procedure to delete all text messages from the Inbox on your radio.

1 Do one of the following:

- Press the programmed **Text Message** button. Proceed to step 3.
- Press OK to access the menu.

2 Press ▲ or ▼ to Messages. Press OK to select.

3 Press ▲ or ▼ to Inbox. Press OK to select.

If the Inbox is empty:

- The display shows `List Empty`.
- A tone sounds.

4 Press ▲ or ▼ to `Delete All`. Press OK to select.

5 Press ▲ or ▼ to `Yes`. Press OK to select.

The display shows a positive mini notice.

6.11.14.2

Sent Text Messages

Once a message is sent to another radio, it is saved in Sent Items folder. The most recent sent text message is always added to the top of the Sent Items folder. You can resend, forward, edit, or delete a Sent text message.

The Sent Items folder is capable of storing a maximum of 30 last sent messages. When the folder is full, the next sent text message automatically replaces the oldest text message in the folder.

If you exit the message sending screen while the message is being sent, the radio updates the status of the message in the Sent Items folder without providing any indication in the display or via sound.

If the radio changes mode or powers down before the status of the message in Sent Items folder is updated, the radio cannot complete any In-Progress messages and automatically marks it with a **Send Failed** icon.

The radio supports a maximum of five In-Progress messages at one time. During this period, the radio cannot send any new message and automatically marks it with a **Send Failed** icon.

If you long press ↩ at any time, the radio returns to the Home screen.

NOTICE:
If the channel type, for example a conventional digital or Capacity Plus channel, is not a match, you can only edit, forward, or delete a Sent message.

6.11.14.2.1

Viewing Sent Text Messages

Follow the procedure to view sent text messages on your radio.

1 Do one of the following:

- Press the programmed **Text Message** button. Proceed to step 3.
- Press OK to access the menu.

2 Press ▲ or ▼ to `Messages`. Press OK to select.

3 Press ▲ or ▼ to `Sent Items`. Press OK to select.

If the Sent Items folder is empty:

- The display shows `List Empty`.
- A low tone sounds, if the Keypad Tone is turned on.

4 Press ▲ or ▼ to the required message. Press OK to select.

The icon at the top right corner of the screen indicates the status of the message. See Sent Item Icons.

6.11.14.2.2

Sending Sent Text Messages

Follow the procedure to send a sent text message on your radio.

When you are viewing a Sent message:

1 Press OK while viewing the message.

2 You can either resend or forward the sent text message. Do one of the following:

- ▼ to `Resend`. Press OK to select.
- ▼ to `Forward`. Press OK to select.

The display shows a transitional mini notice, confirming your message is being sent.

3 Wait for acknowledgment.

If successful:

- A positive indicator tone sounds.
- The display shows a positive mini notice.

If unsuccessful:

- A negative indicator tone sounds.
- The display shows a negative mini notice.
- The radio proceeds to the `Resend` option screen. See Resending Text Messages on page 156 for more information.

6.11.14.2.3

Deleting Sent Text Messages from the Sent Items Folder

Follow the procedure to delete sent text messages from the Sent Items folder on your radio.

When you are viewing a Sent message:

1 Press OK .

2 Press ▲ or ▼ to `Delete`. Press OK to select.

6.11.14.2.4

Deleting All Sent Text Messages from the Sent Items Folder

Follow the procedure to delete all sent text messages from the Sent Items folder on your radio.

1 Do one of the following:
- Press the programmed **Text Message** button. Proceed to step 3.
- Press OK to access the menu.

2 Press ▲ or ▼ to `Messages`. Press OK to select.

3 Press ▲ or ▼ to `Sent Items`. Press OK to select.

If the Sent Items folder is empty:
- The display shows `List Empty`.
- A tone sounds.

4 Press ▲ or ▼ to Delete All. Press OK to select.

5 Do one of the following:

- Press ▲ or ▼ to Yes. Press OK to select.
  The display shows a positive mini notice.
- Press ▲ or ▼ to No. Press OK to select.
  The radio returns to the previous screen.

6.11.14.3

Saved Text Messages

You can save a text message to send it at a later time.

If a **PTT** button press or a mode change causes the radio to exit the text message writing/editing screen while you are in the process of writing or editing a text message, your current text message is automatically saved to the Drafts folder.

The most recent saved text message is always added to the top of the Drafts list.

The Drafts folder stores a maximum of 10 last saved messages. When the folder is full, the next saved text message automatically replaces the oldest text message in the folder.

6.11.14.3.1

Viewing Saved Text Messages

1 Do one of the following:

- Press the programmed **Text Message** button. Proceed to step 3.
- Press OK to access the menu.

2 Press ▲ or ▼ to Messages. Press OK to select.

3 Press ▲ or ▼ to Drafts. Press OK to select.

4 Press ▲ or ▼ to the required message. Press OK to select.

6.11.14.3.2

Editing Saved Text Messages

1 Press OK while viewing the message.

2 Press ▲ or ▼ to Edit. Press OK to select.

A blinking cursor appears.

3 Use the keypad to type your message.

Press ◀ to move one space to the left.

Press ▶ or # to move one space to the right.

Press * to delete any unwanted characters.

Long press # to change text entry method.

4 Press OK once message is composed.

Do one of the following:

- Press ▲ or ▼ to Send. Press OK to send the message.
- Press ↩. Press ▲ or ▼ to choose between saving or deleting the message. Press OK to select.

6.11.14.3.3

Deleting Saved Text Messages from the Drafts Folder

1 Do one of the following:

- Press the programmed **Text Message** button. Proceed to step 3.
- Press OK to access the menu.

2 Press ▲ or ▼ to Messages. Press OK to select.

3 Press ▲ or ▼ to Drafts. Press OK to select.

4 Press ▲ or ▼ to the required message. Press OK to select.

5 Press ▲ or ▼ to `Delete`. Press OK to delete the text message.

6.11.14.4

Quick Text Messages

Your radio supports a maximum of 50 Quick Text messages as programmed by your dealer.

While Quick Text messages are predefined, you can edit each message before sending it.

6.11.14.4.1

Sending Quick Text Messages

Follow the procedure to send predefined Quick Text messages on your radio to a predefined alias.

1 Do one of the following:

- Press the programmed **Text Message** button. Proceed to step 6.
- Press the programmed **One Touch Access** button.
  The display shows a transitional mini notice, confirming your message is being sent.

  Proceed to step 6.
- Press OK to access the menu.

2 Press ▲ or ▼ to `Messages`. Press OK to select.

3 Press ▲ or ▼ to `Quick Text`. Press OK to select.

4 Press ▲ or ▼ to the required Quick Text message. Press OK to select.

5 Do the following to select the recipient and send the message.

The display shows a transitional mini notice, confirming that your message is being sent.

6 Wait for acknowledgment.

If successful:

- A positive indicator tone sounds.
- The display shows a positive mini notice.

If unsuccessful:

- A negative indicator tone sounds.
- The display shows a negative mini notice.
- The radio proceeds to the `Resend` option screen. See Resending Text Messages on page 156 for more information.

6.11.15

Text Entry Configuration

Your radio allows you to configure different text.

You can configure the following settings for entering text on your radio:

- Word Predict
- Word Correct
- Sentence Cap
- My Words

Your radio supports the following text entry methods:

- Numbers
- Symbols
- Predictive or Multi-Tap
- Language (If programmed)

NOTICE:

Press ⮌⌂ at any time to return to the previous screen or long press ⮌⌂ to return to the Home Screen. The radio exits the current screen once the inactivity timer expires.

6.11.15.1

Enabling or Disabling Word Correct

Supplies alternative word choices when the word entered into the text editor is not recognized by the in-built dictionary.

1 Press OK to access the menu.

2 Press ▲ or ▼ to Utilities. Press OK to select.

3 Press ▲ or ▼ to Radio Settings. Press OK to select.

4 Press ▲ or ▼ to Text Entry. Press OK to select.

5 Press ▲ or ▼ to Word Correct. Press OK to select.

6 Do one of the following:

- Press ▲ or ▼ to Word Correct. Press OK to select.
- Press to enable Word Correct. If enabled, ✓ appears beside Enabled.
- Press to disable Word Correct. If disabled, ✓ disappears beside Enabled.

6.11.15.2

Enabling or Disabling Word Predict

Word Predict: Your radio can learn common word sequences that you often enter. It then predicts the next word you may want to use after you enter the first word of a common word sequence into the text editor.

1 Press OK to access the menu.

2 Press ▲ or ▼ to Utilities. Press OK to select.

3 Press ▲ or ▼ to Radio Settings. Press OK to select.

4 Press ▲ or ▼ to Text Entry. Press OK to select.

5 Press ▲ or ▼ to Word Predict. Press OK to select.

6 Do one of the following:

- Press OK to enable the Word Predict. If enabled, ✓ appears beside Enabled.
- Press OK to disable Microphone Dynamic Distortion Control. If disabled, ✓ disappears beside Enabled.

6.11.15.3

Sentence Cap

This feature is used to automatically enable capitalization of the first letter in the first word for every new sentence.

1 Press OK to access the menu.

2 Press ▲ or ▼ to Utilities. Press OK to select.

3 Press ▲ or ▼ to Radio Settings. Press OK to select.

4 Press ▲ or ▼ to Text Entry. Press OK to select.

5 Press ▲ or ▼ to Sentence Cap. Press OK to select.

6 Do one of the following:

- Press OK to enable Sentence Cap. If enabled, ✓ appears beside Enabled.
- Press OK to disable Sentence Cap. If disabled, ✓ disappears beside Enabled.

6.11.15.4

Viewing Custom Words

You can add your own custom words into the in-built dictionary of your radio. Your radio maintains a list to contain these words.

1 Press OK to access the menu.

2 Press ▲ or ▼ to Utilities. Press OK to select.

3 Press ▲ or ▼ to Radio Settings. Press OK to select.

4 Press ▲ or ▼ to Text Entry. Press OK to select.

5 Press ▲ or ▼ to My Words. Press OK to select.

6 Press ▲ or ▼ to List of Words. Press OK to select.

The display shows the list of custom words.

6.11.15.5

Editing Custom Words

You can edit custom words saved in your radio.

1 Press OK to access the menu.

2 Press ▲ or ▼ to Utilities. Press OK to select.

3 Press ▲ or ▼ to Radio Settings. Press OK to select.

4 Press ▲ or ▼ to Text Entry. Press OK to select.

5 Press ▲ or ▼ to My Words. Press OK to select.

6 Press ▲ or ▼ to List of Words. Press OK to select.

Display shows the list of custom words.

7 Press ▲ or ▼ to the required word. Press OK to select.

8 Press ▲ or ▼ to Edit. Press OK to select.

9 Use the keypad to edit your custom word.

- Press ◀ to move one space to the left.
- Press ▶ key to move one space to the right.
- Press the * key to delete any unwanted characters.
- Long press # to change text entry method.

10 Press OK once your custom word is completed.

The display shows transitional mini notice, confirming your custom word is being saved.

- If the custom word is saved, a tone sounds and the display shows positive mini notice.
- If the custom word is not saved, a low tone sounds and the display show negative mini notice.

6.11.15.6

Adding Custom Words

You can add custom words into the in-built radio dictionary.

1 Press OK to access the menu.

2 Press ▲ or ▼ to Utilities. Press OK to select.

3 Press ▲ or ▼ to Radio Settings. Press OK to select.

4 Press ▲ or ▼ to Text Entry. Press OK to select.

5 Press ▲ or ▼ to My Words. Press OK to select.

6 Press ▲ or ▼ to Add New Word. Press OK to select.

Display shows the list of custom words.

7 Use the keypad to edit your custom word.

- Press ◀ to move one space to the left.
- Press ▶ key to move one space to the right.
- Press the key to delete any unwanted characters.
- Long press to change text entry method.

8 Press OK once your custom word is completed.

The display shows transitional mini notice, confirming your custom word is being saved.

- If the custom word is saved, a tone sounds and the display show positive mini notice.
- If the custom word is not saved, a low tone sounds and the display show negative mini notice.

6.11.15.7

Deleting a Custom Word

You can delete the custom words saved in your radio.

1 Press OK to access the menu.

2 Press ▲ or ▼ to `Utilities`. Press OK to select.

3 Press ▲ or ▼ to `Radio Settings`. Press OK to select.

4 Press ▲ or ▼ to `Text Entry`. Press OK to select.

5 Press ▲ or ▼ to `My Words`. Press OK to select.

6 Press ▲ or ▼ to the required word. Press OK to select.

7 Press ▲ or ▼ to `Delete`. Press OK to select.

8 Choose one of the following.

- At Delete Entry?, press OK to select Yes. The display shows Entry Deleted.
- Press ▲ or ▼ to No. Press OK to return to the previous screen.

6.11.15.8

Deleting All Custom Words

You can delete all custom words from the in-built dictionary of your radio.

1 Press OK to access the menu.

2 Press ▲ or ▼ to Utilities. Press OK to select.

3 Press ▲ or ▼ to Radio Settings. Press OK to select.

4 Press ▲ or ▼ to Text Entry. Press OK to select.

5 Press ▲ or ▼ to My Words. Press OK to select.

6 Press ▲ or ▼ to Delete All. Press OK to select.

7 Do one of the following:

- At Delete Entry?, press OK to select Yes. The display shows All Entries Deleted.
- Press ▲ or ▼ to No to return to the previous screen. Press OK to select.

6.11.16

Job Tickets

This feature allows your radio to receive messages from the dispatcher listing out tasks to perform.

NOTICE:
This feature can be customized through the Customer Programming Software (CPS) according to user requirements. Check with your dealer or system administrator for more information.

There are two folders that contain different Job Tickets:

My Tasks folder
Personalized Job Tickets assigned to your signed in user ID.

Shared Tasks folder
Shared Job Tickets assigned to a group of individuals.

You can respond to Job Tickets in order to sort them into Job Ticket Folders. By default, the folders are **All**, **New**, **Started**, and **Completed**. Check with your dealer or system administrator for an additional 10 folders.

Job Tickets are retained even after the radio is turned off and turned on again.

All Job Tickets are located in the **All** folder. Depending on how your radio is programmed, Job Tickets are sort by their priority level followed by time received. New Job Tickets, Job Tickets with recent changes in state, and Job Tickets with the highest priority are listed first.

Upon reaching the maximum number of Job Tickets, the next Job Ticket automatically replaces the last Job Ticket in your radio. Your radio supports a maximum of 100 or 500 Job Tickets, depending on your radio model. Check with your dealer or system administrator for more information. Your radio automatically detects and discards duplicated Job Tickets with the same Job Ticket ID.

Depending on the importance of the Job Tickets, the dispatcher adds a Priority Level to them. There are three priority levels: Priority 1, Priority 2, and Priority 3. Priority 1 has the highest priority and Priority 3 has the lowest priority. There are also Job Tickets with no priority.

Your radio updates accordingly when dispatcher makes the following changes:

- Modify content of Job Tickets.
- Add or edit Priority Level of Job Tickets.
- Move Job Tickets from folder to folder.
- Canceling of Job Tickets.

6.11.16.1

Accessing the Job Ticket Folder

Follow the procedure to access the Job Ticket folder.

1 Do one of the following:

- Press the programmed **Job Ticket** button. Proceed to step 3.
- Press OK to access the menu.

2 Press ▲ or ▼ to `Job Tickets`. Press OK to select.

3 Press ▲ or ▼ to the required folder. Press OK to select.

4 Press ▲ or ▼ to the required Job Ticket.

Press OK to select.

6.11.16.2

Logging In or Out of the Remote Server

This feature allows you to log in and log out of the remote server by using your user ID.

1 Press OK to access the menu.

2 Press ▲ or ▼ to `Log In`. Press OK to select.

If you are already logged in, menu displays `Log Out`.

The display shows a transitional mini notice, indicating the request is in progress.

3 Wait for acknowledgment.

If successful:

- A positive indicator tone sounds.
- The display shows a positive mini notice.

If unsuccessful:

- A negative indicator tone sounds.
- The display shows a negative mini notice.

6.11.16.3

Creating Job Tickets

Your radio is able to create Job Tickets, which are based on a Job Ticket template and send out tasks that need to be performed.

CPS programming software is required to configure the Job Ticket template.

1. Press OK to access the menu.
2. Press ▲ or ▼ to `Job Tickets`. Press OK to select.
3. Press ▲ or ▼ to `Create Ticket`. Press OK to select.

6.11.16.4

Responding to Job Tickets

Follow the procedure to respond to job tickets on your radio.

1. Press OK to access the menu.
2. Press ▲ or ▼ to `Job Tickets`. Press OK to select.
3. Press ▲ or ▼ to the required folder. Press OK to select.
4. Press ▲ or ▼ to the required job ticket. Press OK to select.
5. Press OK once more to access the sub-menu.

   You can also press the corresponding number key (1–9) to **Quick Reply**.
6. Press ▲ or ▼ to the required job ticket. Press OK to select.

   The display shows a transitional mini notice, indicating the request is in progress.

7 Wait for acknowledgment.

If successful:

- A positive indicator tone sounds.
- The display shows a positive mini notice.

If unsuccessful:

- A negative indicator tone sounds.
- The display shows a negative mini notice.

6.11.16.5

Sending Job Tickets Using One Job Ticket Template

If your radio is configured with one Job Ticket template, perform the following actions to send the Job Ticket.

1 Use the keypad to type the required room number.

Press OK to select.

2 Press ▲ or ▼ to Room Status. Press OK to select.

3 Press ▲ or ▼ to the required option. Press OK to select.

4 Press ▲ or ▼ to Send. Press OK to select.

The display shows a transitional mini notice, indicating the request is in progress.

5 Wait for acknowledgment.

If successful:

- A positive indicator tone sounds.
- The display shows a positive mini notice.

If unsuccessful:

- A negative indicator tone sounds.
- The display shows a negative mini notice.

6.11.16.6

Sending Job Tickets Using More Than One Job Ticket Template

If your radio is configured with more than one Job Ticket template, perform the following actions to send the Job Tickets.

1 Press ▲ or ▼ to the required option. Press OK to select.

2 Press ▲ or ▼ to Send. Press OK to select.

The display shows a transitional mini notice, indicating the request is in progress.

3 Wait for acknowledgment.

If successful:

- A positive indicator tone sounds.
- The display shows a positive mini notice.

If unsuccessful:

- A negative indicator tone sounds.
- The display shows a negative mini notice.

6.11.16.7

Deleting Job Tickets

Follow the procedure to delete job tickets on your radio.

1 Do one of the following:

- Press the programmed **Job Ticket** button. Proceed to step 4
- Press OK to access the menu.

2 Press ▲ or ▼ to Job Tickets. Press OK to select.

3 Press ▲ or ▼ to the required folder. Press OK to select.

4 Press ▲ or ▼ to All folder. Press OK to select.

5 Press ▲ or ▼ to the required Job Ticket.

Press OK to select.

6 Press OK again while viewing the Job Ticket.

7 Press ▲ or ▼ to `Delete`. Press OK to select.

The display shows a transitional mini notice, indicating the request is in progress.

8 Wait for acknowledgment.

If successful:

- A positive indicator tone sounds.
- The display shows a positive mini notice.

If unsuccessful:

- A negative indicator tone sounds.
- The display shows a negative mini notice.

6.11.16.8

Deleting All Job Tickets

Follow the procedure to delete all job tickets on your radio.

1 Do one of the following:

- Press the programmed **Job Ticket** button. Proceed to step 3.
- Press OK to access the menu.

2 Press ▲ or ▼ to `Job Tickets`. Press OK to select.

3 Press ▲ or ▼ to the required folder. Press OK to select.

4 Press ▲ or ▼ to `All` folder. Press OK to select.

5 Press ▲ or ▼ to `Delete All`. Press OK to select.

6 Do one of the following:

- Press ▲ or ▼ to Yes. Press OK to select.
  The display shows a positive mini notice.
- Press ▲ or ▼ to No. Press OK to select.
  The radio returns to the previous screen.

6.11.17

Privacy

This feature helps to prevent eavesdropping by unauthorized users on a channel by the use of a software-based scrambling solution. The signaling and user identification portions of a transmission are not scrambled.

Your radio must have privacy enabled on the channel to send a privacy-enabled transmission, although this is not a necessary requirement for receiving a transmission. While on a privacy-enabled channel, the radio is still able to receive clear or unscrambled transmissions.

Some radio models may not offer Privacy feature, or may have a different configuration. Check with your dealer or system administrator for more information.

Your radio supports two types of privacy, but only one can be assigned to your radio. They are:

- Basic Privacy
- Enhanced Privacy

To unscramble a privacy-enabled call or data transmission, your radio must be programmed to have the same Privacy Key for Basic Privacy, or the same Key Value and Key ID for Enhanced Privacy as the transmitting radio.

If your radio receives a scrambled call that is of a different Privacy Key, or different Key Value and Key ID, you either hear a garbled transmission for Basic Privacy or nothing at all for Enhanced Privacy.

On a privacy-enabled channel, your radio is able to receive clear or unscrambled calls, depending on how your radio is programmed. In addition, your radio may play a warning tone or not, depending on how it is programmed.

The green LED lights up when the radio is transmitting, and blinks rapidly when the radio is receiving an ongoing privacy-enabled transmission.

NOTICE:
This feature is not applicable in Citizens Band channels that are in the same frequency.

6.11.17.1

Turning Privacy On or Off

Follow the procedure to turn privacy on or off on your radio.

1 Do one of the following:

- Press the programmed **Privacy** button. Skip the proceeding steps.
- Press OK to access the menu.

2 Press ▲ or ▼ to `Utilities`. Press OK to select.

3 Press ▲ or ▼ to `Radio Settings`. Press OK to select.

4 Press ▲ or ▼ to ***<required privacy>***.

Press OK to select.

- If privacy is on, display shows ✓ beside `Enabled`.
- If privacy is off, display shows empty box beside `Enabled`.

6.11.18

Response Inhibit

This feature helps prevent your radio from responding to any incoming transmissions.

NOTICE:
Contact your dealer to determine how your radio has been programmed.

If enabled, your radio does not generate any outgoing transmissions in respond to incoming transmissions, such as Radio Check, Call Alert, Radio Disable, Remote Monitor, Automatic Registration Service (ARS), Responding to Private Messages, and Sending GNSS location reports.

Your radio cannot receive Confirmed Private Calls when this feature is enabled. However, your radio is able to manually send transmission.

6.11.18.1

Turning Response Inhibit On or Off

Follow the procedure to enable or disable Response Inhibit on your radio.

Press the programmed **Response Inhibit** button.

If successful:

- A positive indicator tone sounds.
- The display shows a momentary positive mini notice.

If unsuccessful:

- A negative indicator tone sounds.
- The display shows a momentary negative mini notice.

6.11.19

Multi-Site Control

Your radio is able to search for sites and switch between sites when signal is weak or your radio is unable to detect any signal from the current site.

When the signal is strong, the radio remains on the current site.

This setting is applicable when your current radio channel is part of an IP Site Connect or Capacity Plus–Multi-Site configuration.

Your radio can perform either one of the following site searches:

- Automatic Site Search
- Manual Site Search

If the current channel is a multi-site channel with an attached roam list and is out of range, and the site is unlocked, your radio also performs automatic site search.

6.11.19.1

Enabling Manual Site Search

If the radio finds a new site, your radio shows the following indications:

- A positive tone sounds.

If the radio fails to find a new site, your radio shows the following indications:

- A negative tone sounds.

6.11.19.2

Site Lock On/Off

When toggled on, the radio searches the current site only. When toggled off, the radio searches other sites in addition to the current site.

Press the programmed **Site Lock** button.

If the **Site Lock** function is toggled on:

- You hear a positive indicator tone, indicating the radio has locked to the current site.
- The display shows `Site Locked`.

If the **Site Lock** function is toggled off:

- You hear a negative indicator tone, indicating the radio is unlocked.
- The display shows `Site Unlocked`.

6.11.19.3

Accessing Neighbor Sites List

This feature allows the user to check the adjacent sites list of the current home site. Follow the procedure to access the Neighbor Sites List:

1. Press OK to access the menu.
2. Press ▲ or ▼ to `Utilities`. Press OK to select.
3. Press ▲ or ▼ to `Radio Info`. Press OK to select.
4. Press ▲ or ▼ to `Neighbor Sites`. Press OK to select.

6.11.20

Security

This feature allows you to enable or disable any radio in the system.

For example, you may want to disable a stolen radio to prevent unauthorized users from using it, and enable the radio when it is recovered.

There are two ways to enable or disable a radio, with authentication and without authentication.

Authenticated Radio Disable is a purchasable feature. In Authenticated Radio Disable, verification is required when you enable or disable a radio. When your radio initiates this feature on a target radio with User Authentication, a passphrase is required. The passphrase is preprogrammed in the target radio through CPS.

You will not receive an acknowledgment if you press during Radio Enable or Radio Disable operation.

NOTICE:
Check with your dealer or system administrator for more information.

6.11.20.1

Disabling Radios

Follow the procedure to disable your radio.

1. Press the programmed **Radio Disable** button.
2. Press or to the required alias or ID.
3. Press OK to select. One of the following scenarios occurs:
   - The display shows a transitional mini notice, indicating the request is in progress. The green LED blinks.
   - A passphrase screen appears.

     Enter the passphrase. Press OK to proceed.
     - If the passphrase is correct, the display shows a transitional mini notice, indicating the request is in progress. The green LED lights up.
     - If the passphrase is incorrect, the display shows a negative mini notice, and returns to the previous screen.
4. Wait for acknowledgment.

   If successful:
   - A positive indicator tone sounds.
   - The display shows a positive mini notice.

   If unsuccessful:
   - A negative indicator tone sounds.
   - The display shows a negative mini notice.

6.11.20.2

Disabling Radios by Using the Contacts List

Follow the procedure to disable your radio by using the Contacts list.

1 Press OK to access the menu.

2 Press ▲ or ▼ to Contacts. Press OK to select.

3 Press ▲ or ▼ to the required alias or ID.

Press OK to select.

4 Press ▲ or ▼ to Radio Disable.

5 Press OK to select. One of the following scenarios occurs:

- The display shows a transitional mini notice, indicating the request is in progress. The green LED blinks.
- A passphrase screen appears.

  Enter the passphrase. Press OK to proceed.

  - If the passphrase is correct, the display shows a transitional mini notice, indicating the request is in progress. The green LED lights up.
  - If the passphrase is incorrect, the display shows a negative mini notice, and returns to the previous screen.

6 Wait for acknowledgment.

If successful:

- A positive indicator tone sounds.
- The display shows a positive mini notice.

If unsuccessful:

- A negative indicator tone sounds.
- The display shows a negative mini notice.

6.11.20.3

Disabling Radios by Using the Manual Dial

Follow the procedure to disable your radio by using the manual dial.

1. Press OK to access the menu.
2. Press ▲ or ▼ to `Contacts`. Press OK to select.
3. Press ▲ or ▼ to `Manual Dial`. Press OK to select.
4. Press ▲ or ▼ to `Radio Number`. Press OK to select.

   The first text line shows `Radio Number:`.
5. Enter the subscriber ID, and press OK to proceed.
6. Press ▲ or ▼ to `Radio Disable`.
7. Press OK to select. One of the following scenarios occurs:
   - The display shows a transitional mini notice, indicating the request is in progress. The green LED blinks.
   - A passphrase screen appears.

     Enter the passphrase. Press OK to proceed.
     - If the passphrase is correct, the display shows a transitional mini notice, indicating the request is in progress. The green LED lights up.
     - If the passphrase is incorrect, the display shows a negative mini notice, and returns to the previous screen.
8. Wait for acknowledgment.

   If successful:
   - A positive indicator tone sounds.
   - The display shows a positive mini notice.

If unsuccessful:

- A negative indicator tone sounds.
- The display shows a negative mini notice.

6.11.20.4

Enabling Radios

Follow the procedure to enable your radio.

1 Press the programmed **Radio Enable** button.

2 Press ▲ or ▼ to the required alias or ID.

3 Press OK to select. One of the following scenarios occurs:

- The display shows `Radio Enable` and the subscriber alias or ID. The green LED lights up.
- A passphrase screen appears.

  Enter the passphrase. Press OK to proceed.

  - If the passphrase is correct, the display shows a transitional mini notice, indicating the request is in progress. The green LED lights up.
  - If the passphrase is incorrect, the display shows a negative mini notice, and returns to the previous screen.

4 Wait for acknowledgment.

If successful:

- A positive indicator tone sounds.
- The display shows a positive mini notice.

If unsuccessful:

- A negative indicator tone sounds.
- The display shows a negative mini notice.

6.11.20.5

Enabling Radios by Using the Contacts List

Follow the procedure to enable your radio by using the Contacts list.

1 Press OK to access the menu.

2 Press ▲ or ▼ to Contacts. Press OK to select.

3 Press ▲ or ▼ to the required alias or ID.

Press OK to select.

4 Press ▲ or ▼ to Radio Enable.

5 Press OK to select. One of the following scenarios occurs:

- The green LED blinks. The display shows Radio Enable and the subscriber alias or ID. The green LED lights up.
- A passphrase screen appears.

  Enter the passphrase. Press OK to proceed.

  - If the passphrase is correct, the display shows a transitional mini notice, indicating the request is in progress. The green LED lights up.
  - If the passphrase is incorrect, the display shows a negative mini notice, and returns to the previous screen.

6 Wait for acknowledgment.

If successful:

- A positive indicator tone sounds.
- The display shows a positive mini notice.

If unsuccessful:

- A negative indicator tone sounds.
- The display shows a negative mini notice.

6.11.20.6

Enabling Radios by Using the Manual Dial

Follow the procedure to enable your radio by using the manual dial.

1 Press OK to access the menu.

2 Press ▲ or ▼ to `Contacts`. Press OK to select.

3 Press ▲ or ▼ to `Manual Dial`. Press OK to select.

4 Press ▲ or ▼ to `Private Call`. Press OK to select.

The first text line shows `Radio Number:`.

5 Enter the subscriber ID, and press OK to proceed.

6 Press ▲ or ▼ to `Radio Enable`.

7 Press OK to select. One of the following scenarios occurs:

- The green LED blinks. The display shows `Radio Enable` and the subscriber alias or ID. The green LED lights up.
- A passphrase screen appears.

  Enter the passphrase. Press OK to proceed.

  - If the passphrase is correct, the display shows a transitional mini notice, indicating the request is in progress. The green LED lights up.
  - If the passphrase is incorrect, the display shows a negative mini notice, and returns to the previous screen.

8 Wait for acknowledgment.

If successful:

- A positive indicator tone sounds.
- The display shows a positive mini notice.

If unsuccessful:

- A negative indicator tone sounds.
- The display shows a negative mini notice.

6.11.21

Lone Worker

This feature prompts an emergency to be raised if there is no user activity, such as any radio button press or channel selection, for a predefined time.

Following no user activity for a programmed duration, the radio pre-warns you using an audio indicator once the inactivity timer expires.

If there is still no acknowledgment by you before the predefined reminder timer expires, the radio initiates an Emergency Alarm.

Only one of the following Emergency Alarms is assigned to this feature:

- Emergency Alarm
- Emergency Alarm with Call
- Emergency Alarm with Voice to Follow

The radio remains in the emergency state, allowing voice messages to proceed until action is taken. See Emergency Operation on page 427 for more information on ways to exit Emergency.

NOTICE:
This feature is limited to radios with this function enabled. Check with your dealer or system administrator for more information.

6.11.22

Bluetooth®

This feature allows you to use your radio with a Bluetooth-enabled device (accessory) through a Bluetooth connection. Your radio supports both Motorola Solutions and Commercially available Off-The-Shelf (COTS) Bluetooth-enabled devices.

Bluetooth operates within a range of 10 m (32ft) line of sight. This is an unobstructed path between your radio and your Bluetooth-enabled device. For high degree of reliability, Motorola Solutions recommends to not separate the radio and the accessory.

At the fringe areas of reception, both voice and tone quality start to sound "garbled" or "broken". To correct this problem, position your radio and Bluetooth-enabled device closer to each other (within the 10 m defined range) to re-establish clear audio reception. The Bluetooth function of your radio has maximum power of 2.5 mW (4 dBm) at the 10 m range.

Your radio can support up to three simultaneous Bluetooth connections with Bluetooth-enabled devices of unique types. For example, a headset, a scanner, a sensor device, and a PTT-Only Device (POD).

Refer to the user manual of your respective Bluetooth-enabled device for more details on the full capabilities of your Bluetooth-enabled device.

NOTICE:
If disabled through CPS, all Bluetooth-related features are disabled and the Bluetooth device database is erased.

6.11.22.1

Turning Bluetooth On and Off

Follow the procedure to turn Bluetooth on and off.

1. Press OK to access the menu.
2. Press ▲ or ▼ to `Bluetooth`. Press OK to select.
3. Press ▲ or ▼ to `My Status`. Press OK to select.

   The display shows `On` and `Off`. The current status is indicated by a ✓ .
4. Do one of the following:
   - Press ▲ or ▼ to `On`. Press OK to select. The display shows ✓ beside `On`.
   - Press ▲ or ▼ to `Off`. Press OK to select. The display shows ✓ beside `Off`.

6.11.22.2

Connecting to Bluetooth Devices

Follow the procedure to connect to Bluetooth devices.

Turn on your Bluetooth-enabled device and place it in pairing mode.

1. Press OK to access the menu.

2 Press ▲ or ▼ to `Bluetooth`. Press OK to select.

3 Press ▲ or ▼ to `Devices`. Press OK to select.

4 Do one of the following:

- Press ▲ or ▼ to the required device. Press OK to select.
- Press ▲ or ▼ to `Find Devices` to locate available devices. Press ▲ or ▼ to the required device. Press OK to select.

5 Press ▲ or ▼ to `Connect`. Press OK to select.

Your Bluetooth-enabled device may require additional steps to complete the pairing. Refer to the user manual of your Bluetooth-enabled device.

The display shows `Connecting to <Device>`.

Wait for acknowledgment.
If successful:

- A positive indicator tone sounds.
- The display shows `<Device> Connected` and the **Bluetooth Connected** icon.
- The display shows ✓ beside the connected device.

If unsuccessful:

- A negative indicator tone sounds.
- The display shows `Connecting Failed`.

NOTICE:
If pin code is required, see Accessing the Radio by Using Password on page 188.

6.11.22.3

Connecting to Bluetooth Devices in Discoverable Mode

Follow the procedure to connect to Bluetooth devices in discoverable mode.

Turn on your Bluetooth-enabled device and place it in pairing mode.

1. Press OK to access the menu.
2. Press ▲ or ▼ to `Bluetooth`. Press OK to select.
3. Press ▲ or ▼ to `Find Me`. Press OK to select. The radio can now be found by other Bluetooth-enabled devices for a programmed duration. This is called Discoverable Mode.

Wait for acknowledgment.
If successful:

- A positive indicator tone sounds.
- The display shows `<Device> Connected` and the **Bluetooth Connected** icon.
- The display shows ✓ beside the connected device.

If unsuccessful:

- A negative indicator tone sounds.
- The display shows `Connecting Failed`.

6.11.22.4

Disconnecting from Bluetooth Devices

Follow the procedure to disconnect from Bluetooth devices.

1. Press OK to access the menu.
2. Press ▲ or ▼ to `Bluetooth`. Press OK to select.
3. Press ▲ or ▼ to `Devices`. Press OK to select.

4 Press ▲ or ▼ to the required device. Press OK to select.

5 Press ▲ or ▼ to `Disconnect`. Press OK to select.

The display shows `Disconnecting from <Device>`.

NOTICE:
Your Bluetooth-enabled device may require additional steps to disconnect. Refer to respective user manuals of any Bluetooth-enabled devices.

Wait for acknowledgment.

- A tone sounds.
- The display shows `<Device> Disconnected` and the **Bluetooth Connected** icon disappears.
- The ✓ disappears beside the connected device.

6.11.22.5

Switching Audio Route between Internal Radio Speaker and Bluetooth Device

Follow the procedure to toggle audio routing between internal radio speaker and external Bluetooth device.

Press the programmed **Bluetooth Audio Switch** button.

The display shows one of the following results:

- A tone sounds. The display shows `Route Audio to Radio`.
- A tone sounds. The display shows `Route Audio to Bluetooth`.

6.11.22.6

Viewing Device Details

Follow the procedure to view device details on your radio.

1 Press OK to access the menu.

2 Press ▲ or ▼ to `Bluetooth`. Press OK to select.

3 Press ▲ or ▼ to `Devices`. Press OK to select.

4 Press ▲ or ▼ to the required device. Press OK to select.

5 Press ▲ or ▼ to `View Details`. Press OK to select.

6.11.22.7

Deleting Device Name

You can remove a disconnected device from the list of Bluetooth-enabled devices.

1 Press OK to access the menu.

2 Press ▲ or ▼ to `Bluetooth`. Press OK to select.

3 Press ▲ or ▼ to `Devices`. Press OK to select.

4 Press ▲ or ▼ to the required device. Press OK to select.

5 Press ▲ or ▼ to `Delete`. Press OK to select. The display shows `Device Deleted`.

6.11.22.8

Bluetooth Mic Gain

This feature allows the user to control the microphone gain value of the connected Bluetooth-enabled device.

1 Press OK to access the menu.

2 Press ▲ or ▼ to `Bluetooth`. Press OK to select.

3 Press ▲ or ▼ to `BT Mic Gain`. Press OK to select.

4 Press ▲ or ▼ to the BT Mic Gain type and the current values. Press OK to select. You can edit the values here.

5 Press ▲ or ▼ to increase or to decrease values. Press OK to select.

6.11.23

Indoor Location

NOTICE:
Indoor Location feature is applicable for models with the latest software and hardware. Check with your dealer or system administrator for more information.

Indoor Location is use to keep track of the location of radio users. When Indoor Location is activated, the radio is in a limited discoverable mode. Dedicated beacons are used to locate the radio and determine its position.

6.11.23.1

Turning Indoor Location On or Off

You can turn on or turn off Indoor Location by performing one of the following actions.

- Access this feature through the menu.

  a. Press OK to access the menu.

  b. Press ▲ or ▼ to `Bluetooth` and press OK to select.

  c. Press ▲ or ▼ to `Indoor Location` and press OK to select.

  d. Press OK to turn on Indoor Location.

  The display shows `Indoor Location On`. You hear a positive indicator tone.
  One of the following scenarios occurs.

- If successful, the Indoor Location Available icon appears on the Home screen display.
- If unsuccessful, the display shows `Turning On Failed`. You hear a negative indicator tone.

e. Press OK to turn off Indoor Location.

The display shows `Indoor Location Off`. You hear a positive indicator tone.
One of the following scenarios occurs.

- If successful, the Indoor Location Available icon disappears on the Home screen display.
- If unsuccessful, the display shows `Turning Off Failed`. You hear a negative indicator tone.

- Access this feature by using the programmed button.

a. Long press the programmed **Indoor Location** button to turn on Indoor Location.

The display shows `Indoor Location On`. You hear a positive indicator tone.
One of the following scenarios occurs.

- If successful, the Indoor Location Available icon appears on the Home screen display.
- If unsuccessful, the display shows `Turning On Failed`. If unsuccessful, you hear a negative indicator tone.

b. Press the programmed **Indoor Location** button to turn off Indoor Location.

The display shows `Indoor Location Off`. You hear a positive indicator tone.
One of the following scenarios occurs.

- If successful, the Indoor Location Available icon disappears on the Home screen display.
- If unsuccessful, the display shows `Turning Off Failed`. If unsuccessful, you hear a negative indicator tone.

6.11.23.2

Accessing Indoor Location Beacons Information

Follow the procedure to access Indoor Location beacons information.

1. Press OK to access the menu.
2. Press ▲ or ▼ to `Bluetooth` and press OK to select.
3. Press ▲ or ▼ to `Indoor Location` and press OK to select.
4. Press ▲ or ▼ to `Beacons` and press OK to select.

The display shows the beacons information.

6.11.24

Notification List

Your radio has a Notification list that collects all your unread events on the channel, such as unread text messages, telemetry messages, missed calls, and call alerts.

The display shows the **Notification** icon when the Notification list has one or more events.

The list supports a maximum of 40 unread events. When the list is full, the next event automatically replaces the oldest event. After the events are read, they are removed from the Notification list.

For text messages, missed calls, and call alert events, the maximum number of notifications are 30 text messages and 10 missed calls or call alerts. This maximum number depends on individual feature (job tickets or text messages or missed calls or call alerts) list capability.

6.11.24.1

Accessing Notification List

Follow the procedure to access the Notification list on your radio.

1 Press OK to access the menu.

2 Press ▲ or ▼ to `Notification`. Press OK to select.

3 Press ▲ or ▼ to the required event. Press OK to select.

Long press ⮌ to return to the Home screen.

6.11.25

Auto-Range Transponder System

The Auto-Range Transponder System (ARTS) is an analog-only feature designed to inform you when your radio is out-of-range of other ARTS-equipped radios.

ARTS-equipped radios transmit or receive signals periodically to confirm that they are within range of each other.

Your radio provides indications of states as follows:

First-Time Alert

A tone sounds.

The display shows channel alias and `In Range`.

ARTS-in-Range Alert

A tone sounds, if programmed.

The display shows channel alias and `In Range`.

ARTS-Out-of-Range Alert

A tone sounds. The red LED rapidly blinks.

The display shows `Out of Range` alternating with the Home screen.

NOTICE:
Check with your dealer or system administrator for more information.

6.11.26

Over-the-Air Programming

Your dealer can remotely update your radio through Over-the-Air Programming (OTAP) without any physical connection. Additionally, some settings can also be configured by using OTAP.

When your radio undergoes OTAP, the green LED blinks.

When your radio receives high volume data:

- The display shows the **High Volume Data** icon.
- The channel becomes busy.
- A negative tone sounds if you press the **PTT** button.

When OTAP completes, depending on the configuration:

- A tone sounds. The display shows `Updating Restarting`. Your radio restarts by powering off and on again.
- You can select `Restart Now` or `Postpone`. When you select `Postpone`, your radio returns to the previous screen. The display shows the **OTAP Delay Timer** icon until the automatic restart occurs.

When your radio powers up after automatic restart:

- If successful, the display shows `Sw Update Completed`.
- If the program update is unsuccessful, a tone sounds, the red LED blinks once, and the display shows `Sw Update Failed`.

NOTICE:
If the programming update is unsuccessful, the software update failure indications appear every time you turn on your radio. Contact your dealer to reprogram your radio with the latest software to eliminate the software update failure indications.

See Checking Software Update Information on page 224 for the updated software version.

6.11.27
Transmit Inhibit

Transmit inhibit feature allow users to block all transmission from the radio.

NOTICE:
Bluetooth and Wi-Fi features are available in Transmit Inhibit mode.

6.11.27.1
Enabling Transmit Inhibit

Follow the procedure to enable Transmit Inhibit.

Perform one of the following actions:

- Press ▲ or ▼ to `Tx Inhibit` and press OK to select.
- Press the **Transmit Inhibit** programmable button.

- A positive indicator tone sounds.

- The display shows `Tx Inhibit On`.

NOTICE:
The status of the Transmit Inhibit does not change after the radio powers up.

6.11.27.2

Disabling Transmit Inhibit

Follow the procedure to disable Transmit Inhibit.

Perform one of the following actions:

- Press ▲ or ▼ to `Tx Inhibit` and press OK to select.
- Press the **Transmit Inhibit** programmable button.

- A negative indicator tone sounds. Transmission is back to normal operation.
- The display shows `Tx Inhibit Off`.

6.11.28

Selecting Third-Party Peripherals Connection Modes

Follow the procedure to select one of the following third-party peripherals connection modes:

- Motorola Solutions
- PC and Audio
- Data Accessory
- Telemetry
- Generic

1. Press OK to access the menu.
2. Press ▲ or ▼ to `Utilities`. Press OK to select.
3. Press ▲ or ▼ to `Radio Settings`. Press OK to select.
4. Press ▲ or ▼ to `Cable Type`. Press OK to select.

5 Press ▲ or ▼ to the required connection mode. Press OK to select.

The display shows the selected connection mode. The screen returns to the previous menu.

6.11.29

Received Signal Strength Indicator

This feature allows you to view the Received Signal Strength Indicator (RSSI) values.

The display shows the **RSSI** icon at the top right corner. See Display Icons for more information on the **RSSI** icon.

6.11.29.1

Viewing RSSI Values

Attach the 4-Way Navigation Keypad Microphone (Motorola Solutions part number RMN5127_) to your radio.

At the home screen, using the 4-Way Navigation Keypad Microphone, press ◀ three times and immediately press ▶ three times.

The display shows the current RSSI values.

To return to the home screen, press and hold ↩⌂ .

6.11.30

Password Lock

You can set a password to restrict access to your radio. Each time you turn on your radio, you are asked to enter the password.

Your radio supports a 4-digit password input.

You can also use a keypad microphone to enter the password.

Your radio is unable to receive calls in locked state.

6.11.30.1

Accessing the Radio by Using Password

Turn on your radio.

1 Enter the four-digit password.

   a Use a keypad microphone.

   b To edit the numeric value of each digit, press ▲ or ▼. To enter and move to the next digit, press OK.

   NOTICE:
   The use of **Emergency** footswitch cancels password input to access the radio.

2 Press OK to confirm the password.

If you enter the password correctly, the radio powers up.

If you enter the wrong password after the first and second attempt, your radio shows the following indications:

- A continuous tone sounds.
- The display shows `Wrong Password`.

Repeat step 1.

If you enter the wrong password after the third attempt, your radio shows the following indications:

- A tone sounds.
- The yellow LED double blinks.
- The display shows `Wrong Password` and then, `Radio Locked`.
- Your radio enters into locked state for 15 minutes.

NOTICE:
In locked state, your radio responds to inputs from the **On/Off/Volume Control Knob** and programmed **Backlight** button only.

Wait for the 15-minute locked state timer to end and then repeat step 1.

NOTICE:
If you turn off and turn your radio on again, the 15-minute timer restarts.

6.11.30.2

Unlocking Radios in Locked State

Your radio is unable to receive calls in locked state. Follow the procedure to unlock your radio in locked state.

Do one of the following:

- If the radio is powered on, wait for 15 minutes and then repeat the steps in Accessing the Radio by Using Password on page 188 to access the radio.
- If the radio is powered off, power up the radio. Your radio restarts the 15-minute timer for locked state. A tone sounds. The yellow LED double blinks. The display shows `Radio Locked`.

  Wait for 15 minutes and then repeat the steps in Accessing the Radio by Using Password on page 188 to access the radio.

6.11.30.3

Turning Password Lock On or Off

Follow the procedure to turn password lock on or off on your radio.

1. Press OK to access the menu.
2. Press ▲ or ▼ to `Utilities`. Press OK to select.
3. Press ▲ or ▼ to `Radio Settings`. Press OK to select.
4. Press ▲ or ▼ to `Passwd Lock`. Press OK to select.
5. Enter the current four-digit password.
   - Use a keypad microphone.
   - Press ▲ or ▼ to edit the numeric value of each digit, and press OK to enter and move to the next digit.
     A positive indicator tone sounds for every digit pressed.
6. Press OK to enter the password.

   If the password is incorrect, the display shows `Wrong Password` and automatically returns to the previous menu.
7. Do one of the following:

- Press ▲ or ▼ to Turn On. Press OK to select.
  The display shows ✓ beside Turn On.
- Press ▲ or ▼ to Turn Off. Press OK to select.
  The display shows ✓ beside Turn Off.

6.11.30.4

Changing Passwords

Follow the procedure to change passwords on your radio.

1 Press OK to access the menu.

2 Press ▲ or ▼ to Utilities. Press OK to select.

3 Press ▲ or ▼ to Radio Settings. Press OK to select.

4 Press ▲ or ▼ to Passwd Lock. Press OK to select.

5 Enter the current four-digit password, and press OK to proceed.

If the password is incorrect, the display shows Wrong Password and automatically returns to the previous menu.

6 Press ▲ or ▼ to Change PWD. Press OK to select.

7 Enter a new four-digit password, and press OK to proceed.

8 Re-enter the new four-digit password, and press OK to proceed.

If successful, the display shows Password Changed. If unsuccessful, the display shows Passwords Do Not Match.

The screen automatically returns to the previous menu.

6.11.31

Front Panel Configuration

You are able to customize certain feature parameters in Front Panel Configuration (FPC) to enhance the use of your radio.

6.11.31.1

Entering Front Panel Configuration Mode

Long press at any time to return to the Home screen.

1 Press OK to access the menu.

2 Press or to Utilities. Press OK to select.

3 Press or to Program Radio. Press OK to select.

6.11.31.2

Editing FPP Mode Parameters

Use the following buttons as required while navigating through the feature parameters.

- , – Scroll through options, increase/decrease values, or navigate vertically.
- OK – Select the option or enter a sub-menu.
- – Short-press to return to previous menu or to exit the selection screen. Long-press to return to Home screen.

6.11.32

Wi-Fi Operation

This feature allows you to set up and connect to a Wi-Fi network. Wi-Fi supports updates for radio firmware,

codeplug, and resources such as language packs and voice announcement.

NOTICE:
This feature is applicable to XiR M8668i/CM7668i only.

Wi-Fi® is a registered trademark of Wi-Fi Alliance®.

Your radio supports WEP/WPA/WPA2-Personal and WPA/WPA2-Enterprise Wi-Fi networks.

WEP/WPA/WPA2-Personal Wi-Fi network
Uses pre-shared key (password) based authentication.

Pre-shared key can be entered by using the menu or CPS/RM.

WPA/WPA2-Enterprise Wi-Fi network
Uses certificate-based authentication.

Your radio must be pre-configured with a certificate.

NOTICE:
Check with your dealer or system administrator to connect to WPA/WPA2-Enterprise Wi-Fi network.

The programmed **Wi-Fi On or Off** button is assigned by your dealer or system administrator. Check with your dealer or system administrator to determine how your radio has been programmed.

Voice Announcements for the programmed **Wi-Fi On or Off** button can be customized through CPS according to user requirements. Check with your dealer or system administrator for more information.

NOTICE:
You can turn on or turn off Wi-Fi remotely by using a designated radio (see Turning Wi-Fi On or Off Remotely by Using a Designated Radio (Individual Control) on page 196 and Turning Wi-Fi On or Off Remotely by Using a Designated Radio (Group Control) on page 196). Check with your dealer or system administrator for more information.

6.11.32.1

Turning Wi-Fi On or Off

1 Press the programmed **Wi-Fi On or Off** button.
Voice Announcement sounds Turning On Wi-Fi or Turning Off Wi-Fi.

2 Access this feature using the menu.

a Press OK to access the menu.

b Press ▲ or ▼ to `WiFi` and press OK to select.

c Press ▲ or ▼ to `WiFi On` and press OK to select.

d Press OK to turn on/off Wi-Fi.

If Wi-Fi is on, the display shows ✓ beside `Enabled`.

If Wi-Fi is off, the ✓ disappears from beside `Enabled`.

6.11.32.2

Turning Wi-Fi On or Off Remotely by Using a Designated Radio (Individual Control)

You can turn Wi-Fi on or off remotely in Individual Control (One to One).

NOTICE:
Only radio with specific CPS setting supports this function, check with your dealer or system administrator for more information.

1 Do one of the following:

- Long press the programmable button. Use the keypad to enter the ID and press OK to select. Proceed to step 3.
- Press OK to access the menu.

2 Press ▲ or ▼ to `Contacts` and press OK to select.

3 Press ▲ or ▼ to `WiFi Control` and press OK to select.

4 Press ▲ or ▼ to select `On` or `Off`.

5 Press OK to select.

If successful, the display shows a positive mini notice.

If unsuccessful, the display shows a negative mini notice.

6.11.32.3

Turning Wi-Fi On or Off Remotely by Using a Designated Radio (Group Control)

You can turn Wi-Fi on or off remotely in Group Control (One to Many).

NOTICE:
Only radio with specific CPS setting supports this function, check with your dealer or system administrator for more information.

1. Press OK to access the menu.
2. Press ▲ or ▼ to `Contacts` and press OK to select.
3. Press ▲ or ▼ to select the required subscriber alias or ID.
4. Press ▲ or ▼ to `WiFi Control` and press OK to select.
5. Press ▲ or ▼ to select `On` or `Off`.
6. Press OK to select.

If successful, the display shows `Sent Successfully`.

If unsuccessful, the display shows a negative mini notice.

6.11.32.4

Connecting to a Network Access Point

When you turn on Wi-Fi, the radio scans and connects to a network access point.

NOTICE:
You can also connect to a network access point using the menu.

The WPA-Enterprise Wi-Fi network access points are pre-configured. Check with your dealer or system administrator to determine how your radio has been programmed.

1 Press OK to access the menu.

2 Press ▲ or ▼ to `WiFi` and press OK to select.

3 Press ▲ or ▼ to `Networks` and press OK to select.

4 Press ▲ or ▼ to a network access point and press OK to select.

NOTICE:
For WPA-Enterprise Wi-Fi, if a network access point is not preconfigured, the `Connect` option is not available.

5 Press ▲ or ▼ to `Connect` and press OK to select.

6 For WPA-Personal Wi-Fi, enter the password and press OK .

7 For WPA-Enterprise Wi-Fi, password is configured by using RM.

If the preconfigured password is correct, your radio automatically connects to the selected network access point.

If the preconfigured password is incorrect, the display shows `Authentication Failure`, and automatically returns to the previous menu.

If the connection is successful, the radio displays a notice and the network access point is saved into the profile list.

If the connection is unsuccessful, the radio displays shows the failure notice screen momentarily and automatically returns to the previous menu.

6.11.32.5

Checking Wi-Fi Connection Status

Press the programmed **Wi-Fi Status Query** button for the connection status by using Voice Announcement. Voice

Announcement sounds Wi-Fi is Off, Wi-Fi is On but No Connection, or Wi-Fi is On with Connection.

- The display shows `WiFi Off` when the Wi-Fi is turned off.
- The display shows `WiFi On, Connected` when the radio is connected to a network.
- The display shows `WiFi On, Disconnected` when the Wi-Fi is turned on but the radio is not connected to any network.

  Voice Announcements for the Wi-Fi status query results can be customized through CPS according to user requirements. Check with your dealer or system administrator for more information.

  NOTICE:
  The programmed **Wi-Fi Status Query** button is assigned by your dealer or system administrator. Check with your dealer or system administrator to determine how your radio has been programmed.

6.11.32.6

Refreshing the Network List

- Perform the following actions to refresh the network list through the menu.

  a. Press OK to access the menu.

  b. Press ▲ or ▼ to `WiFi` and press OK to select.

  c. Press ▲ or ▼ to `Networks` and press OK to select.

  When you enter the Networks menu, the radio automatically refreshes the network list.

- If you are already in the Networks menu, perform the following action to refresh the network list.

  Press ▲ or ▼ to `Refresh` and press OK to select.

  The radio refreshes and displays the latest network list.

6.11.32.7

Adding a Network

NOTICE:
This task is not applicable to WPA-Enterprise Wi-Fi networks.

If a preferred network is not in the available network list, perform the following actions to add a network.

1. Press OK to access the menu.
2. Press ▲ or ▼ to WiFi and press OK to select.
3. Press ▲ or ▼ to Networks and press OK to select.
4. Press ▲ or ▼ to Add Network and press OK to select.
5. Enter the Service Set Identifier (SSID) and press OK .
6. Press ▲ or ▼ to Open and press OK to select.
7. Enter the password and press OK .

   The radio displays a positive mini notice to indicate that the network is successfully saved.

6.11.32.8

Viewing Details of Network Access Points

You can view details of network access points.

1. Press OK to access the menu.
2. Press ▲ or ▼ to WiFi and press OK to select.
3. Press ▲ or ▼ to Networks and press OK to select.

4 Press ▲ or ▼ to a network access point and press OK to select.

5 Press ▲ or ▼ to `View Details` and press OK to select.

NOTICE:
WPA-Personal Wi-Fi and WPA-Enterprise Wi-Fi display different details of Network Access Points.

WPA-Personal Wi-Fi

For a connected network access point, your radio displays Service Set Identifier (SSID), Security Mode, Media Access Control (MAC) address, and Internet Protocol (IP) address.

For a non-connected network access point, your radio displays SSID and Security Mode.

WPA-Enterprise Wi-Fi

For a connected network access point, your radio displays SSID, Security Mode, Identity, Extended Authentication Protocol (EAP) Method, Phase 2 Authentication, Cert Name, MAC address, IP address, Gateway, DNS1, and DNS2.

For a non-connected network access point, your radio displays SSID, Security Mode, Identity, EAP Method, Phase 2 Authentication, and Cert Name.

6.11.32.9
Removing Network Access Points

NOTICE:
This task is not applicable to Enterprise Wi-Fi networks.

Perform the following actions to remove network access points from the profile list.

1 Press OK to access the menu.

2 Press ▲ or ▼ to `WiFi` and press OK to select.

3 Press ▲ or ▼ to `Networks` and press OK to select.

4 Press ▲ or ▼ to the selected network access point and press OK to select.

5 Press ▲ or ▼ to `Remove` and press OK to select.

6 Press ▲ or ▼ to `Yes` and press OK to select.

The radio displays a positive mini notice to indicate that the selected network access point is successfully removed.

6.12

Utilities

This chapter explains the operations of the utility functions available in your radio.

6.12.1

Squelch Levels

You can adjust the squelch level to filter out unwanted calls with low signal strength or channels with noise higher than normal background.

Normal

This is the default setting.

Tight

This setting filters out unwanted calls and/or background noise. Calls from remote locations may also be filtered out.

NOTICE:
This feature is not applicable in Citizens Band channels that are in the same frequency.

6.12.1.1

Setting Squelch Levels

Follow the procedure to set the squelch levels on your radio.

1 Do one of the following:

- Press the programmed **Squelch** button. Skip the following steps.

- Press OK to access the menu.

2 Press ▲ or ▼ to Utilities. Press OK to select.

3 Press ▲ or ▼ to Radio Settings. Press OK to select.

4 Press ▲ or ▼ to Squelch. Press OK to select.

5 Do one of the following:

- Press ▲ or ▼ to Normal. Press OK to select.
  The display shows ✓ beside Normal.
- Press ▲ or ▼ to Tight. Press OK to select.
  The display shows ✓ beside Tight.

The screen automatically returns to the previous menu.

6.12.2

Power Levels

You can customize the power setting to high or low for each channel.

High
This enables communication with radios located at a considerable distance from you.

Low
This enables communication with radios in closer proximity.

NOTICE:
This feature is not applicable in Citizens Band channels that are in the same frequency.

6.12.2.1

Setting Power Levels

Follow the procedure to set the power levels on your radio.

1 Do one of the following:

- Press the programmed **Power Level** button. Skip the steps below.

- Press OK to access the menu.

2 Press ▲ or ▼ to Utilities. Press OK to select.

3 Press ▲ or ▼ to Radio Settings. Press OK to select.

4 Press ▲ or ▼ to Power. Press OK to select.

5 Do one of the following:

- Press ▲ or ▼ to High. Press OK to select.
  The display shows ✓ beside High.
- Press ▲ or ▼ to Low. Press OK to select.
  The display shows ✓ beside Low.

6 Long press ⏎ to return to the Home screen.

6.12.3

Turning Radio Tones/Alerts On or Off

You can enable and disable all radio tones and alerts, if needed, except for incoming Emergency alert tone . Follow the procedure to turn tones and alerts on or off on your radio.

1 Do one of the following:

- Press the programmed **Tones/Alerts** button. Skip the following steps.
- Press OK to access the menu.

2 Press ▲ or ▼ to Utilities. Press OK to select.

3 Press ▲ or ▼ to Radio Settings. Press OK to select.

4 Press ▲ or ▼ to Tones/Alerts. Press OK to select.

5 Press ▲ or ▼ to All Tones. Press OK to select.

6 Press OK to enable or disable all tones and alerts. The display shows one of the following results:

- If enabled, ✓ appears beside Enabled.
- If disabled, ✓ disappears beside Enabled.

6.12.4

Turning Keypad Tones On or Off

Follow the procedure to turn keypad tones on or off on your radio.

1 Press OK to access the menu.

2 Press ▲ or ▼ to Utilities. Press OK to select.

3 Press ▲ or ▼ to Radio Settings. Press OK to select.

4 Press ▲ or ▼ to Tones/Alerts. Press OK to select.

5 Press ▲ or ▼ to Keypad Tones. Press OK to select.

6 Press OK to enable or disable keypad tones. The display shows one of the following results:

- If enabled, ✓ appears beside Enabled.
- If disabled, ✓ disappears beside Enabled.

6.12.5

Setting Tones/Alerts Volume Offset Levels

This feature adjusts the volume of the tones or alerts, allowing it to be higher or lower than the voice volume. Follow the procedure to set the tones and alerts volume offset levels on your radio.

1 Press OK to access the menu.

2 Press ▲ or ▼ to Utilities. Press OK to select.

3 Press ▲ or ▼ to Radio Settings. Press OK to select.

4 Press ▲ or ▼ to Tones/Alerts. Press OK to select.

5 Press ▲ or ▼ to Vol. Offset. Press OK to select.

6 Press ▲ or ▼ to the required volume offset level.

A feedback tone sounds with each corresponding volume offset level.

7 Do one of the following:

- Press OK to select. The required volume offset level is saved.
- Press ⮌ to exit. The changes are discarded.

6.12.6

Turning Talk Permit Tone On or Off

Follow the procedure to turn Talk Permit Tone on or off on your radio.

1 Press OK to access the menu.

2 Press ▲ or ▼ to Utilities. Press OK to select.

3 Press ▲ or ▼ to Radio Settings. Press OK to select.

4 Press ▲ or ▼ to Tones/Alerts. Press OK to select.

5 Press ▲ or ▼ to Talk Permit. Press OK to select.

6 Press OK to enable or disable the Talk Permit Tone.

The display shows one of the following results:

- If enabled, ✓ appears beside Enabled.
- If disabled, ✓ disappears beside Enabled.

6.12.7

Turning Power Up Tone On or Off

Follow the procedure to turn Power Up Tone on or off on your radio.

1 Press OK to access the menu.

2 Press ▲ or ▼ to Utilities. Press OK to select.

3 Press ▲ or ▼ to Radio Settings. Press OK to select.

4 Press ▲ or ▼ to Tones/Alerts. Press OK to select.

5 Press ▲ or ▼ to Power Up. Press OK to select.

6 Press OK to enable or disable the Power Up Tone. The display shows one of the following results:

- If enabled, ✓ appears beside Enabled.
- If disabled, ✓ disappears beside Enabled.

6.12.8

Setting Text Message Alert Tones

You can customize the text message alert tone to Momentary or Repetitive for each entry in the Contacts list. Follow the procedure to set the text message alert tones on your radio.

1 Press OK to access the menu.

2 Press ▲ or ▼ to Contacts. Press OK to select.

3 Press ▲ or ▼ to the required alias or ID.

Press OK to select.

4 Press ▲ or ▼ to Message Alert. Press OK to select.

5 Do one of the following:

- Press ▲ or ▼ to Momentary. Press OK to select.
  The display shows ✓ beside Momentary.
- Press ▲ or ▼ to Repetitive. Press OK to select.
  The display shows ✓ beside Repetitive.

6.12.9

Changing Display Modes

You can change the display mode of the radio between Day or Night, as needed. This feature affects the color palette of the display. Follow the procedure to change the display mode of your radio.

1 Do one of the following:

- Press the programmed **Display Mode** button. Skip the following steps.
- Press OK to access the menu.

2 Press ▲ or ▼ to Utilities. Press OK to select.

3 Press ▲ or ▼ to Radio Settings. Press OK to select.

4 Press ▲ or ▼ to Display. Press OK to select.

The display shows Day Mode and Night Mode.

5 Press ▲ or ▼ to the required setting. Press OK to select.

The display shows ✓ beside the selected setting.

6.12.10

Adjusting Display Brightness

Follow the procedure to adjust the display brightness on your radio. Display brightness cannot be adjusted when Auto Brightness is enabled.

1 Do one of the following:

- Press the programmed **Brightness** button. Skip the following steps.
- Press OK to access the menu.

2 Press ▲ or ▼ to `Utilities`. Press OK to select.

3 Press ▲ or ▼ to `Radio Settings`. Press OK to select.

4 Press ▲ or ▼ to `Brightness`. Press OK to select.

The display shows the progress bar.

5 Press ▲ or ▼ to decrease or increase the display brightness. Press OK to select.

The setting value is varied from 1 to 8.

6.12.11

Turning Horns/Lights On or Off

Your radio is able to notify you of an incoming call through the horns and lights feature. When activated, an incoming call sounds the horn and turns on the lights of your vehicle. This feature needs to be installed through your radio rear accessory connector by your dealer. Follow the procedure to turn all horns and lights on or off on your radio.

1 Do one of the following:

- Press the programmed **Horns/Lights** button. Skip the steps below.
- Press OK to access the menu.

2 Press ▲ or ▼ to `Utilities`. Press OK to select.

3 Press ▲ or ▼ to `Radio Settings`. Press OK to select.

4 Press ▲ or ▼ to `Horns/Lights`. Press OK to select.

5 Press OK to enable or disable Horns/Lights. The display shows one of the following results:

- If enabled, ✓ appears beside `Enabled`.
- If disabled, ✓ disappears beside `Enabled`.

6.12.12

Turning LED Indicators On or Off

Follow the procedure to turn the LED indicators on or off on your radio.

1 Press OK to access the menu.

2 Press ▲ or ▼ to `Utilities`. Press OK to select.

3 Press ▲ or ▼ to `Radio Settings`. Press OK to select.

4 Press ▲ or ▼ to `LED Indicator`. Press OK to select.

5 Press OK to enable or disable the LED indicator.

The display shows one of the following results:

- If enabled, ✓ appears beside `Enabled`.
- If disabled, ✓ disappears beside `Enabled`.

6.12.13

Turning Public Address System On or Off

Follow the procedure to enable or disable the internal public address (PA) system of your radio.

1 Do one of the following:
- Press the programmed **Public Address** button. Skip the following steps.
- Press OK to access the menu.

2 Press ▲ or ▼ to `Utilities`. Press OK to select.

3 Press ▲ or ▼ to `Radio Settings`. Press OK to select.

4 Press ▲ or ▼ to `Public Address`. Press OK to select.

5 Press OK to enable or disable Public Address.
- If enabled, ✓ appears beside `Enabled`.
- If disabled, ✓ disappears beside `Enabled`.

6.12.14

Turning External Public Address System On or Off

Follow the procedure to enable or disable the external public address (PA) system of your radio.

1 Do one of the following:
- Press the programmed **Ext Public Address** button. Skip the following steps.
- Press OK to access the menu.

2 Press ▲ or ▼ to `Utilities`. Press OK to select.

3 Press ▲ or ▼ to Radio Settings. Press OK to select.

4 Press ▲ or ▼ to External Public Address. Press OK to select.

5 Press OK to enable or disable external public address.

- If enabled, ✓ appears beside Enabled.
- If disabled, ✓ disappears beside Enabled.

6.12.15

Turning Introduction Screen On or Off

You can enable and disable the Introduction Screen by following the procedure.

1 Press OK to access the menu.

2 Press ▲ or ▼ to Utilities. Press OK to select.

3 Press ▲ or ▼ to Radio Settings. Press OK to select.

4 Press ▲ or ▼ to Display. Press OK to select.

5 Press ▲ or ▼ to Intro Screen. Press OK to select.

6 Press OK to enable or disable the Introduction Screen.

The display shows one of the following results:

- If enabled, ✓ appears beside Enabled.
- If disabled, ✓ disappears beside Enabled.

6.12.16

Setting Languages

Follow the procedure to set the languages on your radio.

1. Press OK to access the menu.
2. Press ▲ or ▼ to `Utilities`. Press OK to select.
3. Press ▲ or ▼ to `Radio Settings`. Press OK to select.
4. Press ▲ or ▼ to `Languages`. Press OK to select.
5. Press ▲ or ▼ to the required language. Press OK to select.

   The display shows ✓ beside the selected language.

6.12.17

Identifying Cable Type

Do the following steps to select the type of cable your radio uses.

1. Press OK to access the menu.
2. Press ▲ or ▼ to `Utilities`. Press OK to select.
3. Press ▲ or ▼ to `Radio Settings`. Press OK to select.
4. Press ▲ or ▼ to `Cable Type`. Press OK to select.
5. The current cable type is indicated by a ✓ .

6.12.18

Voice Operating Transmission

The Voice Operating Transmission (VOX) allows you to initiate a hands-free voice-activated call on a programmed channel. The radio automatically transmits, for a programmed period, whenever the microphone on the VOX-capable accessory detects voice.

NOTICE:
This feature is not applicable in Citizens Band channels that are in the same frequency.

You can enable or disable VOX by doing one of the following:

- Turn the radio off and then power it on again to enable VOX.
- Change the channel by using the **Scroll Up/Down** buttons to enable VOX.
- Change the channel by using the **Volume/Channel Knob**to enable VOX.
- Turn VOX on or off by using the programmed **VOX** button or menu to enable or disable VOX.
- Press the **PTT** button during radio operation to disable VOX.

NOTICE:
Turning this feature on or off is limited to radios with this function enabled. Check with your dealer or system administrator for more information.

6.12.18.1

Turning Voice Operating Transmission On or Off

Follow the procedure to turn VOX on or off on your radio.

1 Do one of the following:
   - Press the programmed **VOX** button. Skip the steps below.
   - Press OK to access the menu.

2 Press ▲ or ▼ to `Utilities`. Press OK to select.

3 Press ▲ or ▼ to `Radio Settings`. Press OK to select.

4 Press ▲ or ▼ to VOX. Press OK to select.

5 Press OK to enable or disable **VOX**.

NOTICE:
If the Talk Permit Tone is enabled, use a trigger word to initiate the call. Wait for the Talk Permit Tone to finish before speaking clearly into the microphone. See Turning Talk Permit Tone On or Off on page 207 for more information.

6.12.19

Turning Voice Announcement On or Off

This feature enables the radio to audibly indicates the current zone or channel the user has just assigned, or the programmable button the user has just pressed.

This is typically useful when the user has difficulty reading the content shown on the display.

This audio indicator can be customized according to customer requirements. Follow the procedure to turn Voice Announcement on or off on your radio.

6.12.20

Turning Option Board On or Off

Option board capabilities within each channel can be assigned to programmable buttons. A channel can support up to 6 option board features. Follow the procedure to turn option board on or off on your radio.

Press the programmed **Option Board** button.

6.12.21

Text-to-Speech

The Text-to-Speech feature can only be enabled by your dealer. If Text-to-Speech is enabled, the Voice Announcement feature is automatically disabled. If Voice Announcement is enabled, then the Text-to-Speech feature is automatically disabled.

This feature enables the radio to audibly indicate the following features:

- Current Channel
- Current Zone
- Programmed button feature on or off
- Content of received text messages
- Content of received Job Tickets

This audio indicator can be customized per customer requirements. This feature is typically useful when the user is in a difficult condition to read the content shown on the display.

6.12.21.1

Setting Text-to-Speech

Follow the procedure to set the Text-to-Speech feature.

1. Press OK to access the menu.
2. Press ▲ or ▼ to `Utilities`. Press OK to select.
3. Press ▲ or ▼ to `Radio Settings`. Press OK to select.
4. Press ▲ or ▼ to `Voice Announcement`. Press OK to select.
5. Press ▲ or ▼ to any of the following features. Press OK to select.

   The available features are as follows:

   - `All`
   - `Messages`
   - `Job Tickets`
   - `Channel`
   - `Zone`
   - `Program Button`

   ✓ appears beside the selected setting.

6.12.22

Turning Automatic Call Forwarding On or Off

You can enable your radio to automatically forward voice calls to another radio.

1 Press OK to access the menu.

2 Press ▲ or ▼ to `Utilities`. Press OK to select.

3 Press ▲ or ▼ to `Radio Settings`. Press OK to select.

4 Press ▲ or ▼ to `Call Forward`. Press OK to select.

5 Do one of the following:

- Press ▲ or ▼ to enable Call Forwarding. If enabled, ✓ appears beside `Enabled`.
- Press ▲ or ▼ to disable Call Forwarding. If disabled, ✓ disappears beside `Enabled`.

6.12.23

Setting Menu Timer

You can set the time your radio stays in the menu before it automatically switches to the Home screen. Follow the procedure to set the menu timer.

1 Press OK to access the menu.

2 Press ▲ or ▼ to `Utilities`. Press OK to select.

3 Press ▲ or ▼ to `Radio Settings`. Press OK to select.

4 Press ▲ or ▼ to `Display`. Press OK to select.

5 Press ▲ or ▼ to `Menu Timer`. Press OK to select.

6 Press ▲ or ▼ to the required setting. Press OK to select.

6.12.24

Turning Analog Microphone AGC On or Off

The Analog Microphone Automatic Gain Control (AGC) controls the microphone gain of the radio automatically while transmitting on an analog system.
This feature suppresses loud audio or boosts soft audio to a preset value in order to provide a consistent level of audio. Follow the procedure to turn Analog Microphone AGC on or off on your radio.

1 Press OK to access the menu.

2 Press ▲ or ▼ to `Utilities`. Press OK to select.

3 Press ▲ or ▼ to `Radio Settings`. Press OK to select.

4 Press ▲ or ▼ to `Mic AGC-A`. Press OK to select.

5 Press OK to enable or disable Analog Microphone AGC.

The display shows one of the following results:

- If enabled, ✓ appears beside `Enabled`.
- If disabled, ✓ disappears beside `Enabled`.

6.12.25

Turning Digital Microphone AGC On or Off

The Digital Microphone Automatic Gain Control (AGC) controls the microphone gain of the radio automatically while transmitting on a digital system.
This feature suppresses loud audio or boosts soft audio to a preset value in order to provide a consistent level of

audio. Follow the procedure to turn Digital Microphone AGC on or off on your radio.

1 Press OK to access the menu.

2 Press ▲ or ▼ to `Utilities`. Press OK to select.

3 Press ▲ or ▼ to `Radio Settings`. Press OK to select.

4 Press ▲ or ▼ to `Mic AGC-D`. Press OK to select.

5 Press OK to enable or disable Digital Microphone AGC.

The display shows one of the following results:

- If enabled, ✓ appears beside `Enabled`.
- If disabled, ✓ disappears beside `Enabled`.

6.12.26

Turning Intelligent Audio On or Off

Your radio automatically adjusts the audio volume to overcome current background noise in the environment, inclusive of both stationary and non-stationary noise sources. This is a receive-only feature and does not affect transmission audio. Follow the procedure to turn Intelligent Audio on or off on your radio.

NOTICE:
This feature is not applicable during a Bluetooth session.

1 Do one of the following:

- Press the programmed **Intelligent Audio** button. Skip the steps below.
- Press OK to access the menu.

2 Press ▲ or ▼ to `Utilities`. Press OK to select.

3 Press ▲ or ▼ to Radio Settings. Press OK to select.

4 Press ▲ or ▼ to Intelligent Audio. Press OK to select.

5 Do one of the following:

- Press ▲ or ▼ to On. Press OK to select. The display shows ✓ beside On.
- Press ▲ or ▼ to Off. Press OK to select. The display shows ✓ beside Off.

6.12.27

Turning the Acoustic Feedback Suppressor Feature On or Off

This feature allows you to minimize Acoustic Feedback Suppressor in received calls. Follow the procedure to turn the Acoustic Feedback Suppressor on or off on your radio.

1 Press OK to access the menu.

2 Press ▲ or ▼ to Utilities. Press OK to select..

3 Press ▲ or ▼ to Radio Settings. Press OK to select.

4 Press ▲ or ▼ to AF Suppressor. Press OK to select.

5 Do one of the following:

- Press to enable Acoustic Feedback Suppressor. If enabled, ✓ appears beside Enabled.
- Press to disable Acoustic Feedback Suppressor. If disabled, ✓ disappears beside Enabled.

6.12.28

Turning Trill Enhancement On or Off

You can enable this feature when you are speaking in a language that contains many words with alveolar trill

(rolling "R") pronunciations. Follow the procedure to turn Trill Enhancement on or off on your radio.

1 Do one of the following:

- Press the programmed **Trill Enhancement** button. Skip the steps below.
- Press OK to access the menu.

2 Press ▲ or ▼ to `Utilities`. Press OK to select.

3 Press ▲ or ▼ to `Radio Settings`. Press OK to select.

4 Press ▲ or ▼ to `Trill Enhance`. Press OK to select.

5 Do one of the following:

- Press ▲ or ▼ to `On`. Press OK to select. The display shows ✓ beside `On`.
- Press ▲ or ▼ to `Off`. Press OK to select. The display shows ✓ beside `Off`.

6.12.29

Audio Ambience

You can customize the audio ambience for your radio according to your environment.

Default
This is the default setting.

Loud
This setting enables Noise Suppressor and increases speaker loudness for use in noisy surroundings.

Work Group
This setting enables AF Suppressor and disables AGC for use when a group of radios are near to each other.

6.12.29.1

Setting Audio Ambience

Follow the procedure to set the audio ambience on your radio according to your environment.

1 Press OK to access the menu.

2 Press ▲ or ▼ to `Utilities`. Press OK to select.

3 Press ▲ or ▼ to `Radio Settings`. Press OK to select.

4 Press ▲ or ▼ to `Audio Ambience`. Press OK to select.

5 Press ▲ or ▼ to the required setting. Press OK to select.

The settings are as follows.

- Choose `Default` for the default factory settings.
- Choose `Loud` to increase speaker loudness when using in noisy surroundings.
- Choose `Work Group` to reduce acoustic feedback when using with a group of radios that are near to each other.

The display shows ✓ beside the selected setting.

6.12.30

Audio Profiles

You can customize the audio profiles for your radio according to your preference.

Default
This is the default setting.

Level 1, Level 2, and Level 3
These settings are intended to compensate for noise-induced hearing loss that is typical for adults in their 40's, 50's, and 60's or over.

Treble Boost, Mid Boost, and Bass Boost
These settings are intended for a tinnier sound, a more nasal sound, and a deeper sound.

6.12.30.1

Setting Audio Profiles

Follow the procedure to set audio profiles on your radio.

1 Press OK to access the menu.

2 Press ▲ or ▼ to `Utilities`. Press OK to select.

3 Press ▲ or ▼ to `Radio Settings`. Press OK to select.

4 Press ▲ or ▼ to `Audio Profiles`. Press OK to select.

5 Press ▲ or ▼ to the required setting. Press OK to select.

The settings are as follows.

- Choose `Default` to disable the previously selected audio profile and return to the default factory settings.
- Choose `Level 1`, `Level 2`, or `Level 3` for audio profiles intended to compensate for noise-induced hearing loss that is typical for adults over 40 years of age.
- Choose `Treble Boost`, `Mid Boost`, or `Bass Boost` for audio profiles that align with your preference for tinnier, more nasal, or deeper sounds.

The display shows ✓ beside the selected setting.

6.12.31

Turning Global Navigation Satellite System On or Off

Global Navigation Satellite System (GNSS) is a satellite navigation system that determines the radio precise location. GNSS includes Global Positioning System (GPS) and BeiDou Navigation Satellite System (BDS).

NOTICE:
Selected radio models may offer GPS and BDS. GNSS constellation is configured by using CPS. Check with your dealer or system administrator to determine how your radio has been programmed.

1

2 Do one of the following steps to toggle GNSS on or off on your radio.

- Press the programmed **GNSS** button.
- Press OK to access the menu. Proceed to the next step.

3 Press ▲ or ▼ to `Utilities`. Press OK to select.

4 Press ▲ or ▼ to `Radio Settings`. Press OK to select.

5 Press ▲ or ▼ to `GNSS`. Press OK to select.

6 Press OK to enable or disable GNSS.

If enabled, ✓ appears beside `Enabled`.
If disabled, ✓ disappears beside `Enabled`.

6.12.32

Flexible Receive List

Flexible Receive List is a feature that allows you to create and assign members on the receive talkgroup list. Your radio can support a maximum of 16 members in the list. This feature is supported in Capacity Plus.

6.12.32.1

Turning Flexible Receive List On or Off

Follow the procedure to turn Flexible Receive List on or off.

1 Do one of the following:

- Press the programmed **Flexible Receive List** button. Skip the following steps.
- Press OK to access the menu.

2 Press ▲ or ▼ to `Flexible Rx List`. Press OK to select.

3 Do one of the following:

- Press ▲ or ▼ to `Turn On`. Press OK to select.

A positive indicator tone sounds.

The display shows a positive mini notice.

- Press ▲ or ▼ to `Turn Off`. Press OK to select.
  A negative indicator tone sounds.

  The display shows a negative mini notice.

6.12.33

General Radio Information

Your radio contains information on various general parameters.

The general information of your radio is as follows:

- Radio alias and ID.
- Firmware and Codeplug versions.
- Software update.
- GNSS information.
- Site information.

NOTICE:

Press ↩⌂ to return to the previous screen. Long press ↩⌂ to return to the Home screen. The radio exits the current screen once the inactivity timer expires.

6.12.33.1

Checking Radio Alias and ID

1 Do one of the following:

- Press the programmed **Radio Alias and ID** button. Skip the following steps.
  A positive indicator tone sounds.

  You can press the programmed **Radio Alias and ID** button to return to the previous screen.

- Press OK to access the menu.

2 Press ▲ or ▼ to `Utilities`. Press OK to select.

3 Press ▲ or ▼ to Radio Info. Press OK to select.

4 Press ▲ or ▼ to My ID. Press OK to select.

The first text line shows the radio alias. The second text line shows the radio ID.

6.12.33.2

Checking Firmware and Codeplug Versions

1 Press OK to access the menu.

2 Press ▲ or ▼ to Utilities. Press OK to select.

3 Press ▲ or ▼ to Radio Info. Press OK to select.

4 Press ▲ or ▼ to Versions. Press OK to select.

The display shows the current firmware and codeplug versions.

6.12.33.3

Checking Software Update Information

This feature shows the date and time of the latest software update carried out through OTAP or Wi-Fi. Follow the procedure to check the software update information on your radio.

1 Press OK to access the menu.

2 Press ▲ or ▼ to Utilities. Press OK to select.

3 Press ▲ or ▼ to Radio Info. Press OK to select.

4 Press ▲ or ▼ to SW Update. Press OK to select.

The display shows the date and time of the latest software update.

Software Update menu is only available after at least one successful OTAP or Wi-Fi session. See Over-the-Air Programming on page 482 for more information.

6.12.33.4

Checking GNSS Information

Displays the GNSS information on your radio, such as values of:

- Latitude
- Longitude
- Altitude
- Direction
- Velocity
- Horizontal Dilution of Precision (HDOP)
- Satellites
- Version

1 Press OK to access the menu.

2 Press ▲ or ▼ to Utilities. Press OK to select.

3 Press ▲ or ▼ to Radio Info. Press OK to select.

4 Press ▲ or ▼ to GNSS Info. Press OK to select.

5 Press ▲ or ▼ to the required item. Press OK to select. The display shows the requested GNSS information.

6.12.33.5

Displaying Site Information

Follow the procedure to display the current site name your radio is on.

1 Press OK to access the menu.

2 Press ▲ or ▼ to `Utilities`. Press OK to select.

3 Press ▲ or ▼ to `Radio Info`. Press OK to select.

4 Press ▲ or ▼ to `Site Info`. Press OK to select.

The display shows the current site name.

6.12.34

Viewing Enterprise Wi-Fi Certificate Details

You can view the details of the selected Enterprise Wi-Fi Certificate.

1 Press OK to access the menu.

2 Press ▲ or ▼ to `Utilities`. Press OK to select.

3 Press ▲ or ▼ to `Certificate Menu`. Press OK to select.

✓ appears beside ready certificates.

4 Press ▲ or ▼ to the required certificate.

Press OK to select.

Your radio displays the full details of the certificate.

NOTICE:
For unready certificates, the display shows only Status.

Authorized Accessories List

Motorola Solutions provides a list of accessories to improve the productivity of your radio.

Table 17: Antenna

Part Number	Description
HAE6017_	Combination GNSS (GPS/Galileo/QZSS/GLONASS), UHF, 403–527 MHz, 2.0 dB Gain, Through-Hole Mount, BNC
HAE6018_	Combination GPS/UHF, 470 – 527 MHz, 1/4 Wave, Through-Hole Mount, BNC
HAE6021_	UHF, 403–527 MHz, 2.0 dB Gain, Through-Hole Mount, BNC
HAE6023_	Combination GPS/UHF, 494 – 512 MHz, 3.0 dB Gain, Through-Hole Mount, BNC
HAE6025_	Combination GPS/UHF, 470 – 494 MHz, 3.0 dB Gain, Through-Hole Mount, BNC
HAF4013_	800/900, 806-941 MHz, Stub-by,Through-hole Mount, Mini U
HAF4025_	800/900, 806-941 MHz, 1/4 Wave,Through-hole Mount, Mini U
HAF4026_	800/900, 806-941 MHz, 3dB Gain,Through-hole Mount, Mini U
HAF4027_	800/900, 806–941 MHz, 5.0dB Gain, Through-Hole Mount, Mini-U
HAF4029_	Combination GPS+RF, 806–941 MHz, 1/4 Wave, Through-Hole Mount, Mini-U
HAF4030_	Combination GPS+RF, 806–941 MHz, 3.0 dB Gain, Through-Hole Mount, Mini-U
HAF4032_	Combination GPS+RF, 806–941 MHz, 5.0 dB Gain, Through-Hole Mount, Mini-U
HAF4033_	Combination GPS+RF, 806–941 MHz, 5.0 dB Gain, Through-Hole Mount, Mini-U

Part Number	Description
PMAD4140_	UHF, 300–340 MHz, 1/4 Wave, Through-Hole Mount, BNC
PMAD4102_	Combination GPS/GNSS/UHF, 350–400 MHz, 1/4 Wave, Through-Hole Mount, BNC
PMAD4107_	UHF, 350–400 MHz, 1/4 Wave, Through-Hole Mount, BNC
PMAD4141_	UHF, 320–360 MHz, 1/4 Wave, Through-Hole Mount, BNC
PMAD4142_	Combination GNSS (GPS/Galileo/QZSS/GLONASS), UHF, 300–340 MHz, 1/4 Wave, Through-Hole Mount, BNC
PMAD4143_	Combination GNSS (GPS/Galileo/QZSS/GLONASS), UHF, 320–360 MHz, 1/4 Wave, Through-Hole Mount, BNC
PMAE4035_	Combination GNSS (GPS/Galileo/QZSS/GLONASS), UHF, 403–430 MHz, 1/4 Wave, Through-Hole Mount, BNC

Part Number	Description
PMAE4036_	Combination GNSS (GPS/Galileo/QZSS/GLONASS), UHF, 406–420 MHz, 3.5 dB Gain, Through-Hole Mount, BNC
PMAE4037_	Combination GNSS (GPS/Galileo/QZSS/GLONASS), UHF, 450–470 MHz, 1/4 Wave, Through-Hole Mount, BNC
PMAE4038_	Combination GNSS (GPS/Galileo/QZSS/GLONASS), UHF, 450–470 MHz, 5 dB Gain, Through-Hole Mount, BNC
PMAN4000_	Fixed Mount GPS Active Antenna
PMAN4001_	Window Mount GPS Active Antenna
PMAN4002_	Magnetic Mount GPS Active Antenna
PMAN4003_	Combination GNSS (GPS/Galileo/QZSS/BeiDou-2), NMO Mount Base, BNC
RAD4198_	VHF, 136–144 MHz, 1/4 Wave, Through-Hole Mount, BNC

Part Number	Description
RAD4199_	VHF, 146–150.8 MHz, 1/4 Wave, Through-Hole Mount, BNC
RAD4200_	VHF, 150.8–162 MHz, 1/4 Wave, Through-Hole Mount, BNC
RAD4201_	VHF, 162–174 MHz, 1/4 Wave, Through-Hole Mount, BNC
RAD4219_	Combination GNSS (GPS/Galileo/ QZSS/GLONASS), VHF, 136–144 MHz, 1/4 Wave, Through-Hole Mount, BNC
RAD4220_	Combination GNSS (GPS/Galileo/ QZSS/GLONASS), VHF, 146–150.8 MHz, 1/4 Wave, Through-Hole Mount, BNC
RAD4221_	Combination GNSS (GPS/Galileo/ QZSS/GLONASS), VHF, 150.8–162 MHz, 1/4 Wave, Through-Hole Mount, BNC
RAD4222_	Combination GNSS (GPS/Galileo/ QZSS/GLONASS), VHF, 162–174 MHz, 1/4 Wave, Through-Hole Mount, BNC
RAE4151_	UHF, 403–430 MHz, 1/4 Wave, Through-Hole Mount, BNC
RAE4152_	UHF, 450–470 MHz, 1/4 Wave, Through-Hole Mount, BNC
RAE4154_	UHF, 450–470 MHz, 5.0 dB Gain, Through-Hole Mount, BNC
RAE4158_	UHF, 406–420 MHz, 3.5 dB Gain, Through-Hole Mount, BNC

Table 18: Antenna for use with base PMAN4003_ only

Part Number	Description
HAE6027_	UHF, 494–512 MHz, 3.0 dB Gain, Through-Hole Mount
HAE6028_	UHF, 470–494 MHz, 3.0 dB Gain, Through-Hole Mount

Part Number	Description
HAE6029_[14]	UHF, 403–527 MHz, 2.0 dB Gain, Through-Hole Mount
HAE6030_	UHF, 470–527 MHz, 1/4 Wave, Through-Hole Mount
PMAE4039_	UHF, 403–430 MHz, 1/4 Wave
PMAE4041_	UHF, 450–470 MHz, 1/4 Wave
PMAE4040_	UHF, 406–420 MHz, 3.5 dB Gain
PMAE4042_	UHF, 450–470 MHz, 3.5 dB Gain
PMAE4043_	UHF, 450–470 MHz, 5.0 dB Gain
RAD4223_	VHF, 162–174 MHz, 1/4 Wave
RAD4224_	VHF, 150.8–162 MHz, 1/4 Wave
RAD4225_	VHF, 146–150.8 MHz, 1/4 Wave
RAD4226_	VHF, 136–144 MHz, 1/4 Wave
RAD4227_	VHF, 146–172 MHz, 3.0 dB Gain

[14] Use with standard antenna bases

Table 19: Audio Accessories

Part Number	Description
89409N	HK200 Bluetooth Headset with US Plug
ASMHK200VP-GB2A	HK200 Bluetooth Headset with UK Plug
ASMHK200-GB3A	HK200 Bluetooth Headset with Euro Plug
ASMHK200-KR2A	HK200 Bluetooth Headset with Korea Plug
ASMHK200-CN2A	HK200 Bluetooth Headset with China Plug
ASMHK200-AU2A	HK200 Bluetooth Headset with Australia Plug
HMN4098_	Telephone Style Handset
NNTN8125_	Operations Critical Wireless Earpiece, 12 in. Cable
NNTN8126_	Operations Critical Wireless Earpiece, 9.5 in. Cable

Part Number	Description
NNTN8127_	Operations Critical Wireless Push-to-Talk POD
NNTN8189_	Non-Secure Wireless Headset & Push-to-Talk Device with Push-to-Talk Audio, 12-Inch Cable
NNTN8190_	Bluetooth Accessory Kit, SP, 9.5 in. Cable
NNTN8296_[15]	Wireless Covert Kit, includes two sets of 2-Wire Earbuds (1 Black and 1 White), 1-Wire Earbud (Black), and a 3.5 mm Adapter to plug into any off-the-shelf headphones
NNTN8385_[16]	Wireless Neckloop Y-adapter and retention hook for Completely Discreet Kit
PMLN6463_	Business Wireless Accessory Kit
PMMN4095_	Wireless R2.17A Long Range Remote Speaker Microphone

Part Number	Description
PMMN4097_	Wireless R2.17 Mobile Microphone Gateway
PMLN7181_[16]	Flexible Fit Swivel Earpiece with Boom Mic
PMLN7203_[16]	Flexible Fit Swivel Earpiece with Boom Mic, Multipack
RLN4922_[16]	Completely Discreet Earpiece Kit
RLN6490_	XBT Behind-the-Neck, Non-secure Wireless Heavy Duty Headset
RLN6491_	XBT Overhead, Non-secure Wireless Heavy Duty Headset
RLN6550_[16]	Swivel Earpiece with In-Line Microphone for Bluetooth Accessory Kit Pod, Pack of 3
RMN5050_	Desktop Microphone
RMN5052_	Compact Microphone

[15] Your radio is compatible with the accessories listed here. Contact your dealer for details.
[16] Your radio is compatible with the accessories listed here. Contact your dealer for details.

Part Number	Description
RMN5127_	IMPRES 4-Way Navigation Keypad Microphone
RMN5053_	Heavy Duty Microphone with Enhanced Audio
RMN5054_	Visor Microphone with Enhanced Audio

Table 20: Cables

Part Number	Description
3075336B07	Compact Microphone Replacement Cable
3075336B10	Heavy Duty/Keypad Microphone Replacement Cable
HKN4137_	Power Cable to Battery, 10-foot (3-metre) Cable, 15 amp (1–25 Watt)
HKN4191_	Power Cable to Battery, 10-foot (3-metre) Cable, 20 amp (1–45 Watt)
HKN4192_	Power Cable to Battery, 20-foot (6-metre) Cable, 20 amp (1–45 Watt)
HKN6184_	Mobile Front (MMP) Programming Cable
PMKN4010_	MAP Programming Cable
PMKN4016_	MAP Programming and Test Cable
PMKN4018_	Mobile and Repeater Rear Accessory Connector Universal Cable
PMKN4033_	Mobile Mic Extension Cable, 10 feet
PMKN4034_	Mobile Mic Extension Cable, 20 feet
PMKN4143_	Remote Mount (3-metre) Cable
PMKN4144_	Remote Mount (5-metre) Cable
RKN4136_	Ignition Sense Cable

Table 21: Desktop Accessories

Part Number	Description
3060665A04	US Line Cord
GKN6266_	Radio Power Cable for GPN6145
GLN7318_	Desktop Tray without Speaker

Part Number	Description
GPN6145_	Switchmode Power Supply with CE marked (1–25 Watt Models)
HPN4007_	Power Supply and Cable
HPN4011_	Power Supply 14 Volt 15 Amp UNI 117/240 VAC, UK Plug
PMLN5072_	Hardware Kit for Rear Accessory Connector
RSN4005_	Desktop Tray with Speaker

Table 22: Mounting Kits

Part Number	Description
AY000269A01_ [17]	Screen Protector, Clear (single pack contains one unit)
RLN6465_	In Dash (DIN) Mounting Kit
RLN6466_	Low Profile Trunnion Kit
RLN6467_	High Profile Trunnion Kit
RLN6468_	Key Lock Trunnion Kit
RLN6469_	Low Profile Trunnion Bag
PMLN6402_	Remote Mount Transceiver Interface
PMLN6403_	Remote Mount Control Head Interface

Table 23: Miscellaneous Accessories

Part Number	Description
DQT1	Surge Protector, Tower Mount Kit
DSISB50LNC2MA	Surge Protector, Coax Protector Bulkhead
HKN9557_	PL259/Mini-U Antenna Adapter, 8 feet (2.4 metre) Cable
HLN9073_	Microphone Hang Up Clip (All Microphones)
HLN9414_	Universal Microphone Hang Up Clip (All Microphones)

[17] Your radio is compatible with the accessories listed here. Contact your dealer for details.

Part Number	Description
PMKN4072_	IMPRES Mobile MMP Non-PC Adapter
PMKN4070_	IMPRES Mobile MAP Non-PC Adapter
PMLN5718_S	Generic Option Board
PMLN7052_[16]	Operations Critical Wireless 1-Wire Surveillance Kit with translucent tube
RLN5926_	Push Button PTT
RLN5929_	Emergency Footswitch

Table 24: Speakers

Part Number	Description
RSN4002_	13 W External Speaker
RSN4003_	7.5 W External Speaker
RSN4004_	5 W External Speaker

Daftar Isi

Informasi Keselamatan Penting..... 34
Versi Perangkat Lunak..... 35
Hak Cipta.....36
Hak Cipta Perangkat Lunak Komputer.....38
Perawatan Radio.....39
Bab 1 : Memulai..... 41
1.1 Mengaktifkan Radio.....41
1.2 Menonaktifkan Radio.....41
1.3 Menyesuaikan Volume..... 41
Bab 2 : Kontrol Radio..... 42
2.1 Kenop Volume/Saluran.....42
2.1.1 Mengatur Preferensi Operasi Kenop Ganda.....43
2.2 Tombol Mikrofon Keypad.....43
Bab 3 : WAVE..... 46
3.1 WAVE OnCloud/OnPremise.....46
3.1.1 Beralih dari Mode Radio ke Mode WAVE..... 46
3.1.2 Melakukan Panggilan Grup WAVE..... 47
3.1.3 Menerima dan Menjawab Panggilan Grup WAVE..... 48
3.1.4 Menerima dan Menjawab Panggilan Pribadi WAVE..... 48
3.1.5 Beralih dari Mode WAVE ke Mode Radio..... 48
3.2 WAVE Tactical/5000.....49
3.2.1 Mengatur Saluran WAVE Aktif.....49
3.2.2 Menampilkan Informasi Saluran WAVE..... 49
3.2.3 Menampilkan Informasi Endpoint WAVE..... 50
3.2.4 Mengubah Konfigurasi WAVE..... 50
3.2.5 Melakukan Panggilan Grup WAVE..... 51
Bagian I : Capacity Max..... 53
4.1 Tombol Tekan untuk Berbicara (PTT)..... 53
4.2 Tombol yang Dapat Diprogram..... 53
4.3 Fungsi Radio yang Dapat Ditetapkan.....54
4.4 Fungsi Utilitas atau Pengaturan yang Dapat Ditetapkan.....56
4.5 Mengakses Fungsi Terprogram.....57
4.6 Indikator Status.....57

4.6.1 Ikon..... 58
4.6.2 Indikator LED..... 64
4.6.3 Nada..... 65
4.6.3.1 Nada Audio..... 65
4.6.3.2 Nada Indikator.....66
4.7 Registrasi.....66
4.8 Pemilihan Zona dan Saluran..... 67
4.8.1 Memilih Zona..... 67
4.8.2 Memilih Zona Menggunakan Pencarian Alias.....68
4.8.3 Memilih Jenis Panggilan..... 69
4.8.4 Memilih Site..... 69
4.8.5 Permintaan Jelajah..... 69
4.8.6 Kunci Site Aktif/Nonaktif..... 70
4.8.7 Batasan Site..... 70
4.8.8 Trunking Site.....70
4.9 Panggilan.....71
4.9.1 Panggilan Grup.....72
4.9.1.1 Melakukan Panggilan Grup..... 73
4.9.1.2 Melakukan Panggilan Grup Menggunakan Daftar Kontak.....73
4.9.1.3 Melakukan Panggilan Grup Menggunakan Tombol Angka yang Dapat Diprogram 75
4.9.1.4 Melakukan Panggilan Grup Menggunakan Pencarian Alias 76
4.9.1.5 Merespons Panggilan Grup..... 78
4.9.2 Panggilan Siaran 79
4.9.2.1 Melakukan Panggilan Siaran 79
4.9.2.2 Melakukan Panggilan Siaran Menggunakan Daftar Kontak 80
4.9.2.3 Melakukan Panggilan Siaran Menggunakan Tombol Angka yang Dapat Diprogram.....80
4.9.2.4 Menerima Panggilan Siaran 81
4.9.3 Panggilan Pribadi.....82

4.9.3.1 Melakukan Panggilan Pribadi.....82
4.9.3.2 Melakukan Panggilan Pribadi Menggunakan Tombol Angka yang Dapat Diprogram 83
4.9.3.3 Melakukan Panggilan Pribadi Menggunakan Pencarian Alias..... 84
4.9.3.4 Melakukan Panggilan Pribadi dengan Tombol Panggilan Satu Sentuhan..... 86
4.9.3.5 Melakukan Panggilan Pribadi Menggunakan Panggilan Manual..... 87
4.9.3.6 Menerima Panggilan Pribadi.....88
4.9.3.7 Menerima Panggilan Pribadi.....88
4.9.3.8 Menolak Panggilan Pribadi.....89
4.9.4 Semua Panggilan 89
4.9.4.1 Melakukan Semua Panggilan 90
4.9.4.2 Melakukan Semua Panggilan Menggunakan Tombol Angka yang Dapat Diprogram 90
4.9.4.3 Melakukan Semua Panggilan Menggunakan Pencarian Alias..... 91
4.9.4.4 Menerima Semua Panggilan 93
4.9.5 Panggilan Telepon.....94
4.9.5.1 Melakukan Panggilan Telepon..... 94
4.9.5.2 Melakukan Panggilan Telepon dengan Tombol yang Dapat Diprogram 95
4.9.5.3 Melakukan Panggilan Telepon Menggunakan Daftar Kontak 98
4.9.5.4 Melakukan Panggilan Telepon Menggunakan Pencarian Alias..... 100
4.9.5.5 Melakukan Panggilan Telepon Menggunakan Panggilan Manual..... 103

4.9.5.6 Multi-Frekuensi Nada Ganda..... 106
4.9.5.6.1 Mengaktifkan Nada DTMF.....106
4.9.5.7 Merespons Panggilan Telepon sebagai Semua Panggilan..... 106
4.9.5.8 Merespons Panggilan Telepon sebagai Panggilan Grup..... 107
4.9.5.9 Merespons Panggilan Telepon sebagai Panggilan Pribadi.....108
4.9.6 Memulai Interupsi Transmisi.....108
4.9.7 Penimpaan Panggilan.....109
4.9.8 Interupsi Suara..... 109
4.9.8.1 Mengaktifkan Interupsi Suara..... 109
4.10 Fitur Lanjutan.....110
4.10.1 Antrean Panggilan..... 110
4.10.2 Panggilan Prioritas.....111
4.10.3 Pemindaian Grup Bicara 112
4.10.3.1 Mengaktifkan atau Menonaktifkan Pemindaian Grup Bicara.....112
4.10.4 Daftar Grup Terima.....113
4.10.5 Monitor Prioritas.....113
4.10.5.1 Mengedit Prioritas untuk Grup Bicara..... 114
4.10.6 Afiliasi Multi-Grup Bicara..... 115
4.10.6.1 Menambahkan Afiliasi Grup Bicara.....115
4.10.6.2 Menghapus Afiliasi Grup Bicara.....116
4.10.7 Talkback 117
4.10.8 Bluetooth®..... 118
4.10.8.1 Mengaktifkan dan Menonaktifkan Bluetooth..... 119
4.10.8.2 Menghubungkan ke Perangkat Bluetooth..... 119
4.10.8.3 Menghubungkan ke Perangkat Bluetooth dalam Mode Dapat Ditemukan..... 120
4.10.8.4 Memutuskan Sambungan dari Perangkat Bluetooth.....121

4.10.8.5 Mengalihkan Rute Audio antara Speaker Radio Internal dan Perangkat Bluetooth.....122
4.10.8.6 Melihat Detail Perangkat.....122
4.10.8.7 Menghapus Nama Perangkat.....123
4.10.8.8 Penguatan Mikrofon Bluetooth.....123
4.10.9 Lokasi Dalam Ruangan..... 124
4.10.9.1 Mengaktifkan atau Menonaktifkan Lokasi Dalam Ruangan..... 124
4.10.9.2 Mengakses Informasi Suar Lokasi Dalam Ruangan..... 126
4.10.10 Kontrol Multi-Site..... 126
4.10.10.1 Mengaktifkan Pencarian Site Manual.....126
4.10.10.2 Kunci Site Aktif/ Nonaktif.....127
4.10.10.3 Mengakses Daftar Site Tetangga.....127
4.10.11 Pengingat Saluran Rumah.....127
4.10.11.1 Mematikan Suara Pengingat Saluran Rumah.....128
4.10.11.2 Mengatur Saluran Rumah Baru.....128
4.10.12 Monitor Jauh..... 129
4.10.12.1 Menginisiasi Monitor Jauh..... 129
4.10.12.2 Mengaktifkan Monitor Jauh Menggunakan Daftar Kontak 130
4.10.12.3 Mengaktifkan Monitor Jauh Menggunakan Panggilan Manual..... 131
4.10.13 Pengaturan Kontak..... 132
4.10.13.1 Mengalokasikan Entri ke Tombol Angka yang Dapat Diprogram 133
4.10.13.2 Menghapus Kaitan antara Entri dan Tombol Angka yang Dapat Diprogram 134
4.10.13.3 Menambahkan Kontak Baru..... 135
4.10.14 Pengaturan Indikator Panggilan.....135

4.10.14.1 Mengaktifkan atau Menonaktifkan Dering Panggilan untuk Panggilan Pribadi..... 136
4.10.14.2 Mengaktifkan atau Menonaktifkan Dering Panggilan untuk Pesan Teks..... 136
4.10.14.3 Mengaktifkan atau Menonaktifkan Dering Panggilan untuk Peringatan Panggilan.....137
4.10.14.4 Mengaktifkan atau Menonaktifkan Dering Panggilan untuk Panggilan Selektif..... 138
4.10.14.5 Mengaktifkan atau Menonaktifkan Dering Panggilan untuk Status Telemetri dengan Teks..... 139
4.10.14.6 Menetapkan Gaya Dering..... 139
4.10.14.7 Volume Nada Alarm yang Semakin Tinggi..... 140
4.10.15 Fitur Log Panggilan 140
4.10.15.1 Melihat Panggilan Terbaru..... 141
4.10.15.2 Menyimpan Alias atau ID dari Daftar Panggilan.....141
4.10.15.3 Menghapus Panggilan dari Daftar Panggilan..... 142
4.10.15.4 Menghapus Semua Panggilan dari Daftar Panggilan 143
4.10.15.5 Melihat Detail dari Daftar Panggilan..... 143
4.10.16 Operasi Peringatan Panggilan. 144
4.10.16.1 Melakukan Peringatan Panggilan..... 145
4.10.16.2 Membuat Peringatan Panggilan Menggunakan Daftar Kontak.....145
4.10.16.3 Merespons Peringatan Panggilan.....146
4.10.17 Alias Pemanggil Dinamis..... 146
4.10.17.1 Menampilkan Daftar Alias Pemanggil..... 147
4.10.17.2 Memulai Panggilan Pribadi dari Daftar Alias Pemanggil..... 147
4.10.18 Mode Bisu.....147

4.10.18.1 Mengaktifkan Mode Bisu..... 148
4.10.18.2 Menyetel Pewaktu Mode Bisu..... 148
4.10.18.3 Keluar dari Mode Bisu 149
4.10.19 Pengoperasian Darurat.....149
4.10.19.1 Mengirim Alarm Darurat..... 151
4.10.19.2 Mengirim Alarm Darurat dengan Panggilan..... 152
4.10.19.3 Mengirim Alarm Darurat dengan Panduan Suara 154
4.10.19.4 Menerima Alarm Darurat..... 155
4.10.19.5 Merespons Alarm Darurat 156
4.10.19.6 Merespons Alarm Darurat dengan Panggilan..... 157
4.10.19.7 Keluar dari Mode Darurat..... 158
4.10.20 Pesan Status..... 158
4.10.20.1 Mengirim Pesan Status.....158
4.10.20.2 Mengirim Pesan Status Menggunakan Tombol yang Dapat Diprogram.....159
4.10.20.3 Mengirim Pesan Status Menggunakan Daftar Kontak.....160
4.10.20.4 Mengirim Pesan Status Menggunakan Panggilan Manual..... 161
4.10.20.5 Melihat Pesan Status. 162
4.10.20.6 Menanggapi Pesan Status.....162
4.10.20.7 Menghapus Pesan Status.....163
4.10.20.8 Menghapus Semua Pesan Status.....164
4.10.21 Pengolahan Pesan Teks 164
4.10.21.1 Pesan Teks..... 165
4.10.21.1.1 Melihat Pesan Teks..... 165
4.10.21.1.2 Melihat Pesan Teks Status Telemetri..... 166

4.10.21.1.3 Merespons Pesan Teks..... 166
4.10.21.1.4 Merespons Pesan Teks dengan Teks Cepat.....167
4.10.21.1.5 Mengirim Ulang Pesan Teks.....168
4.10.21.1.6 Meneruskan Pesan Teks..... 169
4.10.21.1.7 Meneruskan Pesan Teks Menggunakan Panggilan Manual..... 169
4.10.21.1.8 Mengedit Pesan Teks..... 170
4.10.21.1.9 Menulis Pesan Teks..... 171
4.10.21.1.10 Mengirim Pesan Teks..... 172
4.10.21.1.11 Menghapus Pesan Teks dari Kotak Masuk.....173
4.10.21.1.12 Menghapus Semua Pesan Teks dari Kotak Masuk..... 173
4.10.21.2 Pesan Teks Terkirim.. 174
4.10.21.2.1 Melihat Pesan Teks Terkirim..... 175
4.10.21.2.2 Mengirim Pesan Teks Terkirim..... 175
4.10.21.2.3 Menghapus Pesan Teks Terkirim dari folder Item Terkirim..... 176
4.10.21.2.4 Menghapus Semua Pesan Teks Terkirim dari folder Item Terkirim..... 176
4.10.21.3 Pesan SMS Tersimpan..... 177
4.10.21.3.1 Melihat Pesan Teks Tersimpan... 177
4.10.21.3.2 Mengedit Pesan Teks Tersimpan... 178
4.10.21.3.3 Menghapus Pesan Teks Tersimpan dari Folder Konsep.....179

4.10.21.4 Pesan Teks Cepat 179
4.10.21.4.1 Mengirim Pesan Teks Cepat 179
4.10.22 Konfigurasi Entri Teks.....180
4.10.22.1 Mengaktifkan atau Menonaktifkan Koreksi Kata..... 181
4.10.22.2 Mengaktifkan atau Menonaktifkan Prediksi Kata..... 181
4.10.22.3 Kapitalisasi Kalimat....182
4.10.22.4 Melihat Kata Khusus.. 183
4.10.22.5 Mengedit Kata Khusus..... 184
4.10.22.6 Menambahkan Kata Khusus..... 185
4.10.22.7 Menghapus Kata Khusus..... 186
4.10.22.8 Menghapus Semua Kata Khusus.....187
4.10.23 Tiket Tugas..... 188
4.10.23.1 Mengakses Folder Tiket Tugas..... 189
4.10.23.2 Masuk atau Keluar dari Server Jauh.....189
4.10.23.3 Membuat Tiket Tugas 190
4.10.23.4 Merespons Tiket Tugas..... 190
4.10.23.5 Mengirim Tiket Tugas Menggunakan Satu Template Tiket Tugas..... 191
4.10.23.6 Mengirim Tiket Tugas Menggunakan Lebih Dari Satu Template Tiket Tugas..... 192
4.10.23.7 Menghapus Tiket Tugas..... 192
4.10.23.8 Menghapus Semua Tiket Tugas..... 193
4.10.24 Privasi..... 194
4.10.24.1 Mengaktifkan atau Menonaktifkan Privasi.....195
4.10.25 Larangan Tanggapan..... 195
4.10.25.1 Menonaktifkan atau Menonaktifkan Larangan Tanggapan.....196
4.10.26 Stun/Revive..... 196
4.10.26.1 Mengaktifkan Radio... 197

4.10.26.2 Menonaktifkan Sementara Radio Menggunakan Daftar Kontak..... 197
4.10.26.3 Menonaktifkan Radio Menggunakan Panggilan Manual..... 198
4.10.26.4 Mengaktifkan Radio... 199
4.10.26.5 Mengaktifkan Radio Menggunakan Daftar Kontak..... 199
4.10.26.6 Mengaktifkan Radio Menggunakan Panggilan Manual..... 200
4.10.27 Radio Kill.....201
4.10.28 Pekerja Terpisah.....201
4.10.29 Kunci Kata Sandi..... 202
4.10.29.1 Mengakses Radio Menggunakan Kata Sandi.....202
4.10.29.2 Membuka Kunci Radio dalam Status Terkunci.....203
4.10.29.3 Mengaktifkan atau Menonaktifkan Kunci Kata Sandi 203
4.10.29.4 Mengganti Kata Sandi204
4.10.30 Daftar Notifikasi..... 205
4.10.30.1 Mengakses Daftar Notifikasi..... 206
4.10.31 Pemrograman Melalui Udara...206
4.10.32 Memilih Mode Koneksi Periferal Pihak Ketiga..... 207
4.10.33 Indikator Kekuatan Sinyal Penerimaan..... 208
4.10.33.1 Melihat Nilai RSSI.....208
4.10.34 Konfigurasi Panel Depan.....208
4.10.34.1 Masuk ke Mode Konfigurasi Panel Depan..... 208
4.10.34.2 Mengedit Parameter Mode FPP 209
4.10.35 Pengoperasian Wi-Fi..... 209
4.10.35.1 Mengaktifkan atau Menonaktifkan Wi-Fi..... 210
4.10.35.2 Mengaktifkan atau Menonaktifkan Wi-Fi dari Jarak Jauh Menggunakan Radio Khusus (Kontrol Individu).....211
4.10.35.3 Mengaktifkan atau Menonaktifkan Wi-Fi dari Jarak Jauh Menggunakan Radio Khusus (Kontrol Grup)..... 212

4.10.35.4 Menghubungkan ke Titik Akses Jaringan.....213
4.10.35.5 Memeriksa Status Koneksi Wi-Fi.....214
4.10.35.6 Menyegarkan Daftar Jaringan..... 214
4.10.35.7 Menambahkan Jaringan..... 215
4.10.35.8 Melihat Detail Titik Akses Jaringan..... 216
4.10.35.9 Menghapus Titik Akses Jaringan..... 217
4.10.36 Penetapan Nomor Grup Dinamis (DGNA)..... 217
4.10.36.1 Melakukan Panggilan DGNA.....218
4.10.36.2 Melakukan Panggilan Non-DGNA.....218
4.10.36.3 Menerima dan Menjawab Panggilan DGNA..... 219
4.11 Utilitas.....219
4.11.1 Tingkat Daya.....219
4.11.1.1 Mengatur Tingkat Daya220
4.11.2 Mengaktifkan atau Menonaktifkan Nada/Peringatan Radio 220
4.11.3 Mengaktifkan atau Menonaktifkan Nada Keypad.....221
4.11.4 Mengatur Tingkat Offset Volume Nada/Peringatan.....222
4.11.5 Mengaktifkan atau Menonaktifkan Nada Izin Bicara..... 223
4.11.6 Mengaktifkan atau Menonaktifkan Nada Penyalaan.....223
4.11.7 Mengatur Nada Peringatan Pesan Teks.....224
4.11.8 Mengubah Mode Layar.....225
4.11.9 Mengatur Kecerahan Layar..... 226
4.11.10 Mengaktifkan atau Menonaktifkan Klakson/Lampu.....226
4.11.11 Mengaktifkan atau Menonaktifkan Indikator LED.....227
4.11.12 Mengaktifkan atau Menonaktifkan Sistem Public Address. 228
4.11.13 Mengaktifkan atau Menonaktifkan Sistem Public Address Eksternal.....228

4.11.14 Mengaktifkan atau Menonaktifkan Layar Pengantar.....229
4.11.15 Mengatur Bahasa..... 230
4.11.16 Mengidentifikasi Jenis Kabel... 230
4.11.17 Mengaktifkan atau Menonaktifkan Pengumuman Suara.... 231
4.11.18 Mengaktifkan atau Menonaktifkan Papan Opsi.....231
4.11.19 Teks ke Ucapan.....231
4.11.19.1 Mengatur Teks ke Ucapan.....232
4.11.20 Mengatur Pencatat Waktu Menu.....233
4.11.21 Mengaktifkan atau Menonaktifkan AGC Mikrofon Digital....233
4.11.22 Mengaktifkan atau Menonaktifkan Audio Cerdas.....234
4.11.23 Mengaktifkan atau Menonaktifkan Fitur Peredam Umpan Balik Akustik..... 235
4.11.24 Mengaktifkan atau Menonaktifkan Peningkatan Trill.....236
4.11.25 Ambien Audio..... 236
4.11.25.1 Mengatur Ambien Audio.....237
4.11.26 Profil Audio..... 237
4.11.26.1 Mengatur Profil Audio 238
4.11.27 Mengaktifkan atau Menonaktifkan Global Navigation Satellite System.....239
4.11.28 Informasi Umum Radio.....239
4.11.28.1 Memeriksa Alias dan ID Radio.....240
4.11.28.2 Memeriksa Versi Firmware dan Codeplug.....240
4.11.28.3 Memeriksa Informasi Pembaruan Perangkat Lunak.... 241
4.11.28.4 Memeriksa Informasi GNSS.....241
4.11.28.5 Menampilkan Informasi Site..... 242
4.11.29 Melihat Detail Sertifikat Wi-Fi Enterprise..... 243
Bagian II : Connect Plus.....244
5.1 Kontrol Radio Tambahan dalam Mode Connect Plus..... 244

5.1.1 Tombol Tekan untuk Berbicara (Push-to-Talk/PTT)..... 244
5.1.2 Tombol yang Dapat Diprogram....244
5.1.2.1 Fungsi Radio yang Dapat Ditetapkan..... 245
5.1.2.2 Fungsi Utilitas atau Pengaturan yang Dapat Ditetapkan.....247
5.1.3 Mengidentifikasi Indikator Status dalam Mode Connect Plus.....247
5.1.3.1 Ikon Layar..... 247
5.1.3.2 Ikon Panggilan..... 250
5.1.3.3 Ikon Menu Lanjutan..... 251
5.1.3.4 Ikon Item Terkirim..... 251
5.1.3.5 Ikon Perangkat Bluetooth.....252
5.1.3.6 Indikator LED..... 253
5.1.3.7 Nada Indikator.....253
5.1.3.8 Nada Peringatan..... 254
5.1.4 Beralih Antara Mode Connect Plus dan Non-Connect Plus.....254
5.2 Melakukan dan Menerima Panggilan dalam Mode Connect Plus..... 255
5.2.1 Memilih Site..... 255
5.2.1.1 Permintaan Jelajah..... 255
5.2.1.2 Kunci Site Aktif/Nonaktif.255
5.2.1.3 Batasan Site.....256
5.2.2 Memilih Zona..... 256
5.2.3 Menggunakan Beberapa Jaringan.....257
5.2.4 Memilih Jenis Panggilan..... 257
5.2.5 Menerima dan Menjawab Panggilan Radio..... 258
5.2.5.1 Menerima dan Menjawab Panggilan Grup.....258
5.2.5.2 Menerima dan Menjawab Panggilan Pribadi..... 259
5.2.5.3 Menerima Semua Panggilan Site.....260
5.2.5.4 Menerima Panggilan Telepon Pribadi Inbound.....260
5.2.5.4.1 Melakukan Buffered Over-Dial dalam Panggilan Pribadi Telepon Inbound..... 261

5.2.5.4.2 Melakukan Live Over-Dial dalam Panggilan Pribadi Telepon Inbound..... 262

5.2.5.5 Menerima Panggilan Telepon Grup Bicara Inbound....262

5.2.5.6 Panggilan Telepon Multi-grup Inbound.....262

5.2.6 Melakukan Panggilan Radio..... 262

5.2.6.1 Melakukan Panggilan dengan Kenop Pemilih Saluran. 263

5.2.6.1.1 Melakukan Panggilan Grup..... 263

5.2.6.1.2 Melakukan Panggilan Pribadi..... 264

5.2.6.1.3 Melakukan Semua Panggilan Site.....265

5.2.6.1.4 Melakukan Panggilan Multi-grup..... 265

5.2.6.2 Melakukan Panggilan Pribadi dengan Tombol Panggilan Satu Sentuhan..... 266

5.2.6.3 Melakukan Panggilan dengan Tombol Panggil Manual yang Dapat Diprogram.....267

5.2.6.3.1 Melakukan Panggilan Pribadi..... 267

5.2.6.4 Melakukan Panggilan Telepon Pribadi Outbound dengan Tombol Pemanggil Dapat Diprogram.....267

5.2.6.5 Melakukan Panggilan Telepon Pribadi Outbound melalui Menu Telepon.....268

5.2.6.6 Melakukan Panggilan Telepon Pribadi Outbound dari Kontak.....269

5.2.6.7 Menunggu Alokasi Saluran dalam Panggilan Telepon Pribadi Outbound..... 271

5.2.6.8 Melakukan Buffered Over-Dial dalam Panggilan Telepon Pribadi Outbound Terhubung.....271

5.2.6.9 Melakukan Live Over-Dial dalam Panggilan Telepon Pribadi Outbound Terhubung.....272

5.3 Fitur Lanjutan dalam Mode Connect Plus. 273
5.3.1 Pengingat Saluran Rumah.....273
5.3.2 Fallback Otomatis..... 273
5.3.2.1 Indikasi Mode Fallback Otomatis.....274
5.3.2.2 Melakukan/Menerima Panggilan dalam Mode Fallback 274
5.3.2.3 Kembali ke Pengoperasian Normal..... 275
5.3.3 Pemeriksaan Radio..... 275
5.3.3.1 Mengirimkan Pemeriksaan Radio.....276
5.3.4 Monitor Jauh..... 277
5.3.4.1 Menginisiasi Monitor Jauh..... 277
5.3.5 Pemindaian.....278
5.3.5.1 Memulai dan Menghentikan Pemindaian..... 279
5.3.5.2 Menjawab suatu Transmisi Selama Pemindaian.. 279
5.3.6 Pemindaian yang Dapat Dikonfigurasi oleh Pengguna.....280
5.3.7 Mengaktifkan atau Menonaktifkan Pemindaian.....281
5.3.8 Mengedit Daftar Pindai..... 282
5.3.9 Menambahkan atau Menghapus Grup melalui Menu Tambah Anggota...283
5.3.10 Memahami Operasi Pemindaian 285
5.3.11 Pindai Talkback..... 286
5.3.12 Mengedit Prioritas untuk Grup Bicara.....286
5.3.13 Pengaturan Kontak.....287
5.3.13.1 Melakukan Panggilan Pribadi dari Kontak.....288
5.3.13.2 Melakukan Pencarian Alias Panggilan..... 289
5.3.13.3 Menambah Kontak Baru..... 289
5.3.14 Pengaturan Indikator Panggilan 290
5.3.14.1 Mengaktifkan dan Menonaktifkan Dering Panggilan untuk Peringatan Panggilan.....290
5.3.14.2 Mengaktifkan dan Menonaktifkan Dering Panggilan untuk Panggilan Pribadi..... 291

5.3.14.3 Mengaktifkan dan Menonaktifkan Dering Panggilan untuk Pesan Teks..... 292
5.3.14.4 Memilih Jenis Tanda Dering..... 293
5.3.14.5 Volume Nada Alarm yang Semakin Tinggi..... 293
5.3.15 Log Panggilan.....293
5.3.15.1 Melihat Panggilan Terbaru..... 294
5.3.15.2 Menghapus Panggilan dari Daftar Panggilan..... 294
5.3.15.3 Melihat Detail dari Log Panggilan..... 295
5.3.16 Operasi Peringatan Panggilan...295
5.3.16.1 Merespons Peringatan Panggilan..... 296
5.3.16.2 Membuat Peringatan Panggilan dari Daftar Kontak..... 296
5.3.16.3 Membuat Peringatan Panggilan dengan Tombol Akses Satu Sentuhan..... 297
5.3.17 Mode Bisu.....297
5.3.17.1 Mengaktifkan Mode Bisu..... 298
5.3.17.2 Menyetel Pewaktu Mode Bisu..... 298
5.3.17.3 Keluar dari Mode Bisu..299
5.3.18 Pengoperasian Darurat.....300
5.3.18.1 Menerima Darurat Masuk..... 301
5.3.18.2 Menyimpan Detail Darurat ke Daftar Alarm..... 302
5.3.18.3 Menghapus Detail Darurat..... 302
5.3.18.4 Merespons Panggilan Darurat..... 303
5.3.18.5 Merespons Peringatan Darurat..... 303
5.3.18.6 Mengabaikan Panggilan Balik Darurat..... 304
5.3.18.7 Memulai Panggilan Darurat..... 304
5.3.18.8 Memulai Panggilan Darurat dengan Suara untuk Diikuti..... 305

5.3.18.9 Memulai Peringatan Darurat..... 305
5.3.18.10 Keluar dari Mode Darurat..... 306
5.3.19 Pengolahan Pesan Teks 306
5.3.19.1 Mengirimkan Pesan Teks Cepat.....307
5.3.19.2 Mengirimkan Pesan Teks Cepat dengan Tombol Akses Satu Sentuhan..... 308
5.3.19.3 Mengakses Folder Konsep.....308
5.3.19.3.1 Melihat Pesan Teks yang Disimpan.....308
5.3.19.3.2 Mengedit dan Mengirim Pesan Teks yang Disimpan..... 309
5.3.19.3.3 Menghapus Pesan Teks yang Disimpan dari Konsep..... 310
5.3.19.4 Mengelola Pesan Teks yang Gagal Terkirim.....311
5.3.19.4.1 Mengirim Ulang Pesan Teks.....311
5.3.19.4.2 Meneruskan Pesan Teks..... 311
5.3.19.5 Mengelola Pesan Teks Terkirim..... 312
5.3.19.5.1 Melihat Pesan Teks Terkirim..... 312
5.3.19.5.2 Mengirimkan Pesan Teks Terkirim..... 313
5.3.19.5.3 Menghapus Semua Pesan Teks Terkirim dari Item Terkirim..... 314
5.3.19.6 Menerima Pesan Teks. 315
5.3.19.7 Membaca Pesan Teks. 315
5.3.19.8 Mengelola Pesan Teks yang Diterima.....315
5.3.19.8.1 Melihat Pesan Teks dari Kotak Masuk....316
5.3.19.8.2 Membalas Pesan Teks dari Kotak Masuk.....316
5.3.19.8.3 Menghapus Pesan Teks dari Kotak Masuk.....317

5.3.19.8.4 Menghapus Semua Pesan Teks dari Kotak Masuk..... 318
5.3.20 Privasi..... 319
5.3.20.1 Melakukan Panggilan dengan Privasi Diaktifkan (Acak) 321
5.3.21 Dukungan..... 321
5.3.21.1 Penonaktifan Radio.....321
5.3.21.2 Pengaktifan Radio.....323
5.3.22 Pengoperasian Bluetooth..... 326
5.3.22.1 Mengaktifkan dan Menonaktifkan Bluetooth..... 326
5.3.22.2 Mencari dan Menyambung ke Perangkat Bluetooth.....327
5.3.22.3 Mencari dan Menyambung dari Perangkat Bluetooth (Mode Dapat Ditemukan).....328
5.3.22.4 Memutuskan Sambungan dari Perangkat Bluetooth.....329
5.3.22.5 Mengalihkan Rute Audio antara Speaker Radio Internal dan Perangkat Bluetooth.....330
5.3.22.6 Melihat Detail Perangkat.....330
5.3.22.7 Menghapus Nama Perangkat.....330
5.3.22.8 Penguatan Mikrofon Bluetooth.....331
5.3.23 Lokasi Dalam Ruangan..... 331
5.3.23.1 Mengaktifkan atau Menonaktifkan Lokasi Dalam Ruangan..... 332
5.3.23.2 Mengakses Informasi Suar Lokasi Dalam Ruangan..... 333
5.3.24 Daftar Notifikasi..... 334
5.3.24.1 Mengakses Daftar Pemberitahuan.....334
5.3.25 Pengoperasian Wi-Fi..... 334
5.3.25.1 Mengaktifkan atau Menonaktifkan Wi-Fi..... 335
5.3.25.2 Mengaktifkan atau Menonaktifkan Wi-Fi dari Jarak

Jauh Menggunakan Radio Khusus (Kontrol Individu)..... 336
5.3.25.3 Mengaktifkan atau Menonaktifkan Wi-Fi dari Jarak Jauh Menggunakan Radio Khusus (Kontrol Grup)..... 337
5.3.25.4 Menghubungkan ke Titik Akses Jaringan..... 338
5.3.25.5 Memeriksa Status Koneksi Wi-Fi..... 339
5.3.25.6 Menyegarkan Daftar Jaringan..... 340
5.3.25.7 Menambahkan Jaringan..... 340
5.3.25.8 Melihat Detail Titik Akses Jaringan..... 341
5.3.25.9 Menghapus Titik Akses Jaringan..... 342
5.3.26 Utilitas..... 342
5.3.26.1 Mengaktifkan atau Menonaktifkan Nada/Peringatan Radio.....343
5.3.26.2 Mengatur Tingkat Offset Volume Peringatan Nada 343
5.3.26.3 Mengaktifkan atau Menonaktifkan Nada Izin Bicara 344
5.3.26.4 Mengaktifkan atau Menonaktifkan Nada Tanda Hidup Radio..... 345
5.3.26.5 Mengatur Tingkat Daya346
5.3.26.6 Mengubah Mode Tampilan..... 347
5.3.26.7 Menyesuaikan Kecerahan Layar.....347
5.3.26.8 Mengaktifkan atau Menonaktifkan Layar Pengantar 348
5.3.26.9 Bahasa.....349
5.3.26.10 Mengaktifkan atau Menonaktifkan Indikator LED.....349
5.3.26.11 Mengidentifikasi Jenis Kabel.....350
5.3.26.12 Pengumuman Suara..350
5.3.26.13 Pencatat Waktu Menu351
5.3.26.14 Mengaktifkan atau Menonaktifkan Klakson/Lampu..351
5.3.26.15 Mengatur Preferensi Operasi Kenop Ganda..... 352

5.3.26.16 Mik Digital AGC (Mic AGC-D)..... 353
5.3.26.17 Audio Cerdas..... 354
5.3.26.18 Mengaktifkan atau Menonaktifkan Fitur Peredam Umpan Balik Akustik..... 355
5.3.26.19 Mengaktifkan atau Menonaktifkan GNSS..... 356
5.3.26.20 Mengakses Informasi Radio Umum..... 357
5.3.26.20.1 Memeriksa Indeks Nomor Model Radio.....357
5.3.26.20.2 Memeriksa CRC File Codeplug OTA Papan Opsi..... 358
5.3.26.20.3 Menampilkan ID Site (Nomor Site)..... 358
5.3.26.20.4 Memeriksa Info Site..... 359
5.3.26.20.5 Memeriksa ID Radio.....360
5.3.26.20.6 Memeriksa Versi Firmware dan Versi Codeplug.....360
5.3.26.20.7 Memeriksa Pembaruan.....361
5.3.26.21 Melihat Detail Sertifikat Wi-Fi Enterprise..... 369
Bagian III : Sistem Lainnya.....370
6.1 Tombol Push-To-Talk..... 370
6.2 Tombol yang Dapat Diprogram..... 370
6.2.1 Fungsi Radio yang Dapat Ditetapkan.....371
6.2.2 Fungsi Utilitas atau Pengaturan yang Dapat Ditetapkan..... 374
6.2.3 Mengakses Fungsi Terprogram...374
6.3 Indikator Status.....375
6.3.1 Ikon.....375
6.3.2 Indikator LED.....382
6.3.3 Nada..... 383
6.3.3.1 Nada Indikator.....383
6.3.3.2 Nada Audio..... 383
6.4 Mode Analog Konvensional dan Digital.....384
6.5 Informasi tentang Ikon.....384

6.6 IP Site Connect.....385
6.7 Capacity Plus–Single-Site.....386
6.8 Capacity Plus–Multi-Site.....386
6.9 Pemilihan Zona dan Saluran.....387
6.9.1 Memilih Zona.....387
6.9.2 Memilih Zona Menggunakan Pencarian Alias.....388
6.9.3 Memilih Saluran.....389
6.10 Panggilan.....389
6.10.1 Panggilan Grup.....390
6.10.1.1 Melakukan Panggilan Grup.....390
6.10.1.2 Melakukan Panggilan Grup Menggunakan Daftar Kontak.....391
6.10.1.3 Melakukan Panggilan Grup Menggunakan Tombol Angka yang Dapat Diprogram 392
6.10.1.4 Merespons Panggilan Grup.....393
6.10.2 Panggilan Pribadi 394
6.10.2.1 Melakukan Panggilan Pribadi 394
6.10.2.2 Melakukan Panggilan Pribadi Menggunakan Daftar Kontak.....395
6.10.2.3 Melakukan Panggilan Pribadi Menggunakan Panggilan Manual 396
6.10.2.4 Melakukan Panggilan Pribadi Menggunakan Tombol Angka yang Dapat Diprogram 397
6.10.2.5 Merespons Panggilan Pribadi.....398
6.10.3 Semua Panggilan.....398
6.10.3.1 Menerima Semua Panggilan.....398
6.10.3.2 Melakukan Semua Panggilan.....399
6.10.3.3 Melakukan Semua Panggilan Menggunakan Tombol Angka yang Dapat Diprogram 400

6.10.4 Panggilan Selektif 401
6.10.4.1 Melakukan Panggilan Selektif..... 401
6.10.4.2 Merespons Panggilan Selektif 402
6.10.5 Panggilan Telepon 402
6.10.5.1 Melakukan Panggilan Telepon 403
6.10.5.2 Melakukan Panggilan Telepon Menggunakan Daftar Kontak 404
6.10.5.3 Melakukan Panggilan Telepon Menggunakan Panggilan Manual 407
6.10.5.4 Melakukan Panggilan Grup, Pribadi, Telepon, atau Semua Panggilan Menggunakan Pencarian Alias 410
6.10.5.5 Multi-Frekuensi Nada Ganda..... 412
6.10.5.5.1 Mengaktifkan Nada DTMF.....412
6.10.5.6 Merespons Panggilan Telepon sebagai Panggilan Grup 412
6.10.5.7 Merespons Panggilan Telepon sebagai Semua Panggilan 413
6.10.5.8 Merespons Panggilan Telepon sebagai Panggilan Pribadi 414
6.10.6 Memulai Interupsi Transmisi ..415
6.10.7 Talkaround.....415
6.10.7.1 Beralih Antara Mode Repeater dan Talkaround..... 415
6.10.8 Panggilan Suara Siaran.....416
6.10.8.1 Melakukan Panggilan Suara Siaran..... 416
6.10.8.2 Melakukan Panggilan Suara Siaran Menggunakan Tombol Angka yang Dapat Diprogram 417
6.10.8.3 Melakukan Panggilan Suara Siaran Menggunakan Pencarian Alias 417

6.10.8.4 Menerima Panggilan Suara Siaran..... 420
6.10.9 Panggilan Tidak Dialamatkan.... 420
6.10.9.1 Melakukan Panggilan Tidak Dialamatkan..... 420
6.10.9.2 Merespons Panggilan Tidak Dialamatkan..... 421
6.10.10 Mode Saluran Suara Terbuka (OVCM).....422
6.10.10.1 Melakukan Panggilan OVCM..... 422
6.10.10.2 Merespons Panggilan OVCM..... 423
6.11 Fitur Lanjutan.....424
6.11.1 Pengingat Saluran Rumah.....424
6.11.1.1 Mematikan Suara Pengingat Saluran Rumah.....424
6.11.1.2 Mengatur Saluran Rumah Baru.....425
6.11.2 Pemeriksaan Radio 425
6.11.2.1 Mengirim Pemeriksaan Radio 426
6.11.2.2 Mengirim Pemeriksaan Radio Menggunakan Panggilan Manual 426
6.11.3 Monitor Jarak Jauh..... 427
6.11.3.1 Menginisiasi Monitor Jauh..... 428
6.11.3.2 Mengaktifkan Monitor Jauh Menggunakan Daftar Kontak 429
6.11.3.3 Memulai Monitor Jauh Menggunakan Panggilan Manual 430
6.11.4 Daftar Pindai..... 431
6.11.4.1 Melihat Entri dalam Daftar Pindai..... 432
6.11.4.2 Melihat Entri dalam Daftar Pindai Menggunakan Pencarian Alias 432
6.11.4.3 Menambahkan Entri Baru ke Daftar Pindai.....433
6.11.4.4 Menambahkan Entri Baru ke Daftar Pindai Menggunakan Pencarian Alias 433

6.11.4.5 Menghapus Entri dari Daftar Pindai..... 435
6.11.4.6 Menetapkan Prioritas untuk Entri dalam Daftar Pindai. 436
6.11.5 Pemindaian.....436
6.11.5.1 Mengaktifkan atau Menonaktifkan Pemindaian.....437
6.11.5.2 Merespons Transmisi Selama Pemindaian.....438
6.11.5.3 Menghapus Saluran Gangguan..... 438
6.11.5.4 Memulihkan Saluran Gangguan..... 438
6.11.6 Vote Scan 439
6.11.7 Pengaturan Kontak.....439
6.11.7.1 Melakukan Panggilan Grup Menggunakan Daftar Kontak.....440
6.11.7.2 Melakukan Panggilan Pribadi Menggunakan Daftar Kontak.....441
6.11.7.3 Mengalokasikan Entri ke Tombol Angka yang Dapat Diprogram 442
6.11.7.4 Menghapus Kaitan Antara Entri dan Tombol Angka yang Dapat Diprogram 443
6.11.7.5 Menambahkan Kontak Baru..... 443
6.11.7.6 Mengatur Kontak Default 444
6.11.8 Pengaturan Indikator Panggilan 445
6.11.8.1 Mengaktifkan atau Menonaktifkan Dering Panggilan untuk Peringatan Panggilan.....445
6.11.8.2 Mengaktifkan atau Menonaktifkan Dering Panggilan untuk Panggilan Pribadi 446
6.11.8.3 Mengaktifkan atau Menonaktifkan Dering Panggilan untuk Panggilan Selektif 446
6.11.8.4 Mengaktifkan atau Menonaktifkan Dering Panggilan untuk Pesan Teks 447

6.11.8.5 Mengaktifkan atau Menonaktifkan Dering Panggilan untuk Status Telemetri dengan Teks..... 448
6.11.8.6 Menetapkan Gaya Dering..... 449
6.11.8.7 Volume Nada Alarm yang Semakin Tinggi..... 449
6.11.9 Fitur Log Panggilan 450
6.11.9.1 Melihat Panggilan Terbaru..... 450
6.11.9.2 Menghapus Panggilan dari Daftar Panggilan 450
6.11.9.3 Menampilkan Detail Daftar Panggilan 451
6.11.9.4 Menyimpan Alias atau ID dari Daftar Panggilan..... 452
6.11.10 Operasi Peringatan Panggilan.453
6.11.10.1 Melakukan Peringatan Panggilan.....453
6.11.10.2 Membuat Peringatan Panggilan Menggunakan Daftar Kontak.....453
6.11.10.3 Membuat Peringatan Panggilan Menggunakan Panggilan Manual..... 454
6.11.10.4 Merespons Peringatan Panggilan.....455
6.11.11 Alias Pemanggil Dinamis.....455
6.11.11.1 Menampilkan Daftar Alias Pemanggil..... 455
6.11.11.2 Memulai Panggilan Pribadi dari Daftar Alias Pemanggil.....456
6.11.12 Mode Bisu.....456
6.11.12.1 Mengaktifkan Mode Bisu.....457
6.11.12.2 Menyetel Pewaktu Mode Bisu.....457
6.11.12.3 Keluar dari Mode Bisu458
6.11.13 Pengoperasian Darurat 458
6.11.13.1 Menerima Alarm Darurat.....459
6.11.13.2 Merespons Alarm Darurat.....460

6.11.13.3 Keluar dari Mode Darurat Setelah Menerima Alarm Darurat.....461
6.11.13.4 Mengirim Alarm Darurat.....461
6.11.13.5 Mengirim Alarm Darurat dengan Panggilan.....462
6.11.13.6 Alarm Darurat dengan Suara untuk Diikuti.....464
6.11.13.7 Mengirim Alarm Darurat dengan Panduan Suara 465
6.11.13.8 Mengaktifkan Ulang Mode Darurat.....465
6.11.13.9 Keluar Mode Darurat Setelah Mengirim Alarm Darurat466
6.11.13.10 Menghapus Item Alarm dari Daftar Alarm..... 466
6.11.14 Pengolahan Pesan Teks 466
6.11.14.1 Pesan Teks 467
6.11.14.1.1 Melihat Pesan Teks..... 467
6.11.14.1.2 Melihat Pesan Teks Status Telemetri..... 467
6.11.14.1.3 Merespons Pesan Teks 468
6.11.14.1.4 Merespons Pesan Teks dengan Balasan 469
6.11.14.1.5 Mengirim Ulang Pesan Teks.....470
6.11.14.1.6 Meneruskan Pesan Teks 470
6.11.14.1.7 Meneruskan Pesan Teks Menggunakan Panggilan Manual 471
6.11.14.1.8 Mengedit Pesan Teks..... 472
6.11.14.1.9 Menulis Pesan Teks..... 473
6.11.14.1.10 Mengirim Pesan Teks..... 474

6.11.14.1.11 Menghapus Pesan Teks dari Kotak Masuk.....475
6.11.14.1.12 Menghapus Semua Pesan Teks dari Kotak Masuk 475
6.11.14.2 Pesan Teks Terkirim 476
6.11.14.2.1 Melihat Pesan Teks Terkirim ... 477
6.11.14.2.2 Mengirim Pesan Teks Terkirim ... 478
6.11.14.2.3 Menghapus Pesan Teks Terkirim dari folder Item Terkirim 478
6.11.14.2.4 Menghapus Semua Pesan Teks Terkirim dari folder Item Terkirim..... 479
6.11.14.3 Pesan SMS Tersimpan..... 479
6.11.14.3.1 Melihat Pesan Teks Tersimpan... 480
6.11.14.3.2 Mengedit Pesan Teks Tersimpan... 480
6.11.14.3.3 Menghapus Pesan Teks Tersimpan dari Folder Konsep.....481
6.11.14.4 Pesan Teks Cepat . 481
6.11.14.4.1 Mengirim Pesan Teks Cepat 482
6.11.15 Konfigurasi Entri Teks.....483
6.11.15.1 Mengaktifkan atau Menonaktifkan Koreksi Kata..... 483
6.11.15.2 Mengaktifkan atau Menonaktifkan Prediksi Kata..... 484
6.11.15.3 Kapitalisasi Kalimat....485
6.11.15.4 Melihat Kata Khusus.. 485
6.11.15.5 Mengedit Kata Khusus..... 486
6.11.15.6 Menambahkan Kata Khusus..... 487
6.11.15.7 Menghapus Kata Khusus..... 488
6.11.15.8 Menghapus Semua Kata Khusus.....489

6.11.16 Tiket Tugas..... 490
6.11.16.1 Mengakses Folder Tiket Tugas..... 491
6.11.16.2 Masuk atau Keluar dari Server Jauh.....492
6.11.16.3 Membuat Tiket Tugas 492
6.11.16.4 Merespons Tiket Tugas..... 493
6.11.16.5 Mengirim Tiket Tugas Menggunakan Satu Template Tiket Tugas..... 493
6.11.16.6 Mengirim Tiket Tugas Menggunakan Lebih Dari Satu Template Tiket Tugas..... 494
6.11.16.7 Menghapus Tiket Tugas..... 495
6.11.16.8 Menghapus Semua Tiket Tugas..... 496
6.11.17 Privasi 496
6.11.17.1 Mengaktifkan atau Menonaktifkan Privasi 497
6.11.18 Larangan Tanggapan..... 498
6.11.18.1 Menonaktifkan atau Menonaktifkan Larangan Tanggapan.....498
6.11.19 Kontrol Multi-Site 499
6.11.19.1 Mengaktifkan Pencarian Site Manual.....499
6.11.19.2 Kunci Site Aktif/ Nonaktif.....499
6.11.19.3 Mengakses Daftar Site Tetangga.....500
6.11.20 Keamanan 500
6.11.20.1 Menonaktifkan Radio 501
6.11.20.2 Menonaktifkan Radio Menggunakan Daftar Kontak . 502
6.11.20.3 Menonaktifkan Radio Menggunakan Panggilan Manual 503
6.11.20.4 Mengaktifkan Radio 504
6.11.20.5 Mengaktifkan Radio Menggunakan Daftar Kontak . 505

6.11.20.6 Mengaktifkan Radio Menggunakan Panggilan Manual 506
6.11.21 Pekerja Terpisah.....507
6.11.22 Bluetooth®..... 507
6.11.22.1 Mengaktifkan dan Menonaktifkan Bluetooth..... 508
6.11.22.2 Menghubungkan ke Perangkat Bluetooth..... 509
6.11.22.3 Menghubungkan ke Perangkat Bluetooth dalam Mode Dapat Ditemukan..... 510
6.11.22.4 Memutuskan Sambungan dari Perangkat Bluetooth.....511
6.11.22.5 Mengalihkan Rute Audio antara Speaker Radio Internal dan Perangkat Bluetooth.....512
6.11.22.6 Melihat Detail Perangkat.....512
6.11.22.7 Menghapus Nama Perangkat.....512
6.11.22.8 Penguatan Mikrofon Bluetooth.....513
6.11.23 Lokasi Dalam Ruangan..... 513
6.11.23.1 Mengaktifkan atau Menonaktifkan Lokasi Dalam Ruangan..... 514
6.11.23.2 Mengakses Informasi Suar Lokasi Dalam Ruangan..... 515
6.11.24 Daftar Notifikasi..... 516
6.11.24.1 Mengakses Daftar Notifikasi..... 516
6.11.25 Sistem Transponder Auto-Range 517
6.11.26 Pemrograman Melalui Udara 517
6.11.27 Penghambat Transmisi.....518
6.11.27.1 Mengaktifkan Penghambat Transmisi.....518
6.11.27.2 Menonaktifkan Penghambat Transmisi.....519
6.11.28 Memilih Mode Koneksi Periferal Pihak Ketiga..... 519

6.11.29 Indikator Kekuatan Sinyal Penerimaan..... 520
6.11.29.1 Melihat Nilai RSSI..... 520
6.11.30 Kunci Kata Sandi..... 520
6.11.30.1 Mengakses Radio Menggunakan Kata Sandi.....521
6.11.30.2 Membuka Kunci Radio dalam Status Terkunci.....522
6.11.30.3 Mengaktifkan atau Menonaktifkan Kunci Kata Sandi 522
6.11.30.4 Mengganti Kata Sandi523
6.11.31 Konfigurasi Panel Depan..... 524
6.11.31.1 Masuk ke Mode Konfigurasi Panel Depan..... 524
6.11.31.2 Mengedit Parameter Mode FPP 524
6.11.32 Pengoperasian Wi-Fi..... 525
6.11.32.1 Mengaktifkan atau Menonaktifkan Wi-Fi..... 526
6.11.32.2 Mengaktifkan atau Menonaktifkan Wi-Fi dari Jarak Jauh Menggunakan Radio Khusus (Kontrol Individu).....527
6.11.32.3 Mengaktifkan atau Menonaktifkan Wi-Fi dari Jarak Jauh Menggunakan Radio Khusus (Kontrol Grup)..... 528
6.11.32.4 Menghubungkan ke Titik Akses Jaringan.....529
6.11.32.5 Memeriksa Status Koneksi Wi-Fi.....530
6.11.32.6 Menyegarkan Daftar Jaringan..... 530
6.11.32.7 Menambahkan Jaringan..... 531
6.11.32.8 Melihat Detail Titik Akses Jaringan..... 532
6.11.32.9 Menghapus Titik Akses Jaringan..... 533
6.12 Utilitas.....533
6.12.1 Tingkat Redaman..... 533
6.12.1.1 Mengatur Tingkat Redaman..... 534
6.12.2 Tingkat Daya.....534
6.12.2.1 Mengatur Tingkat Daya535
6.12.3 Mengaktifkan atau Menonaktifkan Nada/Peringatan Radio 536

6.12.4 Mengaktifkan atau Menonaktifkan Nada Keypad.....536
6.12.5 Mengatur Tingkat Offset Volume Nada/Peringatan.....537
6.12.6 Mengaktifkan atau Menonaktifkan Nada Izin Bicara..... 538
6.12.7 Mengaktifkan atau Menonaktifkan Nada Penyalaan.....539
6.12.8 Mengatur Nada Peringatan Pesan Teks.....539
6.12.9 Mengubah Mode Layar.....540
6.12.10 Mengatur Kecerahan Layar..... 541
6.12.11 Mengaktifkan atau Menonaktifkan Klakson/Lampu.....541
6.12.12 Mengaktifkan atau Menonaktifkan Indikator LED.....542
6.12.13 Mengaktifkan atau Menonaktifkan Sistem Public Address. 543
6.12.14 Mengaktifkan atau Menonaktifkan Sistem Public Address Eksternal.....544
6.12.15 Mengaktifkan atau Menonaktifkan Layar Pengantar.....544
6.12.16 Mengatur Bahasa..... 545
6.12.17 Mengidentifikasi Jenis Kabel... 546
6.12.18 Transmisi Pengoperasian Suara..... 546
6.12.18.1 Mengaktifkan atau Menonaktifkan Transmisi Pengoperasian Suara..... 547
6.12.19 Mengaktifkan atau Menonaktifkan Pengumuman Suara.... 547
6.12.20 Mengaktifkan atau Menonaktifkan Papan Opsi.....548
6.12.21 Teks ke Ucapan.....548
6.12.21.1 Mengatur Teks ke Ucapan.....548
6.12.22 Mengaktifkan atau Menonaktifkan Penerusan Panggilan Otomatis..... 549
6.12.23 Mengatur Pencatat Waktu Menu.....550
6.12.24 Mengaktifkan atau Menonaktifkan AGC Mikrofon Analog...550
6.12.25 Mengaktifkan atau Menonaktifkan AGC Mikrofon Digital....551
6.12.26 Mengaktifkan atau Menonaktifkan Audio Cerdas.....552

6.12.27 Mengaktifkan atau Menonaktifkan Fitur Peredam Umpan Balik Akustik..... 553
6.12.28 Mengaktifkan atau Menonaktifkan Peningkatan Trill.....554
6.12.29 Ambien Audio..... 554
6.12.29.1 Mengatur Ambien Audio.....555
6.12.30 Profil Audio..... 555
6.12.30.1 Mengatur Profil Audio 556
6.12.31 Mengaktifkan atau Menonaktifkan Global Navigation Satellite System..... 557
6.12.32 Daftar Terima Fleksibel 557
6.12.32.1 Mengaktifkan atau Menonaktifkan Daftar Terima Fleksibel.....558
6.12.33 Informasi Umum Radio..... 558
6.12.33.1 Memeriksa Alias dan ID Radio..... 559
6.12.33.2 Memeriksa Versi Firmware dan Codeplug.....559
6.12.33.3 Memeriksa Informasi Pembaruan Perangkat Lunak.... 560
6.12.33.4 Memeriksa Informasi GNSS.....560
6.12.33.5 Menampilkan Informasi Site..... 561
6.12.34 Melihat Detail Sertifikat Wi-Fi Enterprise..... 561
Bagian IV : Daftar Aksesori Resmi..... 563

Informasi Keselamatan Penting

Panduan Pajanan Energi RF dan Keselamatan Produk untuk Radio Dua Arah Portabel

PERHATIAN:
Radio ini dibatasi hanya untuk penggunaan di Lokasi Kerja. Sebelum menggunakan radio, bacalah Panduan Pajanan Energi RF dan Keselamatan Produk untuk Radio Dua Arah Mobile yang berisi petunjuk pengoperasian penting terkait penggunaan yang aman dan kesadaran akan energi RF, serta kontrol Kepatuhan terhadap standar dan Regulasi yang berlaku.

Untuk model yang tersedia di Thailand:

อุปกรณ์โทรคมนาคมนี้ได้ปฏิบัติตามข้อกำหนดของคณะกรรมการกิจการโทรคมนาคมแห่งชาติ

Peralatan telekomunikasi ini sesuai dengan persyaratan dari Komisi Telekomunikasi Nasional.

Versi Perangkat Lunak

Semua fitur yang diuraikan di bagian berikut didukung oleh versi perangkat lunak **R02.21.01.0000** atau yang lebih baru.

Lihat Memeriksa Versi Firmware dan Codeplug di halaman 240 untuk menentukan versi perangkat lunak radio Anda.

Untuk informasi selengkapnya, hubungi dealer atau administrator Anda.

Hak Cipta

Produk Motorola Solutions yang dijelaskan dalam dokumen ini mungkin mencakup program komputer Motorola Solutions berhak cipta. Undang-undang di Amerika Serikat dan negara lain yang termasuk dalam cakupan Motorola Solutions memiliki hak eksklusif atas program komputer berhak cipta. Oleh karena itu, semua program komputer Motorola Solutions berhak cipta yang terdapat dalam produk Motorola Solutions yang diuraikan dalam manual ini dilarang disalin atau diperbanyak dengan cara apa pun tanpa persetujuan tertulis yang jelas dari Motorola Solutions.

© 2021 Motorola Solutions, Inc. Hak Cipta Dilindungi Undang-Undang

Semua atau sebagian dokumen ini dilarang diperbanyak, dikirim, disimpan dalam sistem pemulihan, atau diterjemahkan ke dalam bahasa atau bahasa komputer tertentu, dengan bentuk atau cara apa pun, tanpa persetujuan tertulis yang jelas dari Motorola Solutions, Inc.

Selanjutnya, pembelian produk Motorola Solutions tidak boleh dianggap sebagai memberikan, baik secara langsung atau secara implisit, estopel, atau cara lainnya, lisensi apa pun berdasarkan hak cipta, hak paten atau penerapan hak paten Motorola Solutions, kecuali untuk lisensi noneksklusif dan bebas royalti normal untuk penggunaan yang timbul berdasarkan hukum penjualan produk.

Sangkalan

Perlu diperhatikan bahwa beberapa fitur, fasilitas, dan kemampuan yang dijelaskan dalam dokumen ini mungkin tidak berlaku atau berlisensi untuk penggunaan pada sistem khusus, atau mungkin tergantung pada karakteristik unit subscriber mobile atau konfigurasi parameter khusus. Harap hubungi kontak Motorola Solutions untuk informasi lebih lanjut.

Merek dagang

MOTOROLA, MOTO, MOTOROLA SOLUTIONS, dan logo Stylized M merupakan merek dagang atau merek dagang terdaftar dari Motorola Trademark Holdings, LLC dan digunakan dengan lisensi. Semua merek dagang lain adalah properti pemiliknya masing-masing.

Konten Sumber Terbuka

Produk ini berisi perangkat lunak Sumber Terbuka yang digunakan berdasarkan lisensi. Rujuk ke media instalasi produk untuk mengetahui informasi Pemberitahuan Hukum Sumber Terbuka dan konten Atribusi yang lengkap.

Pedoman Limbah Peralatan Listrik dan Elektronik (WEEE) Uni Eropa (UE)

Pedoman WEEE Uni Eropa mewajibkan produk yang dijual di negara UE untuk memiliki label keranjang sampah disilang pada produk (atau kemasan pada kasus tertentu).

Seperti yang dijelaskan dalam pedoman WEEE, label keranjang sampah disilang berarti pelanggan dan pengguna akhir di negara UE tidak boleh membuang barang elektronik dan perlengkapan atau aksesori elektronik ke dalam kategori limbah rumah tangga.

Pelanggan atau pengguna akhir di negara UE harus menghubungi perwakilan pemasok perlengkapan atau pusat layanan setempat untuk informasi mengenai sistem pengumpulan limbah di negara tersebut.

Hak Cipta Perangkat Lunak Komputer

Produk Motorola Solutions yang diuraikan dalam manual ini mungkin mencakup program komputer Motorola Solutions berhak cipta yang disimpan di dalam memori semikonduktor atau media lainnya. Undang-undang di Amerika Serikat dan negara-negara lainnya melindungi hak-hak eksklusif tertentu Motorola Solutions bagi program-program komputer berhak cipta yang meliputi, tetapi tidak terbatas pada, hak eksklusif untuk menyalin dan memperbanyak dalam segala bentuk program komputer berhak cipta tersebut. Oleh karena itu, semua program komputer Motorola Solutions berhak cipta yang terdapat dalam produk Motorola Solutions yang diuraikan dalam manual ini dilarang disalin, diperbanyak, dimodifikasi, direkayasa-balik, atau disebarkan dengan cara apa pun tanpa persetujuan tertulis yang jelas dari Motorola Solutions. Selanjutnya, pembelian produk Motorola Solutions tidak boleh dianggap sebagai memberikan, baik secara langsung atau secara implisit, estopel, atau cara lainnya, lisensi apa pun berdasarkan hak cipta, hak paten atau penerapan hak paten Motorola Solutions, kecuali untuk lisensi noneksklusif normal untuk penggunaan yang timbul berdasarkan hukum penjualan produk.

Teknologi pengodean suara AMBE+2™ yang digabungkan dalam produk ini dilindungi oleh hak kekayaan intelektual termasuk hak paten, hak cipta, dan rahasia dagang Digital Voice Systems, Inc.

Teknologi pengodean suara ini hanya dilisensikan untuk penggunaan dalam Peralatan Komunikasi ini. Pengguna Teknologi ini secara tegas dilarang untuk mencoba mendekompilasi, merekayasa balik, atau membongkar Kode Objek, atau dengan cara lain apa pun mengonversi Kode Objek ini menjadi bentuk yang dapat dibaca manusia.

No. Pat. AS #5,870,405, #5,826,222, #5,754,974, #5,701,390, #5,715,365, #5,649,050, #5,630,011, #5,581,656, #5,517,511, #5,491,772, #5,247,579, #5,226,084 dan #5,195,166.

Perawatan Radio

Bagian ini mendeskripsikan langkah pengamanan untuk penanganan dasar radio.

Tabel 1 :Spesifikasi IP

Spesifikasi IP	Deskripsi
IP67	Memungkinkan radio Anda tahan terhadap kondisi yang buruk seperti terendam air.

PERHATIAN:
Jangan membongkar radio Anda. Ini dapat merusak segel radio dan mengakibatkan alur kebocoran menuju radio. Perawatan radio hanya boleh dilakukan di depot layanan yang mempunyai perlengkapan untuk menguji dan mengganti segel pada radio.

- Jika radio Anda sudah terendam di dalam air, goyang-goyangkan radio untuk membuang air yang mungkin terperangkap di dalam kisi speaker dan port mikrofon. Air yang terperangkap dapat menyebabkan kinerja audio menurun.
- Jika area kontak baterai sudah terpapar air, bersihkan dan keringkan kontak baterai baik pada radio Anda maupun baterai sebelum memasang baterai ke radio. Sisa air bisa menyebabkan hubungan pendek pada radio.
- Jika radio Anda sudah terendam di dalam bahan yang bersifat korosif (misalnya air laut), bilas radio dan baterai dengan air bersih, kemudian keringkan radio serta baterainya.
- Untuk membersihkan permukaan luar radio Anda, gunakan larutan cair detergen pencuci piring ringan dan air tawar (contohnya, satu sendok teh detergen dengan satu galon air).
- Jangan sekali-kali menusuk ventilasi (lubang) yang ada pada sasis radio di bawah kontak baterai. Ventilasi ini memungkinkan penyetaraan tekanan di dalam radio. Jika ditusuk dapat menimbulkan kebocoran pada jalur ke dalam radio Anda dan daya tahan rendam radio bisa hilang.
- Jangan sekali-kali menghalangi atau menutupi ventilasi, meskipun dengan label.
- Pastikan bahwa tidak ada bahan berminyak yang mengenai ventilasi.

- Radio Anda yang dipasangi antena dengan benar dirancang untuk bisa terendam hingga kedalaman maksimum 1 m (3,28 kaki) dan waktu perendaman maksimal 30 menit. Apabila melebihi batas maksimum atau digunakan tanpa antena maka akan dapat menyebabkan kerusakan pada radio Anda.
- Sewaktu membersihkan radio Anda, jangan gunakan semprotan jet bertekanan tinggi ke radio karena ini akan melampaui tekanan kedalaman 1 m dan dapat menyebabkan air merembes ke dalam radio.

Memulai

Bab Memulai memberikan instruksi untuk mempersiapkan radio Anda sebelum digunakan.

1.1 Mengaktifkan Radio

Tekan tombol **On/Off**.

Jika berhasil, radio Anda akan menampilkan indikasi sebagai berikut:

- Nada akan berbunyi.

  PEMBERITAHUAN:
  Jika fungsi Nada/Peringatan nonaktif, nada tidak berbunyi setelah menghidupkan.

- LED hijau menyala.
- Layar menampilkan `MOTOTRBO <TM>`, diikuti pesan atau gambar selamat datang.
- Layar Awal menyala.

Jika radio tidak menyala, periksa baterai Anda. Pastikan bahwa baterai diisi dan dipasang dengan benar. Hubungi dealer jika radio masih tidak dapat menyala.

1.2 Menonaktifkan Radio

Tekan dan tahan tombol **On/Off**.

Radio mungkin memerlukan waktu hingga tujuh detik untuk nonaktif sepenuhnya.

Layar menampilkan `Mematikan`.

1.3 Menyesuaikan Volume

Untuk mengatur volume radio, lakukan satu dari tindakan berikut:

- Untuk menaikkan volume, putar kenop **Kontrol On/Off/Volume** searah jarum jam.
- Untuk menurunkan volume, putar kenop **Kontrol On/Off/Volume** melawan arah jarum jam.

PEMBERITAHUAN:
Radio Anda dapat diprogram pada offset volume suara minimum dengan tingkat volume suara tidak dapat dikurangi melebihi volume suara minimum yang diprogram.

Kontrol Radio

Bab ini menjelaskan tombol dan fungsi untuk mengontrol radio.

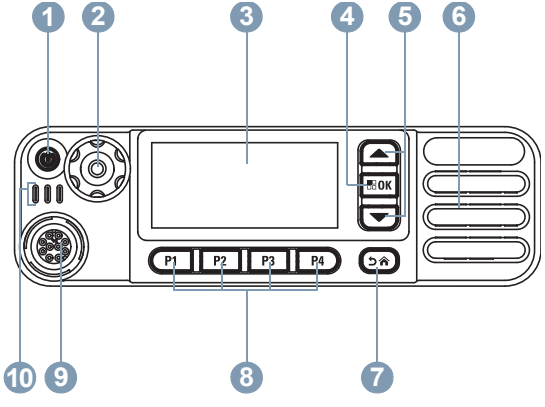

1 Tombol On/Off/Informasi

2 Kenop Volume/Saluran

3 Layar

4 Tombol Menu/OK

5 Tombol Gulir Atas/Bawah

6 Speaker

7 Tombol Kembali/Awal

8 Tombol Depan yang Dapat Diprogram

9 Konektor Aksesori

10 Indikator LED

2.1

Kenop Volume/Saluran

Kenop Volume/Saluran dapat diprogram untuk volume ganda dan kontrol saluran, atau hanya untuk kontrol volume.

Untuk menyesuaikan volume, lihat Menyesuaikan Volume di halaman 41 .

Untuk mengubah saluran, tekan dan tahan **Kenop Volume/Saluran** hingga status pemilihan saluran ditampilkan. Putar **Kenop Volume/Saluran** untuk memilih saluran. Lakukan salah satu hal berikut untuk keluar dari status pemilihan saluran:

- Tekan **Kenop Volume/Saluran**.
- Tekan OK .
- Tekan .

- Tunggu hingga waktu pewaktu menu habis.

2.1.1

Mengatur Preferensi Operasi Kenop Ganda

Ikuti prosedur untuk mengatur nada preferensi operasi kenop ganda radio.

1 Tekan OK untuk mengakses menu.

2 Tekan ▲ atau ▼ ke `Utilitas`. Tekan OK untuk memilih.

3 Tekan ▲ atau ▼ ke `Pengaturan Radio`.

Tekan OK untuk memilih.

4 Tekan ▲ atau ▼ ke `Kenop Ganda`. Tekan OK untuk memilih.

Layar akan menampilkan `Volume Saja` dan `Volume & Saluran`.

5 Tekan ▲ atau ▼ ke pengaturan yang diinginkan. Tekan OK untuk memilih.

Tanda ✔ muncul di sebelah pengaturan yang dipilih. Layar kembali ke menu sebelumnya.

2.2

Tombol Mikrofon Keypad

Anda dapat menggunakan keypad alfanumerik 3 x 4 pada Mikrofon Keypad Navigasi 4 Arah (Nomor komponen Motorola Solutions RMN5127_) untuk mengakses fitur radio. Untuk memperoleh karakter tertentu, Anda harus menekan tombol

beberapa kali. Tabel menunjukkan jumlah penekanan tombol yang diperlukan untuk memperoleh karakter yang diinginkan.

Kunci	Jumlah Penekanan Tombol												
	1	2	3	4	5	6	7	8	9	10	11	12	13
1 ,.?	1	.	,	?	!	@	&	'	%	—	:	*	#
2 ABC	A	B	C	2									
DEF 3	D	E	file	3									
4 GHI	G	H	I	4									
5 JKL	J	K	L	5									
MNO 6	M	N	O	6									

Kunci	Jumlah Penekanan Tombol												
	1	2	3	4	5	6	7	8	9	10	11	12	13
7 PQRS	P	Q	R	S	7								
8 TUV	T	U	V	8									
WXYZ 9	W	X	Y	Z	9								
0	0	**PEMBERITAHUAN:** Tekan untuk memasukkan "0" dan tekan lama untuk mengaktifkan penggunaan huruf besar. Tekan lama sekali lagi untuk mematikan CAPS lock.											
*	* atau del	**PEMBERITAHUAN:** Tekan saat mengetik teks untuk menghapus karakter. Tekan saat mengetik angka untuk memasukkan "*".											
#	# atau spasi	**PEMBERITAHUAN:** Tekan saat mengetik teks untuk memasukkan spasi. Tekan saat mengetik angka untuk memasukkan "#".											

WAVE

Wide Area Voice Environment (WAVE™) memberikan metode baru dalam melakukan panggilan antara dua radio atau lebih.

WAVE memungkinkan Anda berkomunikasi di berbagai jaringan dan perangkat dengan Wi-Fi. Panggilan WAVE dibuat jika radio terhubung ke jaringan IP network melalui Wi-Fi.

Radio Anda mendukung konfigurasi sistem yang berbeda:

- WAVE OnCloud/OnPremise
- WAVE Tactical/5000

Metode untuk memulai Panggilan WAVE berbeda untuk setiap tipe sistem. Lihat bagian yang sesuai bergantung pada konfigurasi sistem radio Anda.

Tabel 2 :Ikon Tampilan WAVE

Ikon berikut ini muncul sementara di tampilan jika WAVE diaktifkan.

	WAVE Terhubung WAVE terhubung.
	WAVE Terputus WAVE terputus.

PEMBERITAHUAN:
Fitur ini hanya tersedia untuk model tertentu.

3.1 WAVE OnCloud/OnPremise

3.1.1 Beralih dari Mode Radio ke Mode WAVE

1 Lakukan salah satu langkah berikut:
   - Tekan tombol **WAVE** terprogram. Lompati langkah-langkah berikut ini.
   - Tekan OK untuk mengakses menu.

2 Tekan ▲ atau ▼ ke WAVE. Tekan OK untuk memilih.

LED kuning berkedip ganda.

Layar menampilkan pemberitahuan singkat Beralih ke WAVE, kemudian menampilkan Menyiapkan WAVE.

PEMBERITAHUAN:
Radio secara otomatis mengaktifkan Wi-Fi setelah Anda beralih ke mode WAVE.

Jika berhasil:

- Lampu LED berwarna kuning mati.
- Layar menampilkan ikon WAVE terhubung, <Alias Grup Bicara>, dan <Indeks Saluran>.

Jika tidak berhasil:

- Sebuah nada negatif akan berbunyi.
- LED merah berkedip.
- Layar menampilkan WAVE terputus dan Tidak Ada Koneksi atau Aktivasi: Gagal, bergantung pada jenis kesalahan.

PEMBERITAHUAN:
Sinkronisasi terjadi ketika pengaturan baru diperbarui ke radio. Saat Anda masuk ke mode WAVE, radio Anda menampilkan Menyinkronkan.... Setelah sinkronisasi selesai, radio Anda akan kembali ke layar awal.

3.1.2
Melakukan Panggilan Grup WAVE

1 Gunakan kenop pemilih saluran atau tombol untuk memilih grup bicara WAVE.

2 Untuk memulai panggilan, tekan tombol **PTT**.

Jika panggilan berhasil, layar menampilkan ikon Panggilan Grup dan alias grup bicara WAVE.

Jika panggilan tidak berhasil:

- Nada indikator negatif akan berbunyi.
- Layar menampilkan pemberitahuan sementara Panggilan Gagal atau Tidak Ada Peserta.

3.1.3

Menerima dan Menjawab Panggilan Grup WAVE

Apabila Anda menerima panggilan grup WAVE:

- Nada akan berbunyi.
- Layar menampilkan ikon panggilan grup, alias grup bicara WAVE, dan alias pemanggil.
- Radio bersuara dan panggilan masuk berbunyi melalui speaker.

1 Untuk memulai panggilan, tekan tombol **PTT**.

2 Untuk mendengarkan, lepaskan tombol **PTT**.

3.1.4

Menerima dan Menjawab Panggilan Pribadi WAVE

Apabila Anda menerima panggilan pribadi WAVE:

- Nada akan berbunyi.
- Layar menampilkan ikon panggilan pribadi dan alias pemanggil.
- Radio bersuara dan panggilan masuk berbunyi melalui speaker.

1 Untuk memulai panggilan, tekan tombol **PTT**.

2 Untuk mendengarkan, lepaskan tombol **PTT**.

3.1.5

Beralih dari Mode WAVE ke Mode Radio

1 Lakukan salah satu langkah berikut:
   - Tekan tombol **Mode Radio** yang terprogram. Lompati langkah-langkah berikut ini.
   - Tekan OK untuk mengakses menu.

2 Tekan ▲ atau ▼ ke `Mode Radio`. Tekan OK untuk memilih.

LED kuning berkedip ganda.

Layar akan menampilkan pemberitahuan singkat `Beralih ke Radio` lalu menampilkan `Menyiapkan Radio`.

Jika berhasil:

- Lampu LED berwarna kuning mati.
- Ikon WAVE tersambung akan hilang pada bilah status. Layar menampilkan `<Alias Grup Bicara>` dan `<Indeks Saluran>`.

3.2

WAVE Tactical/5000

3.2.1

Mengatur Saluran WAVE Aktif

PEMBERITAHUAN:
Saluran WAVE dikonfigurasi melalui CPS. Radio secara otomatis mengaktifkan Wi-Fi dan masuk ke server WAVE setelah Anda masuk ke saluran WAVE.

1 Tekan OK untuk mengakses menu.

2 Tekan ▲ atau ▼ ke `Saluran WAVE`. Tekan OK untuk memilih.

3 Tekan ▲ atau ▼ ke saluran WAVE yang diinginkan. Tekan OK untuk memilih.

4 Tekan ▲ atau ▼ ke `Tetapkan sebagai Aktif`. Tekan OK untuk memilih.

Layar menampilkan ✓ di sebelah saluran yang dipilih.

3.2.2

Menampilkan Informasi Saluran WAVE

1 Lakukan salah satu langkah berikut:

- Tekan tombol **Daftar Saluran WAVE** yang diprogram. Lompati langkah-langkah berikut ini.
- Tekan OK untuk mengakses menu.

2 Tekan ▲ atau ▼ ke `Saluran WAVE`. Tekan OK untuk memilih.

3 Tekan ▲ atau ▼ ke saluran WAVE yang diinginkan. Tekan OK untuk memilih.

4 Tekan ▲ atau ▼ ke `Lihat Detail`. Tekan OK untuk memilih.

Layar menampilkan detail saluran WAVE.

3.2.3
Menampilkan Informasi Endpoint WAVE

1 Lakukan salah satu langkah berikut:
- Tekan tombol **Kontak** yang diprogram. Lewati ke langkah 3.
- Tekan OK untuk mengakses menu.

2 Tekan ▲ atau ▼ ke `Endpoint`. Tekan OK untuk memilih.

3 Tekan ▲ atau ▼ ke Endpoint WAVE yang diperlukan. Tekan OK untuk memilih.

4 Tekan OK untuk memilih `Tampilkan Detail`.

Layar menampilkan detail Endpoint WAVE.

3.2.4
Mengubah Konfigurasi WAVE

Ikuti prosedur untuk mengatur alamat IP server WAVE, ID pengguna, dan kata sandi.

1 Tekan OK untuk mengakses menu.

2 Tekan ▲ atau ▼ ke `Utilitas`. Tekan OK untuk memilih.

3 Tekan ▲ atau ▼ ke `Pengaturan Radio`. Tekan OK untuk memilih.

4 Tekan ▲ atau ▼ ke WAVE. Tekan OK untuk memilih.

5 Tekan OK untuk memilih Alamat Server. Tekan OK untuk mengubah alamat server. Tekan OK untuk memilih.

6 Tekan ▼ ke ID Pengguna. Tekan OK untuk mengubah ID Pengguna. Tekan OK untuk memilih.

7 Tekan ▼ ke Kata Sandi. Tekan OK untuk melihat atau mengubah kata sandi WAVE. Tekan OK untuk memilih.

8 Tekan ▼ ke Terapkan. Tekan OK untuk menerapkan semua perubahan yang dilakukan.

Layar menampilkan pemberitahuan mini positif sebelum kembali ke layar Pengaturan Radio.

3.2.5

Melakukan Panggilan Grup WAVE

1 Pilih saluran WAVE dengan alias atau ID grup yang diperlukan.

2 Tekan tombol **PTT** untuk melakukan panggilan.

LED hijau akan menyala. Baris teks pertama menampilkan ikon dan alias **Panggilan Grup**. Baris teks kedua menunjukkan alias grup WAVE.

3 Lakukan salah satu langkah berikut:

- Tunggu hingga Nada Izin Bicara selesai dan bicaralah dengan jelas ke mikrofon, jika diaktifkan.
- Tunggu hingga Sidetone **PTT** selesai dan bicaralah dengan jelas ke mikrofon, jika diaktifkan

4 Lepaskan tombol **PTT** untuk mendengarkan.

LED hijau akan menyala jika radio target merespons.Layar menampilkan ikon dan alias atau ID **Panggilan Grup**, serta alias atau ID radio yang melakukan transmisi.

5 Jika fitur Indikasi Saluran Bebas diaktifkan, nada peringatan singkat akan berbunyi saat pengguna radio yang melakukan transmisi melepaskan tombol **PTT**, yang menunjukkan saluran bebas dapat Anda gunakan untuk merespons. Tekan tombol **PTT** untuk menjawab panggilan.

Panggilan berakhir jika tidak ada aktivitas suara selama waktu yang telah ditentukan. Radio kembali ke layar sebelum Anda melakukan panggilan.

Capacity Max

Capacity Max adalah saluran kontrol MOTOTRBO berdasarkan sistem radio trunk.

Produk radio digital MOTOTRBO dipasarkan oleh Motorola Solutions terutama untuk pengguna bisnis dan industri. MOTOTRBO menggunakan standar Digital Mobile Radio (DMR) dari European Telecommunications Standards Institute (ETSI), yaitu, Time Slot Multiple Access (TDMA) dua slot, untuk mengemas suara atau data secara simultan dalam saluran 12,5 kHz (setara 6,25 kHz).

4.1

Tombol Tekan untuk Berbicara (PTT)

Tombol **PTT** memiliki dua fungsi dasar.

- Saat panggilan sedang berlangsung, tombol **PTT** memungkinkan radio untuk mengirim transmisi ke radio lain dalam panggilan. Mikrofon diaktifkan saat tombol **PTT** ditekan.
- Saat tidak sedang dalam panggilan, tombol **PTT** digunakan untuk melakukan panggilan baru.

Tekan dan tahan tombol **PTT** untuk berbicara. Lepaskan tombol **PTT** untuk mendengarkan.

Jika Nada Izin Bicara atau Sidetone **PTT** aktif, tunggu hingga nada peringatan singkat selesai diputar sebelum berbicara.

Jika fitur Indikasi Saluran Bebas di radio aktif (diprogram oleh penyalur), Anda akan mendengar nada peringatan singkat diputar pada saat radio target (radio yang menerima panggilan) melepaskan tombol **PTT**, menunjukkan bahwa saluran bebas untuk menerima tanggapan Anda.

Anda akan terus mendengar Nada Larangan Bicara jika panggilan terganggu, misalnya saat radio menerima Panggilan darurat. Anda harus melepaskan tombol **PTT**.

4.2

Tombol yang Dapat Diprogram

Tergantung pada durasi penekanan tombol, dealer dapat memprogram tombol yang dapat diprogram sebagai pintasan fungsi radio.

Tekan sebentar
Menekan dan melepas dengan cepat.

Tekan lama
Menekan dan menahan selama durasi terprogram.

PEMBERITAHUAN:
Lihat Pengoperasian Darurat di halaman 458 untuk informasi selengkapnya tentang durasi terprogram untuk tombol **Darurat**.

4.3

Fungsi Radio yang Dapat Ditetapkan

Fungsi radio berikut ini dapat dialokasikan ke tombol yang dapat diprogram oleh dealer atau administrator sistem.

Ambien Audio
Memungkinkan pengguna memilih lingkungan tempat pengoperasian radio.

Profil Audio
Memungkinkan pengguna memilih profil audio yang diinginkan.

Sakelar Audio Bluetooth®
Mengalihkan perutean audio antara speaker radio internal dan aksesori berkemampuan Bluetooth eksternal.

Hubungkan Bluetooth
Menginisiasi operasi pencarian dan sambungan Bluetooth.

Putus Sambungan Bluetooth
Menghentikan semua sambungan Bluetooth yang ada antara radio dan perangkat berkemampuan Bluetooth.

Bluetooth Dapat Ditemukan
Memungkinkan radio memasuki Mode Bluetooth Dapat Ditemukan.

Kontak
Memberikan akses langsung ke daftar Kontak.

Peringatan Panggilan
Menyediakan akses langsung ke daftar kontak untuk memilih kontak yang akan dikirimi Peringatan Panggilan.

Log Panggilan
Memilih daftar log panggilan.

Darurat
Menginisiasi atau membatalkan status darurat, tergantung pemrogramannya.

Alamat Publik (Public Address/PA) Eksternal
Mengalihkan perutean audio antara amplifier pengeras suara PA yang terhubung dan sistem PA internal radio.

Atur Ulang Saluran Home
Menyiapkan saluran home baru.

Senyapkan Pengingat Saluran Home
Mematikan suara Pengingat Saluran Home.

Lokasi Dalam Ruangan
Mengaktifkan atau menonaktifkan Lokasi Dalam Ruangan.

Audio Cerdas
Mengaktifkan atau menonaktifkan audio cerdas.

Panggilan Manual
Memulai Panggilan Pribadi dengan memasukkan ID subscriber apa pun.

Jelajah Site Manual
Memulai pencarian site secara manual.

AGC Mik
Mengaktifkan atau menonaktifkan automatic gain control (AGC) mikrofon internal.

Notifikasi
Memberikan akses langsung ke daftar Notifikasi.

Akses Satu Sentuhan
Langsung memulai Panggilan Siaran, Pribadi, Telepon atau Grup, Peringatan Panggilan, atau pesan Teks Cepat yang telah ditentukan.

Fitur Papan Opsi
Mengaktifkan atau menonaktifkan fitur papan opsi untuk saluran berkemampuan papan opsi.

Telepon
Memberikan akses langsung ke daftar Kontak Telepon.

Privasi
Mengaktifkan atau menonaktifkan privasi.

Alamat Publik (Public Address/PA)
Mengaktifkan atau menonaktifkan sistem PA internal radio.

Alias dan ID Radio
Memberikan alias dan ID radio.

Monitor Jarak Jauh
Mengaktifkan mikrofon radio target tanpa indikator apa pun.

Info Site
Menampilkan ID dan nama site Capacity Max saat ini.

Memutar pesan suara pengumuman site untuk site saat ini ketika Pengumuman Suara diaktifkan.

Kunci Site
Ketika diaktifkan, radio akan mencari site saat ini saja. Ketika dinonaktifkan, radio akan mencari site lain di samping site saat ini.

Kontrol Telemetri
Mengontrol Pin Output pada radio setempat atau yang berjarak jauh.

Pesan Teks
Memilih menu pesan teks.

Sakelar Level Prioritas Panggilan
Memungkinkan radio Anda masuk ke Level Prioritas Panggilan Tinggi/Normal.

Peningkatan Trill
Mengaktifkan atau menonaktifkan peningkatan trill.

Pengumuman Suara Aktif/Nonaktif
Mengaktifkan atau menonaktifkan pengumuman suara.

Pengumuman Suara untuk Saluran
Memutar pesan suara pengumuman zona dan saluran untuk saluran saat ini. Fungsi ini tidak tersedia jika Pengumuman Suara dinonaktifkan.

Wi-Fi
Mengaktifkan atau menonaktifkan Wi-Fi.

Pemilihan Zona
Memungkinkan pemilihan dari daftar zona.

4.4

Fungsi Utilitas atau Pengaturan yang Dapat Ditetapkan

Fungsi utilitas atau pengaturan radio berikut ini dapat ditetapkan ke tombol yang dapat diprogram.

Nada/Peringatan
Mengaktifkan atau menonaktifkan semua nada dan peringatan.

Lampu Latar
Menghidupkan atau mematikan lampu latar tampilan.

Saluran Naik/Turun
Tergantung pemrogramannya, mengubah saluran ke saluran sebelumnya atau berikutnya.

Mode Layar
Mengaktifkan atau menonaktifkan mode tampilan siang/malam hari.

Tingkat Daya

Mengganti antara tingkat kekuatan transmisi tinggi dan rendah.

4.5

Mengakses Fungsi Terprogram

Ikuti prosedur untuk mengakses fungsi-fungsi terprogram pada radio Anda.

1 Lakukan salah satu langkah berikut:

- Tekan tombol yang diprogram. Lanjutkan ke langkah 3.
- Tekan OK untuk mengakses menu.

2 Tekan ▲ atau ▼ ke fungsi menu, dan tekan OK untuk memilih fungsi atau masuk sub-menu.

3 Lakukan salah satu langkah berikut:

- Tekan untuk kembali ke layar sebelumnya.
- Tekan lama untuk kembali ke layar Awal.

Radio keluar dari menu secara otomatis setelah tidak aktif selama waktu tertentu dan kembali ke layar Awal.

Tombol Navigasi Menu juga tersedia pada mikrofon keypad. Lihat Tombol Mikrofon Keypad di halaman 43 .

4.6

Indikator Status

Bab ini menjelaskan indikator status dan nada audio yang digunakan pada radio.

4.6.1

Ikon

Liquid Crystal Display (LCD) radio Anda menampilkan status radio, entri teks, dan entri menu.

Tabel 3 :Ikon Layar

Ikon berikut ini muncul di bilah status pada bagian atas layar radio. Ikon disusun dari kiri berdasarkan kemunculan atau penggunaan, dan bersifat spesifik saluran.

	BeiDou Only Tersedia[1] Fitur BeiDou Only diaktifkan. Ikon akan terus menyala bila posisi tetap telah tersedia.
	Bluetooth Tersambung Fitur Bluetooth diaktifkan. Ikon akan menyala bila perangkat Bluetooth jauh tersambung.
	Bluetooth Tidak Tersambung Fitur Bluetooth diaktifkan, tetapi tidak ada perangkat Bluetooth jauh yang tersambung.
	DGNA Radio berada dalam Grup Bicara DGNA.
	Darurat Radio dalam mode Darurat.
	GNSS Tersedia Fitur GNSS diaktifkan. Ikon akan terus menyala bila posisi tetap telah tersedia.
	GNSS Tidak Tersedia Fitur GNSS telah diaktifkan, tetapi tidak menerima data dari satelit.
	Data Volume Tinggi Radio menerima data volume tinggi dan saluran sedang sibuk.

[1] Hanya berlaku untuk XiR M8660i/XiR M8668i/CM7668i.

	Lokasi Dalam Ruangan Tersedia[2] Status lokasi dalam ruangan aktif dan tersedia.
	Lokasi Dalam Ruangan Tidak Tersedia[2] Status lokasi dalam ruangan aktif tetapi tidak tersedia karena Bluetooth dinonaktifkan atau Beacons Scan dihentikan oleh Bluetooth.
	Mode Bisu Mode Bisu aktif dan speaker dibisukan.
	Pemberitahuan Daftar Notifikasi memiliki satu atau beberapa aktivitas yang terlewat.
	Papan Opsi Papan Opsi diaktifkan. (Hanya untuk model yang dilengkapi papan opsi)
	Papan Opsi Tidak Berfungsi Papan Opsi dinonaktifkan.

	Pencatat Waktu Penundaan Pemrograman Melalui Udara Menunjukkan waktu yang tersisa sebelum radio menyala ulang otomatis.
	Prioritas 1 Menunjukkan Grup Bicara Prioritas 1.
	Prioritas 2 Menunjukkan Grup Bicara Prioritas 2.
	Indikator Kekuatan Sinyal yang Diterima (Received Signal Strength Indicator/RSSI) Jumlah bar yang ditampilkan menunjukkan kekuatan sinyal radio. Empat bar menunjukkan sinyal terkuat. Ikon ini hanya ditampilkan saat menerima.
	Larangan Tanggapan Larangan Tanggapan aktif.

[2] Hanya berlaku untuk model dengan perangkat lunak dan perangkat keras terbaru.

	Hanya Dering Mode dering diaktifkan.
	Aman Fitur Privasi diaktifkan.
	Frekuensi Bersama Mengindikasikan radio mengunci untuk membagikan Saluran Kontrol.
	Dering Tanpa Bunyi Mode dering tanpa bunyi diaktifkan.
	Jelajah Site Fitur jelajah site diaktifkan.
	Status Menunjukkan pesan status baru.
	Nada Nonaktif Nada dinonaktifkan.
	Tidak Aman Fitur Privasi dinonaktifkan.

	Wi-Fi Sangat Baik[3] Sinyal Wi-Fi sangat baik.
	Wi-Fi Baik[3] Sinyal Wi-Fi baik.
	Wi-Fi Cukup[3] Sinyal Wi-Fi cukup.
	Wi-Fi Jelek[3] Sinyal Wi-Fi jelek.
	Wi-Fi Tidak Tersedia[3] Sinyal Wi-Fi tidak tersedia.

Tabel 4 :Ikon Menu Lanjutan

Ikon berikut ini muncul di samping item menu yang menawarkan pilihan di antara dua opsi atau sebagai indikasi bahwa ada sub-menu yang menawarkan dua opsi.

	Kotak Centang (Dicentang) Menunjukkan bahwa opsi dipilih.

[3] Hanya berlaku untuk XiR M8668i/CM7668i.

	Kotak Centang (Kosong) Menunjukkan bahwa opsi tidak dipilih.
	Kotak Hitam Penuh Menunjukkan bahwa opsi dipilih untuk item menu dengan submenu.

Tabel 5 :Ikon Perangkat Bluetooth

Ikon berikut juga ditampilkan di sebelah item dalam daftar perangkat berkemampuan Bluetooth yang tersedia untuk menunjukkan jenis perangkat.

	Perangkat Audio Bluetooth Perangkat audio berkemampuan Bluetooth, misalnya headset.
	Perangkat Data Bluetooth Perangkat data berkemampuan Bluetooth, misalnya scanner.
	Perangkat PTT Bluetooth Perangkat PTT berkemampuan Bluetooth, misalnya POD (PTT-Only Device).
	Perangkat Sensor Bluetooth[3] Perangkat sensor yang diaktifkan Bluetooth, seperti sensor gas.

Tabel 6 :Ikon Panggilan

Ikon berikut ini muncul di layar selama panggilan. Ikon ini juga ditampilkan dalam daftar Kontak untuk menunjukkan jenis alias atau ID.

	Panggilan PC Bluetooth Menunjukkan Panggilan PC Bluetooth sedang berlangsung. Dalam daftar Kontak, ini ditunjukkan sebagai alias (nama) atau ID (nomor) Panggilan PC Bluetooth.
	Prioritas Panggilan Tinggi Mengindikasikan Level Prioritas Panggilan Tinggi telah diaktifkan.
	Panggilan DGNA Menunjukkan Panggilan DGNA sedang berlangsung.

	Panggilan Pengiriman Jenis kontak Panggilan Pengiriman digunakan untuk mengirim pesan teks ke PC pengirim melalui Server Pesan Teks pihak ketiga.
	Panggilan Grup/Semua Panggilan Menunjukkan Panggilan Grup atau Semua Panggilan sedang berlangsung. Dalam daftar Kontak, ini ditunjukkan sebagai alias (nama) atau ID (nomor) grup.
	Panggilan Pribadi Menunjukkan Panggilan Pribadi sedang berlangsung. Di Daftar Kontak, ini menunjukkan alias (nama) atau ID (nomor) subscriber.
	Panggilan Telepon sebagai Panggilan Grup/Semua Panggilan Menunjukkan Panggilan Telepon sebagai Panggilan Grup atau Semua Panggilan sedang berlangsung. Dalam daftar Kontak, ini ditunjukkan sebagai alias (nama) atau ID (nomor) grup.
	Panggilan Telepon sebagai Panggilan Pribadi Menunjukkan Panggilan Telepon sebagai Panggilan Pribadi sedang berlangsung. Dalam daftar Kontak, ini ditunjukkan sebagai alias (nama) atau ID (nomor) telepon.

Tabel 7 :Ikon Tiket Tugas

Ikon berikut muncul sebentar pada layar dalam folder Tiket Tugas.

	Semua Tugas Menampilkan semua tugas tercantum.
	Tugas Baru Menampilkan tugas baru.

	Sedang Berlangsung Tugas dikirimkan. Hal ini dilihat sebelum indikasi untuk Mengirimkan Tiket Tugas Gagal atau Berhasil Terkirim.
	Gagal Terkirim Tugas tidak dapat dikirim.
	Berhasil Terkirim Tugas berhasil dikirim.
	Prioritas 1 Menunjukkan Tingkat Prioritas 1 untuk tugas.
	Prioritas 2 Menunjukkan Tingkat Prioritas 2 untuk tugas.
	Prioritas 3 Menunjukkan Tingkat Prioritas 3 untuk tugas.

Tabel 8 :Ikon Pemberitahuan Mini

Ikon berikut ini ditampilkan sekilas di layar radio setelah tindakan untuk menjalankan sebuah tugas dilakukan.

	Transmisi Gagal (Negatif) Tindakan gagal dilakukan.
	Transmisi Berhasil (Positif) Tindakan berhasil dilakukan.
	Transmisi Sedang Berlangsung (Transisional) Mentransmisikan. Ikon terlihat sebelum indikasi Transmisi Berhasil atau Transmisi Gagal.

Tabel 9 :Ikon Item Terkirim

Ikon berikut muncul di sudut kanan atas layar dalam folder Item Terkirim.

atau	**Sedang Berlangsung** Pesan teks ke alias atau ID subscriber sedang menunggu transmisi, diikuti dengan menunggu respons.

	Pesan teks ke alias atau ID grup sedang menunggu transmisi.
atau	**Pesan Terpisah atau Grup Telah Dibaca** Pesan teks telah dibaca.
atau	**Pesan Terpisah atau Grup Belum Dibaca** Pesan teks belum dibaca.
atau	**Gagal Terkirim** Pesan teks tidak bisa terkirim.
atau	**Berhasil Terkirim** Pesan teks telah berhasil dikirim.

4.6.2

Indikator LED

Indikator LED menunjukkan status operasional radio.

Merah Berkedip

Radio gagal melakukan uji mandiri saat dihidupkan.

Radio menerima transmisi darurat.

Radio melakukan transmisi dalam kondisi baterai lemah.

Radio keluar dari jangkauan jika Sistem Transponder Auto-Range dikonfigurasikan.

Mode Bisu aktif.

Hijau Tak Berkedip

Radio dalam proses dihidupkan.

Radio melakukan transmisi.

Radio sedang mengirim Peringatan Panggilan atau transmisi darurat.

Hijau Berkedip

Radio menerima panggilan atau data.

Radio mengambil transmisi Pemrograman Melalui Udara melalui udara.

Radio mendeteksi aktivitas melalui udara.

PEMBERITAHUAN:
Aktivitas ini bisa memengaruhi saluran terprogram pada radio karena sifat dari protokol digital.

Hijau Berkedip Ganda
Radio menerima panggilan atau data dengan privasi diaktifkan.

Kuning Terus
Radio dalam Mode Bluetooth Dapat Ditemukan.

Kuning Berkedip
Radio belum merespons Peringatan Panggilan.

Kuning Berkedip Ganda
Jelajah Otomatis pada radio diaktifkan.

Radio secara aktif mencari site baru.

Radio belum merespons Peringatan Panggilan Grup.

Radio terkunci.

4.6.3

Nada

Berikut ini adalah nada yang keluar melalui speaker radio.

Nada Tinggi

Nada Rendah

4.6.3.1

Nada Audio

Nada audio memberi Anda indikasi status radio yang bisa didengar atau respons radio terhadap data yang diterima.

Nada Terus Menerus
Nada monoton. Berbunyi secara terus-menerus sampai dihentikan.

Nada Berkala
Berbunyi secara berkala bergantung pada durasi yang diatur oleh radio. Nada memulai, berhenti, dan mengulang sendiri.

Nada Berulang
Nada tunggal yang berulang dengan sendirinya sampai dihentikan oleh pengguna.

Nada Sesaat

Berbunyi sekali dalam durasi singkat yang diatur oleh radio.

4.6.3.2

Nada Indikator

Nada indikator memberi petunjuk suara tentang status setelah suatu tindakan untuk menjalankan tugas dilakukan.

Nada Indikator Positif

Nada Indikator Negatif

4.7

Registrasi

Ada sejumlah pesan terkait registrasi yang mungkin Anda terima.

Melakukan registrasi

Biasanya, registrasi dikirim ke sistem selama proses menyalakan, perubahan Grup Bicara, atau selama jelajah site. Jika gagal melakukan registrasi di sebuah site, radio akan mencoba menjelajah ke site lain secara otomatis. Radio akan menghapus sementara site tempat registrasi dicoba dari daftar jelajah.

Indikasi menunjukkan bahwa radio sedang sibuk mencari site untuk dijelajahi, atau bahwa radio telah berhasil menemukan site, tetapi menunggu jawaban atas pesan registrasi dari radio.

Saat `Melakukan registrasi` ditampilkan di radio, nada akan berbunyi dan LED kuning berkedip ganda untuk menandakan pencarian site.

Jika indikasi terus ada, pengguna harus mengubah lokasi atau jika diizinkan, menjelajah ke site lain secara manual.

Di Luar Jangkauan

Radio dianggap berada di luar jangkauan jika tidak dapat mendeteksi sinyal dari sistem atau dari site saat ini. Biasanya, indikasi ini menunjukkan bahwa radio berada di luar jangkauan frekuensi radio (RF) keluar geografis.

Bila `Di Luar Jangkauan` ditampilkan di radio, nada berulang akan berbunyi dan LED merah berkedip.

Hubungi dealer atau administrator sistem jika radio masih menerima indikasi di luar jangkauan saat berada di area dengan jangkauan RF yang kuat.

Afiliasi Grup Bicara Gagal

Radio mencoba mengafiliasi ke Grup Bicara yang ditentukan di saluran atau Posisi Kenop Terpadu (UKP) selama registrasi.

Radio dengan status afiliasi gagal tidak dapat melakukan atau menerima panggilan dari Grup Bicara yang dicoba untuk diafiliasi oleh radio tersebut.

Saat radio gagal mengafiliasi dengan suatu Grup Bicara, `Alias UKP` ditampilkan di layar awal dengan latar belakang disorot.

Hubungi dealer atau administrator sistem jika radio menerima indikasi kegagalan afiliasi.

Register Ditolak

Radio menerima indikator registrasi ditolak bila proses registrasi dengan sistem tidak diterima.

Radio tidak menunjukkan alasan spesifik penolakan registrasi kepada pengguna radio. Umumnya, suatu registrasi ditolak jika operator sistem menonaktifkan akses radio tersebut ke sistem.

Bila registrasi radio ditolak, `Register Ditolak` akan ditampilkan di radio dan LED kuning berkedip ganda untuk menandakan pencarian site.

4.8

Pemilihan Zona dan Saluran

Bab ini menjelaskan pengoperasian untuk memilih zona atau saluran di radio Anda.

Radio dapat diprogram dengan maksimum 250 Zona Capacity Max dengan maksimum 160 Saluran per zona. Setiap zona Capacity Max berisi maksimum 16 posisi yang dapat dialokasikan.Setiap zona Capacity Max berisi maksimum 16 posisi yang dapat dialokasikan.

4.8.1

Memilih Zona

Ikuti prosedur untuk memilih zona yang diperlukan di radio Anda.

1 Lakukan salah satu langkah berikut:
   - Tekan tombol **Pemilihan Zona** terprogram. Lanjutkan ke langkah 3.
   - Tekan [OK] untuk mengakses menu.

2 Tekan ▲ atau ▼ ke Zona. Tekan OK untuk memilih.

Layar menampilkan ✓ dan zona saat ini.

3 Tekan ▲ atau ▼ ke zona yang diinginkan.

Tekan OK untuk memilih.

Layar sesaat menampilkan pesan <Zona> Terpilih dan kembali ke layar zona yang dipilih.

4.8.2

Memilih Zona Menggunakan Pencarian Alias

Ikuti prosedur untuk memilih zona yang diperlukan di radio Anda menggunakan pencarian alias.

1 Tekan OK untuk mengakses menu.

2 Tekan ▲ atau ▼ ke Zona. Tekan OK untuk memilih.

Layar menampilkan ✓dan zona saat ini.

3 Masukkan karakter pertama dari alias yang diinginkan.

Layar menampilkan kursor berkedip.

4 Masukkan sisa karakter dari alias yang diperlukan.

Pencarian alias peka terhadap huruf besar-kecil. Jika terdapat dua entri atau lebih dengan nama yang sama, layar akan menampilkan entri pertama yang tercantum dalam daftar.

Baris teks pertama menampilkan karakter yang Anda masukkan. Baris teks berikut ini menampilkan hasil pencarian daftar pendek.

5 Tekan OK untuk memilih.

Layar menampilkan sesaat pesan <Zona> Terpilih dan kembali ke layar zona yang dipilih.

4.8.3

Memilih Jenis Panggilan

Gunakan Kenop Pemilih Saluran untuk memilih jenis panggilan. Ini bisa jadi Panggilan Grup, Panggilan Siaran, Semua Panggilan, atau Panggilan Pribadi, bergantung pada bagaimana radio Anda diprogram. Jika Anda ubah Kenop Pemilih Saluran ke posisi berbeda (yang memiliki jenis panggilan yang telah ditetapkan), ini menyebabkan radio mendaftar ulang ke Sistem Capacity Max. Radio akan mendaftar dengan ID Talkgrup yang telah diprogram untuk posisi Kenop Pemilih Saluran jenis panggilan baru.

Radio Anda tidak beroperasi ketika dipilih ke saluran yang tidak diprogram, gunakan Kenop Pemilih Saluran untuk memilih saluran yang telah diprogram.

Setelah zona yang diinginkan ditampilkan (jika Anda memiliki beberapa zona di radio), putar Kenop Pemilih Saluran terprogram untuk memilih jenis panggilan.

4.8.4

Memilih Site

Site menyediakan jangkauan untuk area spesifik. Dalam jaringan multi-site, radio Capacity Max akan otomatis mencari site baru ketika tingkat sinyal dari site saat ini turun ke tingkat yang tak bisa diterima.

Sistem Capacity Max dapat mendukung hingga 250 site.

4.8.5

Permintaan Jelajah

Permintaan Jelajah memberi tahu radio untuk mencari site yang berbeda, meski sinyal dari site saat ini dapat diterima.

Jika tidak ada site yang tersedia:

- Layar radio menampilkan `Mencari` dan melanjutkan pencarian ke seluruh daftar site.
- Radio akan kembali ke site sebelumnya, jika site sebelumnya masih tersedia.

PEMBERITAHUAN:
Hal ini diprogram oleh dealer Anda.

Tekan tombol **Jelajah Site Manual** terprogram.

Anda mendengar nada, yang menunjukkan radio telah beralih ke site baru. Layar menampilkan `ID Site <Nomor Site>`.

4.8.6

Kunci Site Aktif/Nonaktif

Ketika diaktifkan, radio akan mencari site saat ini saja. Ketika dinonaktifkan, radio akan mencari site lain di samping site saat ini.

Tekan tombol **Kunci Site**.

Jika fungsi **Kunci Site** diaktifkan:

- Anda mendengar nada indikator positif, yang menunjukkan radio telah dikunci ke site saat ini.
- Layar akan menampilkan `Site Terkunci.`

Jika fungsi **Kunci Site** dinonaktifkan:

- Anda mendengar nada indikator negatif, menandakan bahwa radio tidak terkunci.
- Layar akan menampilkan `Site Tidak Terkunci.`

4.8.7

Batasan Site

Pada sistem Capacity Max, administrator radio Anda memiliki kemampuan untuk menentukan site jaringan mana yang boleh dan tidak boleh digunakan radio Anda.

Radio tidak perlu diprogram ulang untuk mengubah daftar site yang diperbolehkan dan tidak diperbolehkan. Jika radio Anda berupaya mendaftar ke site yang tidak diperbolehkan, radio akan menerima indikasi bahwa site ditolak. Radio kemudian mencari site jaringan yang berbeda.

Bila mengalami pembatasan site, radio Anda menampilkan `Register Ditolak` dan LED kuning berkedip ganda untuk menandakan pencarian site.

4.8.8

Trunking Site

Trunking Site hanya tersedia dengan sistem Capacity Max. Site harus dapat berkomunikasi dengan Pengontrol Trunk agar dianggap sebagai Trunking Sistem.

Jika site tidak dapat berkomunikasi dengan Pengontrol Trunk di sistem, radio akan masuk ke mode Trunking Site. Selama dalam mode Trunking Site, radio memberikan indikasi suara dan visual secara berkala untuk

menginformasikan keterbatasan fungsionalitasnya kepada pengguna.

Saat dalam mode Trunking Site, radio menampilkan `Trunking Site` dan membunyikan nada berulang.

Radio yang berada dalam mode Trunking Site masih dapat melakukan panggilan suara grup dan individu serta mengirim pesan teks ke radio lain di dalam site yang sama. Konsol suara, perekam log, gateway telepon, dan aplikasi data tidak dapat berkomunikasi dengan radio pada site tersebut.

Setelah dalam Trunking Site, radio yang terlibat dalam panggilan di sejumlah site hanya akan dapat berkomunikasi dengan radio lain di site yang sama. Komunikasi ke dan dari site lain akan terputus.

PEMBERITAHUAN:
Jika ada beberapa site yang mencakup lokasi radio saat ini dan salah satu site tersebut masuk ke Trunking Site, radio akan menjelajah ke site lain jika ada dalam jangkauan.

4.9

Panggilan

Bab ini menjelaskan pengoperasian untuk menerima, merespons, melakukan, dan menghentikan panggilan.

Anda dapat memilih alias atau ID subscriber, atau alias atau ID grup setelah memilih saluran menggunakan satu dari fitur-fitur berikut ini:

Pencarian Alias
Metode ini digunakan untuk Panggilan Grup, Pribadi, dan Semua Panggilan saja dengan mikrofon keypad.

Daftar Kontak
Metode ini memberikan akses langsung ke daftar Kontak.

Panggilan Manual (menggunakan Kontak)
Metode ini digunakan untuk Panggilan Pribadi dan Telepon saja dengan mikrofon keypad.

Tombol Angka Terprogram

Metode ini digunakan untuk Panggilan Grup, Pribadi, dan Semua Panggilan saja dengan mikrofon keypad.

PEMBERITAHUAN:
Anda hanya dapat mempunyai satu alias atau ID yang dialokasikan ke satu tombol angka, tetapi beberapa tombol angka dapat dialokasikan ke satu alias atau ID. Semua tombol angka pada mikrofon keypad dapat dialokasikan. Lihat Mengalokasikan Entri ke Tombol Angka yang Dapat Diprogram di halaman 442 untuk informasi selengkapnya.

Tekan Tombol Akses Satu Sentuhan

Metode ini hanya digunakan untuk Panggilan Grup, Pribadi, dan Telepon.

Hanya satu ID yang dapat dialokasikan ke tombol **Akses Satu Sentuhan** dengan menekan tombol yang dapat diprogram lama atau sebentar. Radio Anda bisa mempunyai beberapa tombol **Akses Satu Sentuhan** terprogram.

Tombol yang Dapat Diprogram

Metode ini digunakan untuk Panggilan Telepon saja.

Kenop Pemilih Saluran/Volume

Metode ini memilih alias atau ID subscriber, maupun alias atau ID grup secara manual.

Lampu LED menyala hijau tidak terputus ketika radio sedang mengirimkan transmisi dan berkedip ketika radio sedang menerima.

PEMBERITAHUAN:
Lampu LED menyala hijau tidak terputus ketika radio sedang mentransmisikan dan berkedip hijau dua kali ketika radio menerima panggilan dengan privasi diaktifkan.

Untuk menguraikan panggilan dengan privasi aktif, radio harus memiliki Kunci Privasi, atau Nilai Kunci dan ID Kunci yang sama (diprogram oleh dealer) seperti radio yang melakukan transmisi (radio yang mengirimkan panggilan kepada Anda).

Lihat Privasi di halaman 496 untuk informasi selengkapnya.

4.9.1
Panggilan Grup

Radio harus dikonfigurasikan sebagai bagian dari grup untuk menerima panggilan dari atau melakukan panggilan ke sekelompok pengguna.

4.9.1.1

Melakukan Panggilan Grup

Untuk melakukan panggilan ke sebuah grup pengguna, radio Anda harus dikonfigurasi sebagai bagian dari grup itu.

1 Lakukan salah satu langkah berikut:
   - Pilih saluran dengan ID atau alias grup yang aktif. Lihat Memilih Jenis Panggilan di halaman 69 .
   - Tekan tombol **Akses Satu Sentuhan** terprogram.

2 Tekan tombol **PTT** untuk melakukan panggilan.

   LED hijau akan menyala. Baris teks pertama menampilkan ikon dan alias **Panggilan Grup**.

3 Lakukan salah satu langkah berikut:
   - Tunggu hingga Nada Izin Bicara selesai dan bicaralah dengan jelas ke mikrofon, jika diaktifkan.
   - Tunggu hingga Sidetone **PTT** selesai dan bicaralah dengan jelas ke mikrofon, jika diaktifkan.

4 Lepaskan tombol **PTT** untuk mendengarkan.

   LED hijau akan menyala jika radio target merespons. Layar menampilkan ikon dan alias atau ID **Panggilan Grup**, serta alias atau ID radio yang melakukan transmisi.

5 Jika fitur Indikasi Saluran Bebas diaktifkan, nada peringatan singkat akan berbunyi saat pengguna radio yang melakukan transmisi melepaskan tombol **PTT**, yang menunjukkan saluran bebas dapat Anda gunakan untuk merespons. Tekan tombol **PTT** untuk menjawab panggilan.

   Panggilan berakhir jika tidak ada aktivitas suara selama waktu yang telah ditentukan.

   Inisiator panggilan dapat menekan untuk mengakhiri Panggilan Grup.

4.9.1.2

Melakukan Panggilan Grup Menggunakan Daftar Kontak

1 Tekan OK untuk mengakses menu.

2 Tekan ▲ atau ▼ ke Kontak. Tekan OK untuk memilih.

3 Tekan ▲ atau ▼ ke alias atau ID yang diinginkan. Tekan OK untuk memilih.

4 Tekan tombol **PTT** untuk melakukan panggilan.

LED hijau akan menyala.
Baris pertama akan menampilkan nama atau ID subscriber. Baris kedua menampilkan Panggilan Grup dan ikon **Panggilan Grup**.

5 Lakukan salah satu langkah berikut:

- Tunggu hingga Nada Izin Bicara selesai dan bicaralah dengan jelas ke mikrofon, jika diaktifkan.
- Tunggu hingga Sidetone **PTT** selesai dan bicaralah dengan jelas ke mikrofon, jika diaktifkan.

6 Lepaskan tombol **PTT** untuk mendengarkan.

LED hijau berkedip ketika ada pengguna dalam grup yang merespons. Layar menampilkan ikon dan alias atau ID **Panggilan Grup** dan alias atau ID radio yang melakukan transmisi.

7 Jika fitur Indikasi Saluran Bebas diaktifkan, nada peringatan singkat akan berbunyi saat pengguna radio yang melakukan transmisi melepaskan tombol **PTT**, yang menunjukkan saluran bebas dapat Anda gunakan untuk merespons. Tekan tombol **PTT** untuk menjawab panggilan.

Panggilan berakhir jika tidak ada aktivitas suara selama waktu yang telah ditentukan.

Anda akan mendengar nada pendek. Layar menampilkan pesan Panggilan Diakhiri.

4.9.1.3

Melakukan Panggilan Grup Menggunakan Tombol Angka yang Dapat Diprogram

Ikuti prosedur untuk melakukan Panggilan Grup di radio Anda menggunakan tombol angka yang dapat diprogram.

1 Tekan lama tombol angka terprogram ke alias atau ID yang telah ditentukan ketika Anda berada di layar Awal.

Jika sebuah tombol angka dialokasikan untuk sebuah entri dalam mode tertentu, fitur ini tidak didukung apabila Anda menekan lama tombol angka dalam mode yang lain.

Nada indikator negatif akan terdengar jika tombol angka tidak berhubungan dengan sebuah entri.

2 Tekan tombol **PTT** untuk melakukan panggilan.

LED hijau akan menyala.

3 Lepaskan tombol **PTT** untuk mendengarkan.

LED hijau berkedip ketika ada pengguna dalam grup yang merespons.

4 Jika fitur Indikasi Saluran Bebas diaktifkan, nada peringatan singkat akan berbunyi saat pengguna radio yang melakukan transmisi melepaskan tombol **PTT**, yang menunjukkan saluran bebas dapat Anda gunakan untuk merespons. Tekan tombol **PTT** untuk menjawab panggilan.

Panggilan berakhir jika tidak ada aktivitas suara selama waktu yang telah ditentukan.Radio kembali ke layar sebelum Anda melakukan panggilan.

Inisiator panggilan dapat menekan untuk mengakhiri Panggilan Grup.

Lihat Mengalokasikan Entri ke Tombol Angka yang Dapat Diprogram di halaman 442 untuk informasi selengkapnya.

4.9.1.4

Melakukan Panggilan Grup Menggunakan Pencarian Alias

Anda juga dapat menggunakan pencarian alias atau alfanumerik untuk memperoleh alias subscriber yang diperlukan. Fitur ini hanya tersedia saat dalam Kontak.

1 Tekan OK untuk mengakses menu.

2 Tekan ▲ atau ▼ ke `Kontak`. Tekan OK untuk memilih.

Layar menampilkan entri sesuai urutan abjad.

3 Tekan ▲ atau ▼ ke alias atau ID subscriber yang diinginkan. Baris pertama layar menampilkan `Nomor Telepon:`. Baris kedua layar menampilkan kursor yang berkedip. Gunakan keypad untuk memasukkan nomor telepon.

4 Tekan OK untuk memilih. Jika entri yang dipilih kosong, nada indikator negatif akan berbunyi dan layar menampilkan `Panggilan Telepon Tidak Valid #.`

5 Tekan ▲ atau ▼ untuk Memanggil Telepon dan Tekan OK untuk memilih. Jika kode akses tidak dikonfigurasi sebelumnya dalam daftar Kontak, baris pertama pada layar menampilkan `Kode Akses:`. Baris kedua layar menampilkan kursor yang berkedip. Masukkan kode akses dan tekan tombol OK untuk melanjutkan. Jika berhasil, nada DTMF terdengar. Nada panggilan dari pengguna telepon akan terdengar. Baris pertama layar menampilkan alias atau ID subscriber, dan ikon RSSI. Baris kedua layar menampilkan `Panggilan Telepon` dan ikon Panggilan Telepon. Jika tidak berhasil, nada terdengar dan layar menampilkan `Panggilan Telepon Gagal`. Radio Anda kembali ke layar input Kode Akses. Jika kode akses telah dikonfigurasi sebelumnya di daftar Kontak, radio akan kembali ke layar tempat Anda berada sebelum memulai panggilan.

6 Tekan tombol **PTT** untuk berbicara dan lepaskan untuk mendengarkan. Ikon **RSSI** tidak ditampilkan selama transmisi.

7 Untuk memasukkan digit ekstra, jika diminta oleh Panggilan Telepon, lakukan salah satu hal berikut.

- Tekan sembarang tombol keypad untuk mulai memasukkan digit ekstra. Baris pertama layar menampilkan `Digit Ekstra:`. Baris kedua layar menampilkan kursor yang berkedip. Masukkan digit ekstra dan tekan tombol OK untuk melanjutkan. Nada DTMF terdengar dan radio kembali ke layar sebelumnya.
- Tekan tombol **Akses Satu Sentuhan**. Nada DTMF akan berbunyi. Jika entri untuk tombol **Akses Satu Sentuhan** kosong, nada indikator negatif akan berbunyi.

8 Tekan untuk mengakhiri panggilan. Jika kode de-akses tidak dikonfigurasi sebelumnya dalam daftar Kontak, baris pertama layar akan menampilkan `Kode De-Akses:`. Baris kedua layar menampilkan kursor yang berkedip. Masukkan kode de-akses dan tekan OK untuk melanjutkan. Radio kembali ke layar sebelumnya. Nada DTMF berbunyi dan layar menampilkan `Mengakhiri Panggilan Telepon`. Jika berhasil, nada terdengar dan layar menampilkan Panggilan Telepon Diakhiri. Radio Anda kembali ke layar Panggilan Telepon. Jika tidak berhasil, radio Anda kembali ke layar Panggilan Telepon. Jika Anda menekan tombol **PTT** saat berada di layar Kontak Telepon, nada akan berbunyi dan layar menampilkan `Tekan OK untuk Melakukan Panggilan`. Jika pengguna telepon mengakhiri panggilan, nada berbunyi dan layar menampilkan `Panggilan Telepon Diakhiri`. Jika panggilan berakhir saat Anda memasukkan digit ekstra yang diminta oleh Panggilan Telepon, radio kembali ke layar yang dibuka sebelum Anda memulai panggilan.

9 Jika fitur Indikasi Saluran Bebas diaktifkan, nada peringatan singkat akan berbunyi saat pengguna radio yang melakukan transmisi melepaskan tombol **PTT**, yang menunjukkan saluran bebas dapat Anda gunakan untuk merespons. Tekan tombol **PTT** untuk menjawab panggilan.

Panggilan berakhir jika tidak ada aktivitas suara selama waktu yang telah ditentukan. Nada akan

berbunyi. Layar menampilkan pesan `Panggilan Diakhiri.`

Inisiator panggilan dapat menekan untuk mengakhiri Panggilan Grup.

PEMBERITAHUAN:

Selama akses saluran, tekan untuk menghentikan percobaan panggilan dan nada akan berbunyi atau untuk keluar dari pencarian alias.

Tekan tombol OK atau untuk keluar dari pencarian alias. Selama panggilan, saat Anda menekan tombol **Akses Satu Sentuhan** dengan kode de-akses yang dikonfigurasi sebelumnya atau memasukkan kode de-akses sebagai input untuk digit ekstra, radio akan mencoba mengakhiri panggilan. Saat mengakses saluran dan melakukan transmisi kode akses/de-akses atau digit ekstra, radio hanya merespons tombol On/Off, Kenop Volume, dan Pemilih Saluran. Nada akan berbunyi untuk tiap input yang tidak valid.

4.9.1.5

Merespons Panggilan Grup

Bila menerima Panggilan Grup:

- LED akan berkedip hijau.
- Layar menampilkan ikon **Panggilan Grup** di sudut kanan atas.
- Baris teks pertama menampilkan alias pemanggil.
- Baris teks kedua menunjukkan alias panggilan grup.
- Radio bersuara dan panggilan masuk berbunyi melalui speaker.

1 Lakukan salah satu langkah berikut:

- Jika fitur Indikasi Saluran Bebas diaktifkan, nada peringatan singkat akan berbunyi saat pengguna radio yang melakukan transmisi melepaskan tombol **PTT**, yang menunjukkan saluran bebas dapat Anda gunakan untuk merespons. Tekan tombol **PTT** untuk menjawab panggilan.
- Jika Interupsi Suara diaktifkan, tekan tombol **PTT** untuk menginterupsi audio dari radio yang melakukan transmisi dan membebaskan saluran sehingga Anda dapat merespons.

LED hijau akan menyala.

2 Lakukan salah satu langkah berikut:

- Tunggu hingga Nada Izin Bicara selesai dan bicaralah dengan jelas ke mikrofon, jika diaktifkan.
- Tunggu hingga Sidetone **PTT** selesai dan bicaralah dengan jelas ke mikrofon, jika diaktifkan.

3 Lepaskan tombol **PTT** untuk mendengarkan.

Panggilan berakhir jika tidak ada aktivitas suara selama waktu yang telah ditentukan.

4.9.2

Panggilan Siaran

Panggilan Siaran adalah panggilan suara satu arah dari pengguna ke seluruh grup bicara.

Fitur Panggilan Siaran memungkinkan hanya pengguna yang memulai panggilan yang melakukan transmisi ke grup bicara, sedangkan penerima panggilan tidak dapat merespons.

Pengguna yang memulai siaran juga dapat mengakhiri panggilan siaran. Untuk menerima panggilan dari sekelompok pengguna, atau untuk memanggil sekelompok pengguna, radio harus dikonfigurasi sebagai bagian dari grup.

4.9.2.1

Melakukan Panggilan Siaran

1 Lakukan salah satu langkah berikut:

- Pilih saluran dengan ID atau alias grup yang aktif. Lihat Memilih Jenis Panggilan di halaman 69 .
- Tekan tombol **Akses Satu Sentuhan** terprogram.

2 Tekan tombol **PTT** untuk melakukan panggilan.

LED hijau akan menyala. Layar menampilkan ikon dan alias **Panggilan Grup**.

3 Lakukan salah satu langkah berikut:

- Tunggu hingga Nada Izin Bicara selesai dan bicaralah dengan jelas ke mikrofon, jika diaktifkan.
- Tunggu hingga Sidetone **PTT** selesai dan bicaralah dengan jelas ke mikrofon, jika diaktifkan.

Inisiator panggilan dapat menekan untuk mengakhiri Panggilan Siaran.

4.9.2.2

Melakukan Panggilan Siaran Menggunakan Daftar Kontak

1 Tekan OK untuk mengakses menu.

2 Tekan atau ke Kontak. Tekan OK untuk memilih.

3 Tekan atau ke alias atau ID yang diinginkan. Tekan OK untuk memilih.

4 Tekan tombol **PTT** untuk melakukan panggilan.

LED akan berkedip hijau.
Baris pertama akan menampilkan nama atau ID subscriber. Baris kedua menampilkan Panggilan Grup dan ikon **Panggilan Grup**.

5 Lakukan salah satu langkah berikut:

- Tunggu hingga Nada Izin Bicara selesai dan bicaralah dengan jelas ke mikrofon, jika diaktifkan.
- Tunggu hingga Sidetone **PTT** selesai dan bicaralah dengan jelas ke mikrofon, jika diaktifkan.

Inisiator panggilan dapat menekan untuk mengakhiri Panggilan Siaran.

4.9.2.3

Melakukan Panggilan Siaran Menggunakan Tombol Angka yang Dapat Diprogram

Ikuti prosedur untuk melakukan Panggilan Siaran di radio Anda menggunakan tombol angka yang dapat diprogram.

1 Tekan lama tombol angka terprogram ke alias atau ID yang telah ditentukan ketika Anda berada di layar Awal.

Jika sebuah tombol angka dialokasikan untuk sebuah entri dalam mode tertentu, fitur ini tidak

didukung apabila Anda menekan lama tombol angka dalam mode yang lain.

Nada indikator negatif akan terdengar jika tombol angka tidak berhubungan dengan sebuah entri.

2 Tekan tombol **PTT** untuk melakukan panggilan.

LED hijau akan menyala.Layar menampilkan ikon **Panggilan Grup** di sudut kanan atas. Baris teks pertama menampilkan alias pemanggil.

3 Lakukan salah satu langkah berikut:

- Tunggu hingga Nada Izin Bicara selesai dan bicaralah dengan jelas ke mikrofon, jika diaktifkan.
- Tunggu hingga Sidetone **PTT** selesai dan bicaralah dengan jelas ke mikrofon, jika diaktifkan.

Inisiator panggilan dapat menekan untuk mengakhiri Panggilan Siaran.

4.9.2.4

Menerima Panggilan Siaran

Ikuti prosedur untuk menerima Panggilan Siaran di radio Anda.

Apabila Anda menerima Panggilan Siaran:

- LED akan berkedip hijau.
- Layar menampilkan ikon **Panggilan Grup** di sudut kanan atas.
- Baris teks pertama menampilkan alias pemanggil.
- Baris teks kedua menampilkan alias panggilan grup.

- Radio bersuara dan panggilan masuk berbunyi melalui speaker.

PEMBERITAHUAN:
Pengguna penerima tidak diizinkan melakukan Talkback selama Panggilan Siaran. Layar menampilkan `Talkback Dilarang`. Nada Dilarang Talkback akan berbunyi sesaat jika tombol **PTT** ditekan selama Panggilan Siaran.

4.9.3

Panggilan Pribadi

Panggilan Pribadi adalah sebuah panggilan dari radio perorangan ke radio perorangan lainnya.

Ada dua cara untuk menyiapkan Panggilan Pribadi.

- Jenis yang pertama disebut Penyiapan Panggilan Off Air (OACSU). OACSU menyiapkan panggilan setelah melakukan pemeriksaan kehadiran radio dan melakukan panggilan secara otomatis.
- Jenis yang kedua disebut Penyiapan Panggilan Off Air Penuh (FOACSU). FOACSU juga menyiapkan panggilan setelah melakukan pemeriksaan kehadiran radio. Namun demikian, panggilan FOACSU memerlukan respons pengguna untuk melakukan panggilan dan mengizinkan pengguna Menerima atau Menolak panggilan.

Jenis panggilan dikonfigurasi oleh administrator sistem.

PEMBERITAHUAN:
Pemanggil dan penerima panggilan dapat memutus Panggilan Pribadi yang sedang berlangsung dengan menekan .

4.9.3.1

Melakukan Panggilan Pribadi

Radio Anda harus diprogram sebelum Anda memulai Panggilan Pribadi. Jika fitur tidak diaktifkan, nada indikator negatif berbunyi ketika Anda memulai panggilan.Jika radio target tidak tersedia, nada pendek akan berbunyi dan layar menampilkan `Pihak Tidak Tersedia`.

1 Lakukan salah satu langkah berikut:
   - Pilih saluran dengan ID atau alias subscriber yang aktif. Lihat Memilih Jenis Panggilan di halaman 69 .
   - Tekan tombol **Akses Satu Sentuhan** terprogram.

2 Tekan tombol **PTT** untuk melakukan panggilan.

LED hijau akan menyala. Layar menampilkan ikon **Panggilan Pribadi**, alias subscriber, dan status panggilan.

3 Tunggu hingga Nada Izin Bicara selesai dan bicaralah dengan jelas ke mikrofon, jika diaktifkan.

4 Lepaskan tombol **PTT** untuk mendengarkan.

LED hijau akan menyala jika radio target merespons.

5 Panggilan berakhir jika tidak ada aktivitas suara selama waktu yang telah ditentukan. Anda akan mendengar nada pendek.Layar menampilkan `Panggilan Diakhiri.`

Pemanggil dan penerima panggilan dapat memutus Panggilan Pribadi yang sedang berlangsung dengan menekan .

4.9.3.2

Melakukan Panggilan Pribadi Menggunakan Tombol Angka yang Dapat Diprogram

Ikuti prosedur untuk melakukan Panggilan Pribadi di radio Anda menggunakan tombol angka yang dapat diprogram.

1 Tekan lama tombol angka terprogram ke alias atau ID yang telah ditentukan ketika Anda berada di layar Awal.

Jika sebuah tombol angka dialokasikan untuk sebuah entri dalam mode tertentu, fitur ini tidak didukung apabila Anda menekan lama tombol angka dalam mode yang lain.

Nada indikator negatif akan terdengar jika tombol angka tidak berhubungan dengan sebuah entri.

2 Tekan tombol **PTT** untuk melakukan panggilan.

LED hijau akan menyala. Layar menampilkan ikon **Panggilan Pribadi**, ID atau alias subscriber, dan status panggilan.

3 Lepaskan tombol **PTT** untuk mendengarkan.

LED hijau akan berkedip jika radio target merespons. Layar menampilkan alias tujuan.

4 Panggilan berakhir jika tidak ada aktivitas suara selama waktu yang telah ditentukan. Anda akan mendengar nada pendek. Layar menampilkan pesan `Panggilan Diakhiri.`

Pemanggil dan penerima panggilan dapat memutus Panggilan Pribadi yang sedang berlangsung dengan menekan .

Lihat Mengalokasikan Entri ke Tombol Angka yang Dapat Diprogram di halaman 442 untuk informasi selengkapnya.

4.9.3.3

Melakukan Panggilan Pribadi Menggunakan Pencarian Alias

1 Tekan OK untuk mengakses menu.

2 Tekan atau ke `Kontak`. Tekan OK untuk memilih.

Layar menampilkan entri sesuai urutan abjad.

3 Tekan atau ke alias atau ID subscriber yang diinginkan. Baris pertama layar menampilkan `Nomor Telepon:`. Baris kedua layar menampilkan kursor yang berkedip. Gunakan keypad untuk memasukkan nomor telepon.

4 Tekan OK untuk memilih. Jika entri yang dipilih kosong, nada indikator negatif akan berbunyi dan layar menampilkan `Panggilan Telepon Tidak Valid #`.

5 Tekan atau untuk Memanggil Telepon dan Tekan OK untuk memilih. Jika kode akses tidak dikonfigurasi sebelumnya dalam daftar Kontak, baris pertama pada layar menampilkan `Kode Akses:`. Baris kedua layar menampilkan kursor yang berkedip. Masukkan kode akses dan tekan tombol OK untuk melanjutkan. Jika berhasil, nada DTMF

terdengar. Nada panggilan dari pengguna telepon akan terdengar. Baris pertama layar menampilkan alias atau ID subscriber, dan ikon **RSSI**. Baris kedua layar menampilkan `Panggilan Telepon` dan ikon **Panggilan Telepon**. Jika tidak berhasil, nada terdengar dan layar menampilkan `Panggilan Telepon Gagal`. Radio Anda kembali ke layar input Kode Akses. Jika kode akses telah dikonfigurasi sebelumnya di daftar Kontak, radio akan kembali ke layar tempat Anda berada sebelum memulai panggilan.

6 Tekan tombol **PTT** untuk berbicara dan lepaskan untuk mendengarkan. Ikon **RSSI** tidak ditampilkan selama transmisi.

7 Untuk memasukkan digit ekstra, jika diminta oleh Panggilan Telepon, lakukan salah satu hal berikut.

- Tekan sembarang tombol keypad untuk mulai memasukkan digit ekstra. Baris pertama layar menampilkan `Digit Ekstra:`. Baris kedua layar menampilkan kursor yang berkedip. Masukkan digit ekstra dan tekan tombol OK untuk melanjutkan. Nada DTMF terdengar dan radio kembali ke layar sebelumnya.
- Tekan tombol **Akses Satu Sentuhan**. Nada DTMF akan berbunyi. Jika entri untuk tombol **Akses Satu Sentuhan** kosong, nada indikator negatif akan berbunyi.

8 Tekan untuk mengakhiri panggilan. Jika kode de-akses tidak dikonfigurasi sebelumnya dalam daftar Kontak, baris pertama layar akan menampilkan `Kode De-Akses:`. Baris kedua layar menampilkan kursor yang berkedip. Masukkan kode de-akses dan tekan OK untuk melanjutkan. Radio kembali ke layar sebelumnya. Nada DTMF berbunyi dan layar menampilkan `Mengakhiri Panggilan Telepon`. Jika berhasil, nada terdengar dan layar menampilkan `Panggilan Telepon Diakhiri.` Radio Anda kembali ke layar Panggilan Telepon. Jika tidak berhasil, radio Anda kembali ke layar Panggilan Telepon. Jika Anda menekan tombol **PTT** saat berada di layar Kontak Telepon, nada akan berbunyi dan layar menampilkan `Tekan OK untuk Melakukan Panggilan`. Jika pengguna telepon mengakhiri panggilan, nada berbunyi dan layar menampilkan `Panggilan Telepon Diakhiri`. Jika panggilan berakhir saat Anda memasukkan digit ekstra yang diminta oleh Panggilan Telepon, radio

kembali ke layar yang dibuka sebelum Anda memulai panggilan.

9 Panggilan berakhir jika tidak ada aktivitas suara selama waktu yang telah ditentukan. Anda akan mendengar nada pendek. Layar menampilkan pesan `Panggilan Diakhiri.`

Pemanggil dan penerima panggilan dapat memutus Panggilan Pribadi yang sedang berlangsung dengan menekan .

PEMBERITAHUAN:

Selama akses saluran, tekan untuk menghentikan percobaan panggilan dan nada akan berbunyi atau untuk keluar dari pencarian alias.

Tekan tombol OK atau untuk keluar dari pencarian alias. Selama panggilan, saat Anda menekan tombol **Akses Satu Sentuhan** dengan kode de-akses yang dikonfigurasi sebelumnya atau memasukkan kode de-akses sebagai input untuk digit ekstra, radio akan mencoba mengakhiri panggilan.

4.9.3.4

Melakukan Panggilan Pribadi dengan Tombol Panggilan Satu Sentuhan

Fitur Panggilan Satu Sentuhan memungkinkan Anda untuk melakukan Panggilan Pribadi dengan mudah ke alias Panggilan Pribadi atau ID yang sudah ditentukan. Fitur ini dapat ditetapkan untuk tombol yang dapat diprogram dengan menekan singkat atau lama.

Anda hanya dapat menetapkan satu alias atau ID ke tombol Panggilan Satu Sentuhan. Radio Anda dapat memiliki beberapa tombol Panggilan Satu Sentuhan yang diprogram.

1 Tekan tombol **Panggilan Satu Sentuhan** untuk melakukan Panggilan Pribadi ke alias atau ID Panggilan Pribadi yang telah ditentukan sebelumnya.

2 Tekan tombol **PTT** untuk melakukan panggilan.

Lampu LED menyala hijau tak berkedip.

Layar akan menampilkan alias atau ID Panggilan Pribadi.

3 Tunggu hingga Nada Izin Bicara selesai (jika diaktifkan) dan bicaralah dengan jelas ke mikrofon.

4 Lepaskan tombol **PTT** untuk mendengarkan.

Ketika radio target menjawab, LED berkedip hijau.

Jika tidak ada aktivitas suara selama jangka waktu yang telah ditentukan, panggilan akan berakhir.

Pemanggil dan penerima panggilan dapat memutus Panggilan Pribadi yang sedang berlangsung dengan menekan .

4.9.3.5

Melakukan Panggilan Pribadi Menggunakan Panggilan Manual

1 Tekan OK untuk mengakses menu.

2 Tekan atau ke Kontak. Tekan OK untuk memilih.

3 Tekan atau ke Panggilan Manual. Tekan OK untuk memilih.

4 Tekan atau ke Nomor Radio. Tekan OK untuk memilih.

5 Lakukan salah satu langkah berikut:

- Masukkan ID subscriber, lalu tekan OK untuk melanjutkan.
- Edit ID subscriber yang dipanggil sebelumnya, lalu tekan OK untuk melanjutkan.

6 Tekan tombol **PTT** untuk melakukan panggilan.

LED hijau akan menyala. Layar menampilkan alias tujuan.

7 Tunggu hingga Nada Izin Bicara selesai dan bicaralah dengan jelas ke mikrofon, jika diaktifkan.

8 Lepaskan tombol **PTT** untuk mendengarkan.

LED hijau akan menyala jika radio target merespons. Layar akan menampilkan alias atau ID pengguna yang melakukan transmisi.

9 Jika fitur Indikasi Saluran Bebas diaktifkan, nada peringatan singkat akan berbunyi saat pengguna radio yang melakukan transmisi melepaskan tombol **PTT**, yang menunjukkan saluran bebas dapat Anda gunakan untuk merespons. Tekan tombol **PTT** untuk menjawab panggilan.

Panggilan berakhir jika tidak ada aktivitas suara selama waktu yang telah ditentukan. Nada akan berbunyi. Layar menampilkan pesan `Panggilan Diakhiri`.

Pemanggil dan penerima panggilan dapat memutus Panggilan Pribadi yang sedang berlangsung dengan menekan .

4.9.3.6

Menerima Panggilan Pribadi

Bila menerima Panggilan Pribadi yang dikonfigurasi sebagai Penyiapan Panggilan Off Air (OACSU):

- LED akan berkedip hijau.
- Radio bersuara dan panggilan masuk berbunyi melalui speaker.

PEMBERITAHUAN:
Bergantung pada bagaimana radio Anda dikonfigurasi, apakah OACSU atau Penyiapan Panggilan Off Air Penuh (FOACSU), merespons Panggilan Pribadi mungkin memerlukan respons pengguna atau tidak.

Untuk konfigurasi OACSU, radio Anda tidak mematikan suara dan panggilan terhubung secara otomatis.

4.9.3.7

Menerima Panggilan Pribadi

Bila menerima Panggilan Pribadi yang dikonfigurasi sebagai Penyiapan Panggilan Off Air Penuh (FOACSU):

- LED akan berkedip hijau.

1 Untuk menerima Panggilan Pribadi yang dikonfigurasi sebagai FOACSU, lakukan salah satu hal berikut:

   - Tekan ▲ atau ▼ ke `Terima` dan tekan OK untuk menjawab Panggilan Pribadi.
   - Tekan tombol **PTT** pada entri apa pun.

   LED hijau akan menyala.

2 Tunggu hingga Nada Izin Bicara selesai dan bicaralah dengan jelas ke mikrofon, jika diaktifkan.

3 Lepaskan tombol **PTT** untuk mendengarkan.

   Panggilan berakhir jika tidak ada aktivitas suara selama waktu yang telah ditentukan. Nada akan berbunyi. Layar menampilkan pesan `Panggilan Diakhiri`.

   PEMBERITAHUAN:
   Pemanggil dan penerima panggilan dapat memutus Panggilan Pribadi yang sedang berlangsung dengan menekan ⏻ .

4.9.3.8
Menolak Panggilan Pribadi

Bila menerima Panggilan Pribadi yang dikonfigurasi sebagai Penyiapan Panggilan Off Air Penuh (FOACSU):

- LED akan berkedip hijau.

  Untuk menolak Panggilan Pribadi yang dikonfigurasi sebagai FOACSU, lakukan salah satu hal berikut:

  - Tekan ▲ atau ▼ ke `Tolak` dan tekan OK untuk menolak Panggilan Pribadi.
  - Tekan ⏻ untuk menolak Panggilan Pribadi.

4.9.4
Semua Panggilan

Semua Panggilan adalah panggilan dari radio individu ke setiap radio di site atau setiap radio di sekelompok site, tergantung konfigurasi sistemnya.

Semua Panggilan digunakan untuk melakukan pengumuman penting yang memerlukan perhatian penuh dari pengguna. Pengguna pada sistem ini tidak dapat merespons Semua Panggilan.

Capacity Max mendukung Semua Panggilan Site dan Semua Panggilan Multi-site. Administrator sistem dapat mengonfigurasi salah satu atau keduanya di radio Anda.

PEMBERITAHUAN:
Subscriber dapat mendukung Semua Panggilan Tingkat Sistem, tetapi infrastruktur Motorola Solutions tidak mendukung Semua Panggilan Tingkat Sistem.

4.9.4.1

Melakukan Semua Panggilan

Radio harus diprogram sebelum Anda dapat melakukan Semua Panggilan.

1 Pilih saluran dengan ID atau alias grup Semua Panggilan yang aktif. Lihat Memilih Jenis Panggilan di halaman 69 .

2 Tekan tombol **PTT** untuk melakukan panggilan.

LED hijau akan menyala. Layar menampilkan ikon **Panggilan Grup** dan `Semua Panggilan`, `Semua Panggilan Site`, atau `Panggilan Multisite`, bergantung pada jenis konfigurasinya.

3 Lakukan salah satu langkah berikut:

- Tunggu hingga Nada Izin Bicara selesai dan bicaralah dengan jelas ke mikrofon, jika diaktifkan.
- Tunggu hingga Sidetone **PTT** selesai dan bicaralah dengan jelas ke mikrofon, jika diaktifkan.

Pengguna pada saluran ini tidak bisa menjawab Semua Panggilan.

Inisiator panggilan dapat menekan untuk mengakhiri Semua Panggilan.

4.9.4.2

Melakukan Semua Panggilan Menggunakan Tombol Angka yang Dapat Diprogram

Ikuti prosedur untuk melakukan Semua Panggilan di radio Anda menggunakan tombol angka yang dapat diprogram.

1 Tekan lama tombol angka terprogram yang dialokasikan ke alias atau ID yang telah ditentukan ketika Anda berada di layar Awal.

Jika sebuah tombol angka dialokasikan untuk sebuah entri dalam mode tertentu, fitur ini tidak didukung apabila Anda menekan lama tombol angka dalam mode yang lain.

Nada indikator negatif akan terdengar jika tombol angka tidak berhubungan dengan sebuah entri.

2 Tekan tombol **PTT** untuk melakukan panggilan.

LED hijau akan menyala.Layar menampilkan ikon **Panggilan Grup** dan `Semua Panggilan`, `Semua Panggilan Site`, atau `Panggilan Multisite` tergantung jenis konfigurasinya.

3 Lakukan salah satu langkah berikut:

- Tunggu hingga Nada Izin Bicara selesai dan bicaralah dengan jelas ke mikrofon, jika diaktifkan.
- Tunggu hingga Sidetone **PTT** selesai dan bicaralah dengan jelas ke mikrofon, jika diaktifkan.

Inisiator panggilan dapat menekan untuk mengakhiri Semua Panggilan.

Lihat Mengalokasikan Entri ke Tombol Angka yang Dapat Diprogram di halaman 442 untuk informasi selengkapnya.

4.9.4.3

Melakukan Semua Panggilan Menggunakan Pencarian Alias

1 Tekan OK untuk mengakses menu.

2 Tekan atau ke `Kontak`. Tekan OK untuk memilih.

Layar menampilkan entri sesuai urutan abjad.

3 Tekan atau ke alias atau ID subscriber yang diinginkan. Baris pertama layar menampilkan `Nomor Telepon:`. Baris kedua layar menampilkan kursor yang berkedip. Gunakan keypad untuk memasukkan nomor telepon.

4 Tekan OK untuk memilih. Jika entri yang dipilih kosong, nada indikator negatif akan berbunyi dan

layar menampilkan `Panggilan Telepon Tidak Valid #`.

5 Tekan ▲ atau ▼ ke Panggilan Telepon.

Tekan OK untuk memilih. Jika kode akses tidak dikonfigurasi sebelumnya dalam daftar Kontak, baris pertama layar akan menampilkan `Kode Akses:`. Baris kedua layar menampilkan kursor yang berkedip. Masukkan kode akses dan tekan tombol

OK untuk melanjutkan. Jika berhasil, nada DTMF terdengar. Nada panggilan dari pengguna telepon akan terdengar. Baris pertama layar menampilkan alias atau ID subscriber, dan ikon RSSI. Baris kedua layar menampilkan `Panggil Telepon` dan ikon Panggilan Telepon. Jika tidak berhasil, nada terdengar dan layar menampilkan `Panggilan Telepon Gagal`. Radio Anda kembali ke layar input Kode Akses. Jika kode akses telah dikonfigurasi sebelumnya di daftar Kontak, radio akan kembali ke layar tempat Anda berada sebelum memulai panggilan.

6 Tekan tombol **PTT** untuk berbicara dan lepaskan untuk mendengarkan. Ikon RSSI tidak ditampilkan selama transmisi.

7 Untuk memasukkan digit ekstra, jika diminta oleh Panggilan Telepon, lakukan salah satu hal berikut.

- Tekan sembarang tombol keypad untuk mulai memasukkan digit ekstra. Baris pertama layar menampilkan `Digit Ekstra:`. Baris kedua layar menampilkan kursor yang berkedip. Masukkan digit ekstra dan tekan tombol OK untuk melanjutkan. Nada DTMF terdengar dan radio kembali ke layar sebelumnya.
- Tekan tombol **Akses Satu Sentuhan**. Nada DTMF akan berbunyi. Jika entri untuk tombol **Akses Satu Sentuhan** kosong, nada indikator negatif akan berbunyi.

8 Tekan untuk mengakhiri panggilan. Jika kode de-akses tidak dikonfigurasi sebelumnya dalam daftar Kontak, baris pertama layar akan menampilkan `Kode De-Akses:`. Baris kedua layar menampilkan kursor yang berkedip. Masukkan kode de-akses dan tekan OK untuk melanjutkan. Radio

kembali ke layar sebelumnya. Nada DTMF berbunyi dan layar menampilkan `Mengakhiri Panggilan Telepon`. Jika berhasil, nada terdengar dan layar menampilkan Panggilan Telepon Diakhiri. Radio Anda kembali ke layar Panggilan Telepon. Jika tidak berhasil, radio Anda kembali ke layar Panggilan Telepon. Jika Anda menekan tombol **PTT** saat berada di layar Kontak Telepon, nada akan berbunyi dan layar menampilkan `Tekan OK untuk Melakukan Panggilan`. Jika pengguna telepon mengakhiri panggilan, nada berbunyi dan layar menampilkan `dan layar menampilkan Panggilan Telepon Diakhiri`. Jika panggilan berakhir saat Anda memasukkan digit ekstra yang diminta oleh Panggilan Telepon, radio kembali ke layar yang dibuka sebelum Anda memulai panggilan.

PEMBERITAHUAN:

Inisiator panggilan dapat menekan untuk mengakhiri Semua Panggilan.

4.9.4.4

Menerima Semua Panggilan

Bila Anda menerima Semua Panggilan, hal berikut akan terjadi:

- Nada akan berbunyi.
- LED akan berkedip hijau.
- Layar menampilkan ikon **Panggilan Grup** di sudut kanan atas.
- Baris teks pertama menampilkan ID alias pemanggil.
- Baris teks kedua menampilkan `Semua Panggilan`, `Semua Panggilan Site`, atau `Panggilan Multisite` tergantung pada jenis konfigurasi.
- Radio bersuara dan panggilan masuk berbunyi melalui speaker.

Ketika panggilan berakhir, radio kembali ke layar sebelum menerima Semua Panggilan.

Jika fitur Indikasi Saluran Bebas diaktifkan, Anda akan mendengar nada peringatan singkat pada saat radio yang melakukan transmisi melepaskan tombol **PTT**, yang menunjukkan bahwa saluran sudah bebas untuk Anda gunakan. Anda tidak bisa menjawab Semua Panggilan.

PEMBERITAHUAN:
Radio berhenti menerima Semua Panggilan jika Anda beralih ke saluran lain ketika menerima panggilan tersebut. Selama Semua Panggilan, Anda tidak dapat melanjutkan navigasi menu atau mengedit sampai panggilan berakhir.

4.9.5

Panggilan Telepon

Panggilan Telepon adalah panggilan antara radio individual atau sekelompok radio dan sebuah telepon.

Tergantung pada bagaimana radio dikonfigurasikan, fitur berikut mungkin bisa disediakan atau tidak:

- Kode akses
- Nada Dual Tone Multi Frequency (DTMF)
- Kode de-akses
- Menampilkan alias pemanggil atau ID saat menerima panggilan telepon
- Kemampuan untuk menolak atau menerima panggilan telepon

Kemampuan Panggilan Telepon dapat diaktifkan dengan menetapkan dan menyiapkan nomor telepon di sistem. Tanyakan kepada administrator sistem Anda untuk mengetahui bagaimana radio Anda diprogram.

4.9.5.1

Melakukan Panggilan Telepon

Ikuti prosedur untuk melakukan Panggilan Telepon di radio Anda.

1 Tekan tombol **Akses Satu Sentuhan** terprogram ke alias atau ID yang telah ditentukan.

Jika entri untuk tombol **Akses Satu Sentuhan** kosong, nada indikator negatif akan berbunyi.

Jika kode akses tidak dikonfigurasi sebelumnya dalam Daftar Kontak, layar akan menampilkan `Kode Akses:`.

2 Masukkan kode akses, lalu tekan [OK] untuk melanjutkan.

Kode akses atau de-akses tidak boleh lebih dari 10 karakter.

3 Tekan tombol **PTT** untuk menjawab panggilan.

4 Lepaskan tombol **PTT** untuk mendengarkan.

5 Masukkan digit ekstra dengan keypad jika diminta oleh panggilan, lalu tekan [OK] untuk melanjutkan.

Jika panggilan berakhir saat Anda memasukkan digit ekstra yang diminta oleh panggilan, radio kembali ke layar yang dibuka sebelum Anda memulai panggilan.

Nada DTMF akan berbunyi. Radio kembali ke layar sebelumnya.

6 Tekan untuk mengakhiri panggilan.

7 Lakukan salah satu langkah berikut:

- Jika kode de-akses belum dikonfigurasikan, masukkan kode de-akses ketika layar menampilkan `Kode De-Akses:`, lalu tekan OK untuk melanjutkan. Radio kembali ke layar sebelumnya.
- Tekan tombol **Akses Satu Sentuhan** terprogram. Jika entri untuk tombol **Akses Satu Sentuhan** kosong, nada indikator negatif akan berbunyi.

Nada DTMF berbunyi dan layar menampilkan `Mengakhiri Panggilan Telepon`.
Jika panggilan berhasil diakhiri:

- Nada akan berbunyi.
- Layar menampilkan pesan `Panggilan Diakhiri`.

Jika panggilan tidak berhasil diakhiri, radio kembali ke layar Panggilan Telepon. Ulangi dua langkah terakhir atau tunggu hingga pengguna telepon mengakhiri panggilan.

4.9.5.2

Melakukan Panggilan Telepon dengan Tombol yang Dapat Diprogram

Ikuti prosedur untuk melakukan Panggilan Telepon dengan tombol yang dapat diprogram.

1 Tekan tombol **Telepon** terprogram untuk masuk ke daftar Entri Telepon.

2 Tekan atau ke alias atau ID yang diinginkan. Tekan OK untuk memilih.

Jika kode akses tidak dikonfigurasi sebelumnya dalam daftar Kontak, layar akan menampilkan `Kode`

Akses:. Masukkan kode akses dan tekan tombol OK untuk melanjutkan.

LED hijau akan menyala. Layar menampilkan ikon **Panggilan Telepon** , alias subscriber atau ID, dan status panggilan.

Jika penyiapan-panggilan berhasil:

- Nada DTMF akan berbunyi.
- Nada tunggu panggilan dari pengguna telepon akan terdengar.
- Layar menampilkan ikon **Panggilan Telepon**, alias subscriber atau ID, Panggilan Telepon, dan status panggilan.

Jika penyiapan-panggilan tidak berhasil:

- Nada akan berbunyi.
- Layar menampilkan Panggilan Telepon Gagal.
- Radio Anda kembali ke layar input Kode Akses. Jika kode akses telah dikonfigurasi sebelumnya di daftar Kontak, radio akan kembali ke layar tempat Anda berada sebelum memulai panggilan.

3 Tekan tombol **PTT** untuk berbicara. Lepaskan tombol **PTT** untuk mendengarkan. Ikon RSSI tidak ditampilkan selama transmisi.

4 Untuk memasukkan digit ekstra, jika diminta oleh Panggilan Telepon. Lakukan salah satu langkah berikut:

- Tekan sembarang tombol keypad untuk mulai memasukkan digit ekstra. Layar menampilkan Digit Ekstra: dan kursor berkedip. Masukkan digit ekstra dan tekan tombol OK untuk melanjutkan. Nada DTMF terdengar dan radio kembali ke layar sebelumnya.
- Tekan tombol **Akses Satu Sentuhan**. Nada DTMF akan berbunyi. Jika entri untuk tombol **Akses Satu Sentuhan** kosong, nada indikator negatif akan berbunyi.

5 Tekan untuk mengakhiri panggilan.

Jika kode de-akses tidak dikonfigurasi sebelumnya dalam daftar Kontak, layar akan menampilkan Kode-

`De Akses:`. Masukkan kode de-akses dan tekan tombol [OK] untuk melanjutkan.

Nada DTMF berbunyi dan layar menampilkan `Mengakhiri Panggilan Telepon`.

Jika pengaturan akhiri panggilan berhasil, nada terdengar dan layar menampilkan `Panggilan Diakhiri`.

Jika pengaturan akhiri panggilan tidak berhasil, radio Anda kembali ke layar Panggilan Telepon.

Saat Anda menekan tombol **PTT** ketika berada di layar Kontak Telepon, nada akan berbunyi dan layar menampilkan `Tekan OK untuk Melakukan Panggilan`.

Jika pengguna telepon mengakhiri panggilan, nada berbunyi dan layar menampilkan `Panggilan Telepon Diakhiri`.

Jika panggilan berakhir saat Anda memasukkan digit ekstra yang diminta oleh Panggilan Telepon, radio kembali ke layar yang dibuka sebelum Anda memulai panggilan.

PEMBERITAHUAN:

Selama akses saluran, tekan [⮌] untuk menghentikan percobaan panggilan dan nada akan berbunyi.

Selama panggilan, saat Anda menekan tombol **Akses Satu Sentuhan** dengan kode de-akses yang dikonfigurasi sebelumnya atau memasukkan kode de-akses sebagai input untuk digit ekstra, radio akan mencoba mengakhiri panggilan.

Selama akses saluran dan kode akses/de-akses atau transmisi digit ekstra, radio Anda hanya merespons tombol **Aktif/Nonaktif**, **Volume Aktif/Nonaktif Kenop Volume**, dan **Saluran Naik/Turun Pemilih Saluran** saja. Nada akan berbunyi untuk tiap input yang tidak valid.

4.9.5.3

Melakukan Panggilan Telepon Menggunakan Daftar Kontak

Ikuti prosedur untuk melakukan Panggilan Telepon di radio Anda menggunakan daftar Kontak.

1 Tekan OK untuk mengakses menu.

2 Tekan ▲ atau ▼ ke `Kontak`.Tekan OK untuk memilih.

Layar menampilkan entri sesuai urutan abjad.

3 Tekan ▲ atau ▼ ke alias atau ID yang diinginkan.Tekan OK untuk memilih.

Jika Anda menekan tombol **PTT** ketika berada di layar Kontak Telepon:

- Nada indikator negatif akan berbunyi.
- Layar menampilkan `Tekan OK untuk Melakukan Panggilan`.

Jika entri yang dipilih kosong:

- Nada indikator negatif akan berbunyi.
- Layar menampilkan pesan `Panggilan Telepon Tidak Valid #`.

4 Tekan ▲ atau ▼ ke `Panggilan Telepon`.

Tekan OK untuk memilih.

Layar menampilkan `Kode Akses:` jika kode akses tidak dikonfigurasikan di awal.

5 Masukkan kode akses, lalu tekan OK untuk melanjutkan.

Kode akses atau de-akses tidak boleh lebih dari 10 karakter.

Layar menampilkan ikon `Memanggil`, alias subscriber atau ID, dan **Panggilan Telepon** .
Jika panggilan berhasil:

- Nada DTMF akan berbunyi.
- Nada tunggu panggilan dari pengguna telepon akan terdengar.

- Layar menampilkan alias subscriber atau ID, ikon **Panggilan Telepon** , dan `Panggilan Telepon`.

Jika panggilan tidak berhasil:

- Nada akan berbunyi.
- Layar menampilkan `Panggilan Telepon Gagal` lalu, `Kode Akses:`.
- Radio kembali ke layar yang dibuka sebelum Anda memulai panggilan jika kode akses telah dikonfigurasikan sebelumnya di daftar Kontak.

6 Tekan tombol **PTT** untuk menjawab panggilan.

Ikon **RSSI** muncul.

7 Lepaskan tombol **PTT** untuk mendengarkan.

8 Masukkan digit ekstra dengan keypad jika diminta oleh panggilan, lalu tekan [OK] untuk melanjutkan.

Jika panggilan berakhir saat Anda memasukkan digit ekstra yang diminta oleh panggilan, radio kembali ke layar yang dibuka sebelum Anda memulai panggilan.

Nada DTMF akan berbunyi. Radio kembali ke layar sebelumnya.

9 Tekan [⊃⌂] untuk mengakhiri panggilan.

10 Jika kode de-akses belum dikonfigurasikan, masukkan kode de-akses ketika layar menampilkan `Kode De-Akses:`, lalu tekan [OK] untuk melanjutkan.

Radio kembali ke layar sebelumnya. Nada DTMF berbunyi dan layar menampilkan `Mengakhiri Panggilan Telepon`.
Jika panggilan berhasil diakhiri:

- Nada akan berbunyi.
- Layar menampilkan pesan `Panggilan Diakhiri`.

Jika panggilan tidak berhasil diakhiri, radio kembali ke layar Panggilan Telepon. Ulangi langkah 9 dan langkah 10, atau tunggu hingga pengguna telepon mengakhiri panggilan. Jika Anda menekan tombol

PTT saat berada di layar Kontak Telepon, nada akan berbunyi dan layar menampilkan `Tekan OK untuk Melakukan Panggilan`.

Jika pengguna telepon mengakhiri panggilan, nada berbunyi dan layar menampilkan `dan layar menampilkan Phone Call Ended (Panggilan Telepon Diakhiri)`.

Jika panggilan berakhir saat Anda memasukkan digit ekstra yang diminta oleh Panggilan Telepon, radio kembali ke layar yang dibuka sebelum Anda memulai panggilan.

PEMBERITAHUAN:

Selama akses saluran, tekan untuk menghentikan percobaan panggilan dan nada akan berbunyi.

Selama panggilan, saat Anda menekan tombol **Akses Satu Sentuhan** dengan kode de-akses yang dikonfigurasi sebelumnya atau memasukkan kode de-akses sebagai input untuk digit ekstra, radio akan mencoba mengakhiri panggilan.

Saat mengakses saluran dan melakukan transmisi kode akses/de-akses atau digit ekstra, radio hanya merespons tombol **On/Off**, **Kenop Volume**, dan **Pemilih Saluran**. Nada akan berbunyi untuk tiap input yang tidak valid.

4.9.5.4

Melakukan Panggilan Telepon Menggunakan Pencarian Alias

Anda juga dapat menggunakan pencarian alias atau alfanumerik untuk memperoleh alias subscriber yang diperlukan. Fitur ini hanya tersedia saat dalam Kontak. Ikuti prosedur untuk melakukan Panggilan Telepon di radio Anda menggunakan pencarian alias.

1 Tekan OK untuk mengakses menu.

2 Tekan ▲ atau ▼ ke Kontak.Tekan OK untuk memilih.

Layar menampilkan entri sesuai urutan abjad.

3 Tekan ▲ atau ▼ ke alias atau ID subscriber yang diinginkan.

4 Tekan OK untuk memilih. Jika entri yang dipilih kosong, nada indikator negatif akan berbunyi dan layar menampilkan Phone Call Invalid # (Panggilan Telepon Tidak Valid #).

5 Tekan ▲ atau ▼ ke Panggilan Telepon.

Tekan OK untuk memilih.

Jika kode akses tidak dikonfigurasi sebelumnya dalam daftar Kontak, layar akan menampilkan Kode Akses: dan kursor yang berkedip. Masukkan kode akses dan tekan tombol OK untuk melanjutkan.

Jika berhasil:

- Nada DTMF akan berbunyi.
- Nada tunggu panggilan dari pengguna telepon akan terdengar.
- Layar menampilkan alias subscriber atau ID, ikon **RSSI** , Panggilan Telepon, dan **Panggilan Telepon** .

Jika tidak berhasil:

- Nada akan berbunyi.
- Layar menampilkan pesan Panggilan Telepon Gagal.
- Radio Anda kembali ke layar input Kode Akses. Jika kode akses telah dikonfigurasi sebelumnya di daftar Kontak, radio akan kembali ke layar tempat Anda berada sebelum memulai panggilan.

6 Tekan tombol **PTT** untuk berbicara dan lepaskan untuk mendengarkan. Ikon **RSSI** tidak ditampilkan selama transmisi.

7 Untuk memasukkan digit ekstra, jika diminta oleh Panggilan Telepon, lakukan salah satu hal berikut.

- Tekan sembarang tombol keypad untuk mulai memasukkan digit ekstra. Layar menampilkan `Digit Ekstra:` dan kursor berkedip. Masukkan digit ekstra dan tekan tombol OK untuk melanjutkan. Nada DTMF akan berbunyi
- Tekan tombol **Akses Satu Sentuhan**. Nada DTMF akan berbunyi. Jika entri untuk tombol **Akses Satu Sentuhan** kosong, nada indikator negatif akan berbunyi dan radio kembali ke layar sebelumnya.

8 Tekan untuk mengakhiri panggilan.

Jika kode de-akses tidak dikonfigurasi sebelumnya dalam daftar Kontak, layar akan menampilkan `Kode-De Akses:` dan kursor yang berkedip. Masukkan kode de-akses dan tekan OK untuk melanjutkan.

Radio kembali ke layar sebelumnya. Nada DTMF berbunyi dan layar menampilkan `Ending Phone Call` (Mengakhiri Panggilan Telepon).

Jika berhasil:

- Nada akan berbunyi.
- Layar menampilkan pesan `Panggilan Telepon Diakhiri.`
- Radio Anda kembali ke layar Panggilan Telepon.

Jika tidak berhasil:

- Radio Anda kembali ke layar Panggilan Telepon.
- Jika Anda menekan tombol **PTT** saat berada di layar Kontak Telepon, nada akan berbunyi dan layar menampilkan `Tekan OK untuk Melakukan Panggilan.`
- Jika pengguna telepon mengakhiri panggilan, nada berbunyi dan layar menampilkan `dan layar menampilkan Phone Call Ended (Panggilan Telepon Diakhiri).`
- Jika panggilan berakhir saat Anda memasukkan digit ekstra yang diminta oleh Panggilan Telepon,

radio kembali ke layar yang dibuka sebelum Anda memulai panggilan.

PEMBERITAHUAN:

Selama akses saluran, tekan untuk menghentikan percobaan panggilan dan nada akan berbunyi atau untuk keluar dari pencarian alias.

Tekan tombol OK atau untuk keluar dari pencarian alias. Selama panggilan, saat Anda menekan tombol **Akses Satu Sentuhan** dengan kode de-akses yang dikonfigurasi sebelumnya atau memasukkan kode de-akses sebagai input untuk digit ekstra, radio akan mencoba mengakhiri panggilan. Saat mengakses saluran dan melakukan transmisi kode akses/de-akses atau digit ekstra, radio hanya merespons tombol On/Off, Kenop Volume, dan Pemilih Saluran. Nada akan berbunyi untuk tiap input yang tidak valid.

4.9.5.5

Melakukan Panggilan Telepon Menggunakan Panggilan Manual

Ikuti prosedur untuk melakukan Panggilan Telepon di radio Anda menggunakan panggilan manual.

1. Tekan OK untuk mengakses menu.
2. Tekan atau ke `Kontak`.Tekan OK untuk memilih.
3. Tekan atau ke `Panggilan Manual`.

   Tekan OK untuk memilih.
4. Tekan atau ke `Nomor Telepon`. Tekan OK untuk memilih.

   Layar menampilkan `Nomor:` dan kursor berkedip.

5 Masukkan nomor telepon, lalu tekan [OK] untuk melanjutkan.

Layar menampilkan `Kode Akses:` dan kursor berkedip jika kode akses belum dikonfigurasikan.

6 Masukkan kode akses, lalu tekan [OK] untuk melanjutkan. Kode akses atau de-akses tidak boleh lebih dari 10 karakter.

LED hijau akan menyala. Layar menampilkan ikon **Panggilan Telepon,** alias subscriber, dan status panggilan.

Jika panggilan berhasil:

- Nada DTMF akan berbunyi.
- Nada tunggu panggilan dari pengguna telepon akan terdengar.
- Layar menampilkan alias subscriber dan ikon **Panggilan Telepon** .

Jika panggilan tidak berhasil:

- Nada akan berbunyi.
- Layar menampilkan `Panggilan Telepon Gagal` lalu, `Kode Akses:`.
- Radio kembali ke layar yang dibuka sebelum memulai panggilan jika kode akses telah dikonfigurasikan sebelumnya di daftar Kontak.

7 Tekan [⮌⌂] untuk mengakhiri panggilan.

8 Lakukan salah satu langkah berikut:

- Jika kode de-akses belum dikonfigurasikan, masukkan kode de-akses ketika layar menampilkan `Kode De-Akses:`, lalu tekan [OK] untuk melanjutkan. Radio kembali ke layar sebelumnya.
- Tekan tombol **Akses Satu Sentuhan** terprogram. Jika entri untuk tombol **Akses Satu Sentuhan** kosong, nada indikator negatif akan berbunyi.

Nada DTMF berbunyi dan layar menampilkan `Mengakhiri Panggilan Telepon.`

Jika panggilan berhasil diakhiri:

- Nada akan berbunyi.
- Layar menampilkan pesan `Panggilan Diakhiri.`

Jika panggilan tidak berhasil diakhiri, radio kembali ke layar Panggilan Telepon. Ulangi langkah 7, atau tunggu hingga pengguna telepon mengakhiri panggilan.

PEMBERITAHUAN:
Saat Anda menekan tombol **PTT** ketika berada di layar Kontak Telepon, nada akan berbunyi dan layar menampilkan `menampilkan Tekan OK untuk Melakukan Panggilan.`

Saat pengguna telepon mengakhiri panggilan, nada akan berbunyi dan layar akan menampilkan `Panggilan Diakhiri.`

Jika panggilan berakhir saat Anda memasukkan digit ekstra yang diminta oleh Panggilan Telepon, radio kembali ke layar yang dibuka sebelum Anda memulai panggilan.

Selama akses saluran, tekan untuk menghentikan percobaan panggilan dan nada akan berbunyi.

Selama panggilan, saat Anda menekan tombol **Akses Satu Sentuhan** dengan kode de-akses yang dikonfigurasi sebelumnya atau memasukkan kode de-akses sebagai input untuk digit ekstra, radio akan mencoba mengakhiri panggilan.

Saat mengakses saluran dan melakukan transmisi kode akses/de-akses atau digit ekstra, radio hanya merespons tombol **On/Off**, **Kenop Volume**, dan **Pemilih Saluran**. Nada akan berbunyi untuk tiap input yang tidak valid.

4.9.5.6

Multi-Frekuensi Nada Ganda

Fitur Multi Frekuensi Dual Tone (DTMF) memungkinkan radio beroperasi dalam sistem radio dengan antarmuka ke sistem telepon.

Menonaktifkan semua nada radio dan peringatan akan menonaktifkan nada DTMF secara otomatis.

4.9.5.6.1

Mengaktifkan Nada DTMF

Ikuti prosedur untuk mengaktifkan nada DTMF di radio Anda.

1 Tekan dan tahan tombol **PTT**.

2 Lakukan salah satu langkah berikut:

- Masukkan nomor yang diinginkan untuk mengaktifkan nada DTMF.
- Tekan untuk mengaktifkan nada DTMF.
- Tekan untuk mengaktifkan nada DTMF.

4.9.5.7

Merespons Panggilan Telepon sebagai Semua Panggilan

Saat Anda menerima Panggilan Telepon sebagai Semua Panggilan, radio penerima tidak dapat melakukan talkback atau merespons. Pengguna penerima juga tidak diizinkan mengakhiri Semua Panggilan.

Saat menerima Panggilan Telepon sebagai Semua Panggilan:

- Layar menampilkan ikon **Panggilan Telepon** di sudut kanan atas.
- Layar menampilkan `Semua Panggilan`, `Semua Panggilan Site`, atau `Panggilan Multisite` tergantung pada jenis konfigurasi dan `Panggilan Telepon`.
- LED akan berkedip hijau.

- Radio bersuara dan panggilan masuk berbunyi melalui speaker.

4.9.5.8

Merespons Panggilan Telepon sebagai Panggilan Grup

Ikuti prosedur untuk merespons Panggilan Telepon sebagai Panggilan Grup di radio Anda.

Saat menerima Panggilan Telepon sebagai Panggilan Grup:

- Layar menampilkan ikon **Panggilan Telepon** dan `Panggilan Telepon`.
- LED akan berkedip hijau.
- Radio bersuara dan panggilan masuk berbunyi melalui speaker.

1. Tekan tombol **PTT** untuk menjawab panggilan.
2. Lepaskan tombol **PTT** untuk mendengarkan.
3. Tekan untuk mengakhiri panggilan.

PEMBERITAHUAN:
Radio Anda tidak dapat menghentikan panggilan telepon sebagai panggilan grup. Pengguna telepon yang harus mengakhiri panggilan. Pengguna penerima hanya diizinkan melakukan talkback selama panggilan.

Layar menampilkan `Mengakhiri Panggilan Telepon`.
Jika panggilan berhasil diakhiri:

- Nada akan berbunyi.
- Layar menampilkan pesan `Panggilan Diakhiri`.

Jika panggilan tidak berhasil diakhiri, radio kembali ke layar Panggilan Telepon. Ulangi langkah 3 atau tunggu hingga pengguna telepon mengakhiri panggilan.

4.9.5.9

Merespons Panggilan Telepon sebagai Panggilan Pribadi

Ikuti prosedur untuk merespons Panggilan Telepon sebagai Panggilan Pribadi di radio Anda.

Saat menerima Panggilan Telepon sebagai Panggilan Pribadi:

- Layar menampilkan ikon **Panggilan Telepon** dan `Panggilan Telepon`.
- LED akan berkedip hijau.
- Radio bersuara dan panggilan masuk berbunyi melalui speaker.

1. Tekan tombol **PTT** untuk menjawab panggilan.
2. Lepaskan tombol **PTT** untuk mendengarkan.
3. Tekan untuk mengakhiri panggilan.

PEMBERITAHUAN:
Radio Anda tidak dapat menghentikan panggilan telepon sebagai panggilan grup. Pengguna telepon yang harus mengakhiri panggilan. Pengguna penerima hanya diizinkan melakukan talkback selama panggilan.

Layar menampilkan `Mengakhiri Panggilan Telepon`.
Jika panggilan berhasil diakhiri:

- Nada akan berbunyi.
- Layar menampilkan pesan `Panggilan Diakhiri`.

Jika panggilan tidak berhasil diakhiri, radio kembali ke layar Panggilan Telepon. Ulangi langkah 3 atau tunggu hingga pengguna telepon mengakhiri panggilan.

4.9.6

Memulai Interupsi Transmisi

Panggilan yang sedang berlangsung terputus, saat Anda melakukan tindakan berikut:

- Tekan tombol **Voice PTT**.
- Tekan tombol **Darurat**.

Radio penerima menampilkan `Panggilan Diinterupsi.`

4.9.7

Penimpaan Panggilan

Penimpaan Panggilan memungkinkan radio menghentikan transmisi suara apa pun yang sedang berlangsung dan memulai transmisi prioritas.

Dengan fitur Penimpaan Panggilan, sistem menginterupsi dan menimpa panggilan yang sedang berlangsung pada kejadian dengan saluran trunking tersedia.

Panggilan dengan prioritas yang lebih tinggi, seperti Panggilan Darurat atau Semua Panggilan, menimpa radio yang melakukan transmisi untuk mengakomodasi panggilan dengan prioritas lebih tinggi. Jika tidak ada saluran Frekuensi Radio (RF) lain yang tersedia, Panggilan Darurat juga menimpa Semua Panggilan.

4.9.8

Interupsi Suara

Interupsi Suara memungkinkan pengguna mematikan transmisi suara yang sedang berlangsung.

Fitur ini menggunakan pensinyalan saluran balik untuk menghentikan transmisi suara yang sedang berlangsung dari sebuah radio, jika radio yang menginterupsi dikonfigurasi untuk Interupsi Suara, dan radio pemancar dikonfigurasi agar Dapat Diinterupsi Panggilan Suara. Kemudian radio yang menginterupsi diperbolehkan melakukan transmisi suara kepada peserta di panggilan yang dihentikan.

Fitur Interupsi Suara meningkatkan kemampuan pengiriman transmisi baru yang berhasil secara signifikan ke pihak yang dimaksud ketika panggilan berlangsung.

Interupsi Suara dapat diakses pengguna hanya jika fitur ini telah disiapkan di radio. Tanyakan kepada dealer atau administrator sistem Anda untuk informasi selengkapnya.

4.9.8.1

Mengaktifkan Interupsi Suara

Ikuti prosedur untuk memulai Interupsi Suara di radio Anda.

Radio harus diprogram agar Anda bisa menggunakan fitur ini. Tanyakan kepada penyalur atau administrator sistem Anda untuk informasi lebih lanjut.

1 Untuk menginterupsi transmisi selama panggilan berlangsung, tekan tombol **PTT**.

Pada radio yang diinterupsi, layar menampilkan `Panggilan Diinterupsi`. Radio membunyikan nada indikator negatif sampai tombol **PTT** dilepas.

2 Tunggu respons.

Jika berhasil:

- Nada indikator positif akan berbunyi.

Jika tidak berhasil:

- Nada indikator negatif akan berbunyi.

3 Lakukan salah satu langkah berikut:

- Tunggu hingga Nada Izin Bicara selesai dan bicaralah dengan jelas ke mikrofon, jika diaktifkan.
- Tunggu hingga Sidetone **PTT** selesai dan bicaralah dengan jelas ke mikrofon, jika diaktifkan.

4.10

Fitur Lanjutan

Bab ini menjelaskan pengoperasian fitur-fitur yang terdapat di radio Anda.

Dealer atau administrator sistem mungkin telah mengatur radio sesuai dengan kebutuhan khusus Anda. Tanyakan kepada dealer atau administrator sistem Anda untuk informasi selengkapnya.

4.10.1

Antrean Panggilan

Bila tidak ada sumber daya yang tersedia untuk memproses panggilan, Antrean Panggilan memungkinkan permintaan panggilan ditempatkan di antrean sistem untuk sumber daya berikutnya yang tersedia.

Anda mendengar Nada Antrean Panggilan setelah menekan tombol **PTT** dan layar radio menampilkan `Panggilan Dalam Antrean` menunjukkan bahwa radio telah masuk ke dalam Status Antrean Panggilan. Tombol

PTT dapat dilepas setelah Nada Antrean Panggilan terdengar.

Jika penyiapan panggilan berhasil, hal berikut akan terjadi:

- LED akan berkedip hijau.
- Jika diaktifkan, Nada Izin Bicara berbunyi.
- Layar menampilkan ikon jenis panggilan, ID, atau alias.
- Pengguna radio memiliki waktu hingga 4 detik untuk menekan tombol **PTT** untuk memulai transmisi suara.

Jika penyiapan panggilan tidak berhasil, hal berikut akan terjadi:

- Jika diaktifkan, Nada Penolakan berbunyi.
- Layar menampilkan pemberitahuan kegagalan selama beberapa saat.
- Panggilan diputus dan radio keluar dari penyiapan panggilan.

4.10.2

Panggilan Prioritas

Panggilan Prioritas memungkinkan sistem untuk menimpa salah satu dari panggilan non-prioritas yang sedang berlangsung dan memulai panggilan prioritas tinggi yang diminta saat semua saluran sedang sibuk.

Ketika semua saluran sedang penuh dengan panggilan prioritas tinggi, sistem tidak akan menimpa panggilan tersebut, dan menempatkan panggilan prioritas tinggi yang diminta ke antrean panggilan. Jika sistem gagal menempatkan panggilan prioritas tinggi yang diminta ke antrean, maka akan dinyatakan sebagai kegagalan.

Pengaturan default untuk Panggilan Prioritas telah dikonfigurasikan sebelumnya. Tekan tombol yang dapat diprogram untuk beralih antara level prioritas normal dan tinggi. Saat Anda menggunakan fitur berikut, level panggilan prioritas kembali otomatis ke pengaturan yang dikonfigurasi sebelumnya.

- Semua panggilan suara
- Pesan Teks DMR Ⅲ/Pesan Teks
- Tiket Tugas
- Monitor Jarak Jauh

Berikut ini adalah tipe Panggilan Prioritas:

Prioritas Tinggi

Radio menampilkan `Panggilan Berikutnya: Prioritas Tinggi.`

Ikon **Panggilan Prioritas Tinggi** muncul di bagian atas layar radio.

Bunyi Pengumuman Suara Panggilan Berikutnya: Prioritas Tinggi.

Prioritas Normal

Radio menampilkan `Panggilan Berikutnya: Prioritas Normal.`

Ikon **Panggilan Prioritas Tinggi** menghilang.

Bunyi Pengumuman Suara Panggilan Berikutnya: Prioritas Normal.

4.10.3

Pemindaian Grup Bicara

Fitur ini memungkinkan radio memantau dan menggabungkan panggilan untuk grup yang ditentukan oleh Daftar Grup Terima.

Saat pemindaian diaktifkan, radio mengaktifkan suara setiap anggota dalam Daftar Grup Terima.

Jika pemindaian dinonaktifkan, radio tidak menerima transmisi dari anggota Daftar Grup Terima, kecuali untuk Semua Panggilan dan Grup Bicara yang dipilih.

4.10.3.1

Mengaktifkan atau Menonaktifkan Pemindaian Grup Bicara

Ikuti prosedur untuk mengaktifkan atau menonaktifkan Pemindaian Grup Bicara di radio Anda.

1. Tekan OK untuk mengakses menu.
2. Tekan ▲ atau ▼ ke `Pindai`. Tekan OK untuk memilih.
3. Lakukan salah satu langkah berikut:
   - Tekan ▲ atau ▼ ke `Aktifkan`. Tekan OK untuk memilih.
   - Tekan ▲ atau ▼ ke `Nonaktifkan`. Tekan OK untuk memilih.

Jika pemindaian diaktifkan:

- Layar menampilkan ikon `Pemindaian Aktif` dan **Pindai**.
- LED kuning akan berkedip.

- Nada indikator positif akan berbunyi.

Jika pemindaian dinonaktifkan:

- Layar akan menampilkan `Pemindaian Nonaktif`.
- Ikon **Pindai** tidak muncul.
- LED mati.
- Nada indikator negatif akan berbunyi.

4.10.4

Daftar Grup Terima

Daftar Grup Terima adalah fitur yang memungkinkan Anda membuat dan mengalokasikan anggota pada daftar pindai grup bicara.

Daftar ini dibuat saat radio diprogram dan daftar menentukan grup yang dapat dipindai. Radio Anda bisa mendukung maksimal 16 anggota di daftar tersebut.

Jika radio diprogram untuk mengizinkan pengeditan daftar pindai, Anda bisa:

- Menambah/menghapus grup bicara.
- Menambah, menghapus, dan/atau mengedit prioritas grup bicara. Baca Mengedit Prioritas untuk Grup Bicara di halaman 114 .
- Menambah, menghapus, dan/atau mengedit grup bicara afiliasi. Lihat Menambahkan Afiliasi Grup Bicara di halaman 115 dan Menghapus Afiliasi Grup Bicara di halaman 116 .
- Mengganti daftar pindai yang ada dengan daftar pindai baru.

Jika grup bicara diprogram sebagai Grup Bicara Permanen, Anda tidak dapat mengedit grup bicara dari daftar pindai.

PENTING:
Untuk menambah anggota ke daftar, konfigurasikan grup bicara di radio terlebih dahulu.

PEMBERITAHUAN:
Daftar Grup Terima diprogram oleh administrator sistem. Tanyakan kepada dealer atau administrator sistem Anda untuk informasi selengkapnya.

4.10.5

Monitor Prioritas

Fitur Monitor Prioritas membuat radio dapat menerima transmisi dari grup bicara secara otomatis dengan prioritas lebih tinggi jika radio sedang dalam grup bicara lain.

Radio mengakhiri panggilan grup bicara dengan prioritas yang lebih rendah agar dapat menerima panggilan grup bicara dengan prioritas lebih tinggi.

PEMBERITAHUAN:
Fitur ini hanya dapat diakses saat fitur Pindai Grup Bicara aktif.

Fitur Prioritas Minor hanya berlaku bagi anggota dalam Daftar Grup Terima. Terdapat dua Grup Bicara Prioritas: Prioritas 1 (P1) dan Prioritas 2 (P2). P1 mempunyai prioritas lebih tinggi daripada P2. Di sistem Capacity Max, radio menerima transmisi sesuai dengan urutan prioritas berikut:

1. Panggilan Darurat untuk Grup Bicara P1
2. Panggilan Darurat untuk Grup Bicara P2
3. Panggilan Darurat untuk Grup Bicara non-prioritas dalam Daftar Grup Terima
4. Semua Panggilan
5. Panggilan Grup Bicara P1
6. Panggilan Grup Bicara P2
7. Grup Bicara Non-prioritas dalam Daftar Grup Terima

Lihat Mengedit Prioritas untuk Grup Bicara di halaman 114 untuk informasi lebih lanjut mengenai cara menambahkan, menghapus, dan/atau mengedit prioritas grup bicara dalam daftar pindai.

PEMBERITAHUAN:
Fitur ini diprogram oleh administrator sistem. Tanyakan kepada dealer atau administrator sistem Anda untuk informasi selengkapnya.

4.10.5.1
Mengedit Prioritas untuk Grup Bicara

Di Menu Pemindaian Grup Bicara, Anda dapat melihat atau mengedit prioritas grup bicara.

1. Tekan OK untuk mengakses menu.
2. Tekan ▲ atau ▼ ke `Pindai`. Tekan OK untuk memilih.
3. Tekan ▲ atau ▼ ke `Lihat/Edit Daftar`. Tekan OK untuk memilih.

4 Tekan ▲ atau ▼ ke grup bicara yang diinginkan. Tekan OK untuk memilih.

Prioritas saat ini ditunjukkan dengan ikon **Prioritas 1** atau **Prioritas 2** di sebelah grup bicara.

5 Tekan ▲ atau ▼ ke `Edit Prioritas`. Tekan OK untuk memilih.

6 Tekan ▲ atau ▼ ke tingkat prioritas yang diperlukan. Tekan OK untuk memilih.

Jika grup bicara lain telah ditetapkan ke Prioritas 1 atau Prioritas 2, Anda dapat menimpa prioritas saat ini. Ketika layar menampilkan `Timpa yang Sudah Ada?`, tekan ▲ atau ▼ pada opsi berikut:

- `Tidak` untuk kembali ke langkah sebelumnya.
- `Ya` untuk menimpa.

Layar menampilkan pemberitahuan mini positif sebelum kembali ke layar sebelumnya. Ikon prioritas muncul di sebelah grup bicara.

4.10.6

Afiliasi Multi-Grup Bicara

Radio dapat dikonfigurasikan untuk hingga tujuh grup bicara.

Dari 16 grup bicara di Daftar Grup Terima, Anda dapat menetapkan hingga tujuh grup bicara sebagai grup bicara afiliasi. Grup bicara yang dipilih dan grup bicara prioritas otomatis terafiliasi.

4.10.6.1

Menambahkan Afiliasi Grup Bicara

Ikuti prosedur untuk menambahkan afiliasi grup bicara.

1 Tekan OK untuk mengakses menu.

2 Tekan ▲ atau ▼ ke `Pindai`. Tekan OK untuk memilih.

3 Tekan ▲ atau ▼ ke `Lihat/Edit Daftar`. Tekan OK untuk memilih.

4 Tekan ▲ atau ▼ ke ID atau alias grup bicara yang diinginkan. Tekan OK untuk memilih.

Status afiliasi ditampilkan di `Daftar Tampilkan/Edit`. Layar akan menampilkan ● di sebelah ID atau alias grup bicara yang dipilih.

5 Tekan ▲ atau ▼ ke `Edit Afiliasi`. Tekan OK untuk memilih.

6 Lakukan salah satu langkah berikut:

- Tekan ▲ atau ▼ ke `Aktif`. Tekan OK untuk memilih.
- Tekan ▲ atau ▼ ke `Nonaktif`. Tekan OK untuk memilih.

Jika `Hidup` dipilih, ● akan muncul di sebelah ID atau alias grup bicara.

Jika afiliasi berhasil, layar menampilkan ✓ di sebelah ID atau alias grup bicara yang dipilih.

Jika afiliasi gagal, ● tetap berada di sebelah ID atau alias grup bicara.

PEMBERITAHUAN:
Radio menampilkan `Daftar Penuh` saat Anda memilih maksimal tujuh grup bicara untuk afiliasi di daftar pemindaian. Untuk memilih grup bicara afiliasi baru, hapus grup bicara afiliasi yang ada untuk memungkinkan penambahan baru. Lihat Menghapus Afiliasi Grup Bicara di halaman 116 untuk informasi selengkapnya.

4.10.6.2

Menghapus Afiliasi Grup Bicara

Saat daftar afiliasi penuh dan Anda ingin memilih grup bicara afiliasi baru, hapus grup bicara afiliasi yang ada untuk memungkinkan penambahan baru. Ikuti prosedur untuk menghapus afiliasi grup bicara.

1 Tekan OK untuk mengakses menu.

2 Tekan ▲ atau ▼ ke `Pindai`. Tekan OK untuk memilih.

3 Tekan ▲ atau ▼ ke `Lihat/Edit Daftar`. Tekan OK untuk memilih.

4 Tekan ▲ atau ▼ ke ID atau alias grup bicara yang diinginkan. Tekan OK untuk memilih.

Status afiliasi ditampilkan di `Daftar Tampilkan/Edit`. Layar akan menampilkan ● di sebelah ID atau alias grup bicara yang dipilih.

5 Tekan ▲ atau ▼ ke `Edit Afiliasi`. Tekan OK untuk memilih.

6 Tekan ▲ atau ▼ ke `Nonaktif`. Tekan OK untuk memilih.

Jika `Mati` dipilih, ● tidak ditampilkan di samping ID atau alias grup bicara.

4.10.7

Talkback

Fitur Talkback memungkinkan Anda merespons transmisi saat sedang memindai.

Jika radio Anda memindai panggilan dari daftar pindai grup yang dapat dipilih, dan jika tombol **PTT** ditekan selama panggilan terpindai, pengoperasian radio tergantung pada apakah Talkback diaktifkan atau dinonaktifkan selama pemrograman radio. Tanyakan kepada dealer atau administrator sistem Anda untuk informasi selengkapnya.

Talkback Nonaktif

Radio keluar dari panggilan terpindai dan mencoba mentransmisikan kontak untuk posisi saluran yang sedang dipilih. Setelah Waktu Hang Panggilan pada kontak yang sedang dipilih berakhir, radio kembali ke saluran awal dan memulai Pencatat Waktu Hang Pemindaian. Radio kembali ke pemindaian grup setelah Pencatat Waktu Hang Pemindaian berakhir.

Talkback Aktif

Jika tombol **PTT** ditekan selama Waktu Hang Grup panggilan terpindai, radio akan mencoba melakukan transmisi grup terpindai.

PEMBERITAHUAN:
Jika memindai panggilan untuk grup yang tidak diberi posisi saluran dalam zona yang sedang dipilih dan panggilan berakhir, beralihlah ke zona yang sesuai lalu pilih posisi saluran grup untuk menjawab grup tersebut.

4.10.8

Bluetooth®

Fitur ini memungkinkan Anda untuk menggunakan radio dengan perangkat (aksesori) Bluetooth melalui sambungan Bluetooth. Radio mendukung perangkat Bluetooth dari Motorola Solutions dan COTS (Commercially available Off-The-Shelf).

Bluetooth beroperasi dalam jarak pandang sejauh 10 m (32 kaki). Ini adalah jalur tanpa hambatan antara radio Anda dan perangkat berkemampuan Bluetooth. Untuk keandalan tingkat tinggi, Motorola Solutions menyarankan untuk tidak memisahkan radio dan aksesori.

Di area batas penerimaan, kualitas suara dan nada mulai terdengar "samar" atau "terputus-putus". Untuk mengatasi masalah ini, dekatkan posisi radio dan perangkat berkemampuan Bluetooth (dalam jarak 10 m yang telah ditetapkan) untuk menghasilkan kembali penerimaan audio yang jernih. Fungsi Bluetooth di radio mempunyai daya maksimum 2,5 mW (4 dBm) dengan jangkauan 10 m.

Radio dapat mendukung hingga tiga sambungan Bluetooth secara bersamaan dengan perangkat Bluetooth dari jenis yang berbeda. Misalnya, headset, pemindai, perangkat sensor, dan PTT-Only Device (POD).

Lihat panduan pengguna untuk perangkat berkemampuan Bluetooth Anda untuk informasi selengkapnya tentang kapabilitas penuh dari perangkat berkemampuan Bluetooth Anda.

PEMBERITAHUAN:
Jika dinonaktifkan melalui CPS, semua fitur terkait Bluetooth akan dinonaktifkan dan database perangkat Bluetooth dihapus.

4.10.8.1

Mengaktifkan dan Menonaktifkan Bluetooth

Ikuti prosedur untuk mengaktifkan dan menonaktifkan Bluetooth.

1 Tekan OK untuk mengakses menu.

2 Tekan ▲ atau ▼ ke Bluetooth. Tekan OK untuk memilih.

3 Tekan ▲ atau ▼ ke Status Saya. Tekan OK untuk memilih.

Layar akan menampilkan Aktif dan Nonaktif. Status saat ini ditunjukkan oleh ✓.

4 Lakukan salah satu langkah berikut:

- Tekan ▲ atau ▼ ke Aktif. Tekan OK untuk memilih. Layar menampilkan ✓ di sebelah Aktif.
- Tekan ▲ atau ▼ ke Nonaktif. Tekan OK untuk memilih. Layar menampilkan ✓ di sebelah Nonaktif.

4.10.8.2

Menghubungkan ke Perangkat Bluetooth

Ikuti prosedur untuk menghubungkan dengan perangkat Bluetooth.

Hidupkan perangkat berkemampuan Bluetooth dan alihkan ke mode pasangan.

1 Tekan OK untuk mengakses menu.

2 Tekan ▲ atau ▼ ke Bluetooth. Tekan OK untuk memilih.

3 Tekan ▲ atau ▼ ke Perangkat. Tekan OK untuk memilih.

4 Lakukan salah satu langkah berikut:

- Tekan ▲ atau ▼ ke perangkat yang diinginkan. Tekan OK untuk memilih.
- Tekan ▲ atau ▼ ke `Cari Perangkat` untuk mencari perangkat yang tersedia. Tekan ▲ atau ▼ ke perangkat yang diinginkan. Tekan OK untuk memilih.

5 Tekan ▲ atau ▼ ke `Hubungkan`. Tekan OK untuk memilih.

Perangkat berkemampuan Bluetooth mungkin memerlukan langkah-langkah tambahan untuk menyelesaikan pemasangan. Baca panduan pengguna tentang perangkat berkemampuan Bluetooth.

Layar menampilkan `Menyambung ke <Perangkat>`.

Tunggu respons.
Jika berhasil:

- Nada indikator positif akan berbunyi.
- Layar menampilkan `<Perangkat> Terhubung` dan ikon **Bluetooth Terhubung**.
- Layar menampilkan ✓ di sebelah perangkat yang terhubung.

Jika tidak berhasil:

- Nada indikator negatif akan berbunyi.
- Layar menampilkan `Gagal Menghubungkan`.

PEMBERITAHUAN:
Jika memerlukan kode PIN, lihat Mengakses Radio Menggunakan Kata Sandi di halaman 202 .

4.10.8.3

Menghubungkan ke Perangkat Bluetooth dalam Mode Dapat Ditemukan

Ikuti prosedur untuk menyambung ke perangkat Bluetooth dalam mode dapat ditemukan.

Hidupkan perangkat berkemampuan Bluetooth dan alihkan ke mode pasangan.

1 Tekan OK untuk mengakses menu.

2 Tekan ▲ atau ▼ ke `Bluetooth`. Tekan OK untuk memilih.

3 Tekan ▲ atau ▼ ke `Temukan Saya`. Tekan OK untuk memilih. Sekarang radio dapat ditemukan oleh perangkat lain yang berkemampuan Bluetooth selama durasi yang diprogram. Ini disebut Mode Dapat Ditemukan.

Tunggu respons.
Jika berhasil:

- Nada indikator positif akan berbunyi.
- Layar menampilkan `<Perangkat> Terhubung` dan ikon **Bluetooth Terhubung**.
- Layar menampilkan ✓ di sebelah perangkat yang terhubung.

Jika tidak berhasil:

- Nada indikator negatif akan berbunyi.
- Layar menampilkan `Gagal Menghubungkan`.

4.10.8.4

Memutuskan Sambungan dari Perangkat Bluetooth

Ikuti prosedur untuk memutus koneksi dengan perangkat Bluetooth.

1 Tekan OK untuk mengakses menu.

2 Tekan ▲ atau ▼ ke `Bluetooth`. Tekan OK untuk memilih.

3 Tekan ▲ atau ▼ ke `Perangkat`. Tekan OK untuk memilih.

4 Tekan ▲ atau ▼ ke perangkat yang diinginkan. Tekan OK untuk memilih.

5 Tekan ▲ atau ▼ ke `Putuskan Sambungan`.

Tekan OK untuk memilih.

Layar menampilkan `Memutuskan dari <Perangkat>`.

PEMBERITAHUAN:
Perangkat berkemampuan Bluetooth Anda mungkin memerlukan langkah tambahan untuk memutuskan sambungan. Baca panduan pengguna masing-masing untuk perangkat berkemampuan Bluetooth.

Tunggu respons.

- Nada akan berbunyi.
- Layar menampilkan `<Perangkat> Terputus` dan ikon **Bluetooth Terhubung** hilang.
- Ikon ✓ hilang dari sebelah perangkat yang terhubung.

4.10.8.5

Mengalihkan Rute Audio antara Speaker Radio Internal dan Perangkat Bluetooth

Ikuti prosedur untuk mengalihkan rute audio antara speaker internal radio dan perangkat Bluetooth eksternal.

Tekan tombol terprogram **Sakelar Audio Bluetooth**.

Layar menampilkan salah satu hasil berikut ini:

- Nada akan berbunyi. Layar menampilkan `Rutekan Audio ke Radio`.
- Nada akan berbunyi. Layar menampilkan `Rutekan Audio ke Bluetooth`.

4.10.8.6

Melihat Detail Perangkat

Ikuti prosedur untuk melihat detail perangkat di radio.

1 Tekan OK untuk mengakses menu.

2 Tekan ▲ atau ▼ ke Bluetooth. Tekan OK untuk memilih.

3 Tekan ▲ atau ▼ ke Perangkat. Tekan OK untuk memilih.

4 Tekan ▲ atau ▼ ke perangkat yang diinginkan. Tekan OK untuk memilih.

5 Tekan ▲ atau ▼ ke Lihat Detail. Tekan OK untuk memilih.

4.10.8.7

Menghapus Nama Perangkat

Anda dapat menghapus perangkat yang diputus sambungannya dari daftar perangkat berkemampuan Bluetooth.

1 Tekan OK untuk mengakses menu.

2 Tekan ▲ atau ▼ ke Bluetooth. Tekan OK untuk memilih.

3 Tekan ▲ atau ▼ ke Perangkat. Tekan OK untuk memilih.

4 Tekan ▲ atau ▼ ke perangkat yang diinginkan. Tekan OK untuk memilih.

5 Tekan ▲ atau ▼ ke Hapus. Tekan OK untuk memilih. Layar menampilkan Perangkat Dihapus.

4.10.8.8

Penguatan Mikrofon Bluetooth

Dengan fitur ini, pengguna dapat mengontrol nilai penguatan mikrofon pada perangkat berkemampuan Bluetooth yang terhubung.

1 Tekan OK untuk mengakses menu.

2 Tekan ▲ atau ▼ ke `Bluetooth`. Tekan OK untuk memilih.

3 Tekan ▲ atau ▼ ke `Penguatan Mik BT`. Tekan OK untuk memilih.

4 Tekan ▲ atau ▼ ke jenis Penguatan Mik BT dan nilai saat ini. Tekan OK untuk memilih. Anda dapat mengedit nilai di sini.

5 Tekan ▲ atau ▼ untuk menambah atau mengurangi nilai. Tekan OK untuk memilih.

4.10.9

Lokasi Dalam Ruangan

PEMBERITAHUAN:
Fitur Lokasi Dalam Ruangan hanya berlaku untuk model dengan perangkat lunak dan perangkat keras terbaru. Tanyakan kepada dealer atau administrator sistem Anda untuk informasi selengkapnya.

Lokasi Dalam Ruangan digunakan untuk terus melacak lokasi pengguna radio. Apabila Lokasi Dalam Ruangan diaktifkan, radio berada dalam mode dapat ditemukan terbatas. Suar terdedikasi digunakan untuk menemukan lokasi radio dan menentukan posisinya.

4.10.9.1

Mengaktifkan atau Menonaktifkan Lokasi Dalam Ruangan

Anda dapat mengaktifkan atau menonaktifkan Lokasi Dalam Ruangan dengan melakukan satu tindakan berikut ini.

- Akses fitur ini melalui menu.
  a. Tekan OK untuk mengakses menu.
  b. Tekan ▲ atau ▼ ke `Bluetooth` dan tekan OK untuk memilih.
  c. Tekan ▲ atau ▼ ke `Lokasi Dalam Ruangan` dan tekan OK untuk memilih.

d. Tekan [OK] untuk mengaktifkan Lokasi Dalam Ruangan.

Layar menampilkan `Lokasi Dalam Ruangan Aktif`. Anda mendengarkan nada indikator positif.
Salah satu skenario berikut ini akan terjadi.

- Jika berhasil, ikon Lokasi Dalam Ruangan Tersedia akan muncul di tampilan layar Awal.
- Jika tidak berhasil, layar menampilkan `Pengaktifan Gagal`. Anda mendengarkan nada indikator negatif.

e. Tekan [OK] untuk menonaktifkan Lokasi Dalam Ruangan.

Layar menampilkan `Lokasi Dalam Ruangan Nonaktif`. Anda mendengarkan nada indikator positif.
Salah satu skenario berikut ini akan terjadi.

- Jika berhasil, ikon Lokasi Dalam Ruangan Tersedia akan hilang dari tampilan layar Awal.
- Jika tidak berhasil, layar menampilkan `Penonaktifan Gagal`. Anda mendengarkan nada indikator negatif.

- Akses fitur ini menggunakan tombol terprogram.

a. Tekan lama tombol **Lokasi Dalam Ruangan** terprogram untuk mengaktifkan Lokasi Dalam Ruangan.

Layar menampilkan `Lokasi Dalam Ruangan Aktif`. Anda mendengarkan nada indikator positif.
Salah satu skenario berikut ini akan terjadi.

- Jika berhasil, ikon Lokasi Dalam Ruangan Tersedia akan muncul di tampilan layar Awal.
- Jika tidak berhasil, layar menampilkan `Pengaktifan Gagal`. Jika tidak berhasil, Anda akan mendengar nada indikator negatif.

b. Tekan tombol **Lokasi Dalam Ruangan** terprogram untuk menonaktifkan Lokasi Dalam Ruangan.

Layar menampilkan `Lokasi Dalam Ruangan Nonaktif`. Anda mendengarkan nada indikator positif.

Salah satu skenario berikut ini akan terjadi.

- Jika berhasil, ikon Lokasi Dalam Ruangan Tersedia akan hilang dari tampilan layar Awal.
- Jika tidak berhasil, layar menampilkan `Penonaktifan Gagal`. Jika tidak berhasil, Anda akan mendengar nada indikator negatif.

4.10.9.2

Mengakses Informasi Suar Lokasi Dalam Ruangan

Ikuti prosedur untuk mengakses informasi suar Lokasi Dalam Ruangan.

1 Tekan OK untuk mengakses menu.

2 Tekan ▲ atau ▼ ke `Bluetooth` dan tekan OK untuk memilih.

3 Tekan ▲ atau ▼ ke `Lokasi Dalam Ruangan` dan tekan OK untuk memilih.

4 Tekan ▲ atau ▼ ke `Suar` dan tekan OK untuk memilih.

Layar menampilkan informasi suar.

4.10.10

Kontrol Multi-Site

Fitur ini berlaku bila saluran radio saat ini dikonfigurasi ke sistem Capacity Max.

4.10.10.1

Mengaktifkan Pencarian Site Manual

Jika menemukan site baru, radio akan menampilkan indikasi sebagai berikut:

- Sebuah nada positif berbunyi.

Jika menemukan site baru, radio akan menampilkan indikasi sebagai berikut:

- Sebuah nada negatif akan berbunyi.

4.10.10.2

Kunci Site Aktif/Nonaktif

Ketika diaktifkan, radio akan mencari site saat ini saja. Ketika dinonaktifkan, radio akan mencari site lain di samping site saat ini.

Tekan tombol **Kunci Site**.

Jika fungsi **Kunci Site** diaktifkan:

- Anda mendengar nada indikator positif, yang menunjukkan radio telah dikunci ke site saat ini.
- Layar akan menampilkan `Site Terkunci`.

Jika fungsi **Kunci Site** dinonaktifkan:

- Anda mendengar nada indikator negatif, menandakan bahwa radio tidak terkunci.
- Layar akan menampilkan `Site Tidak Terkunci`.

4.10.10.3

Mengakses Daftar Site Tetangga

Fitur ini memungkinkan pengguna memeriksa daftar site yang bersebelahan dengan site asal saat ini. Ikuti prosedur untuk mengakses Daftar Site Tetangga:

1. Tekan OK untuk mengakses menu.
2. Tekan ▲ atau ▼ ke `Utilitas`. Tekan OK untuk memilih.
3. Tekan ▲ atau ▼ ke `Info Radio`. Tekan OK untuk memilih.
4. Tekan ▲ atau ▼ ke `Site Tetangga`. Tekan OK untuk memilih.

4.10.11

Pengingat Saluran Rumah

Fitur ini akan mengingatkan ketika radio tidak diatur ke saluran rumah selama jangka waktu tertentu.

Jika fitur ini diaktifkan saat radio tidak diatur ke saluran rumah selama jangka waktu tertentu, hal berikut ini terjadi secara berkala:

- Nada Pengingat Saluran Rumah dan suara pengumuman berbunyi.
- Layar menampilkan `Saluran Bukan Rumah`.

4.10.11.1

Mematikan Suara Pengingat Saluran Rumah

Ketika Pengingat Saluran Rumah berbunyi, Anda dapat mematikan suaranya.

Tekan tombol **Senyapkan Pengingat Saluran Rumah** yang diprogram.

Layar menampilkan `HCR Disenyapkan`.

4.10.11.2

Mengatur Saluran Rumah Baru

Jika Pengingat Saluran Rumah terjadi, Anda dapat menetapkan saluran rumah baru.

1 Lakukan salah satu langkah berikut:

- Tekan tombol yang dapat diprogram **Atur Ulang Saluran Rumah** untuk mengatur saluran saat ini sebagai Saluran Rumah yang baru. Lompati langkah-langkah berikut ini.
  Baris pertama layar menampilkan alias saluran dan baris kedua menampilkan `Saluran Rumah Baru`.
- Tekan OK untuk mengakses menu.

2 Tekan ▲ atau ▼ ke `Utilitas`. Tekan OK untuk memilih.

3 Tekan ▲ atau ▼ ke `Pengaturan Radio`. Tekan OK untuk memilih.

4 Tekan ▲ atau ▼ ke `Saluran Rumah`. Tekan OK untuk memilih.

5 Tekan ▲ atau ▼ ke alias saluran rumah baru yang diinginkan. Tekan OK untuk memilih.

Layar menampilkan ✓ di sebelah alias saluran rumah yang dipilih.

4.10.12

Monitor Jauh

Fitur ini digunakan untuk mengaktifkan mikrofon radio target dengan alias atau ID subscriber. Anda dapat menggunakan fitur ini untuk memantau dari jauh aktivitas yang dapat didengar di sekitar radio target.

Radio Anda dan radio target harus diprogram agar Anda bisa menggunakan fitur ini.

Jika aktif, lampu LED berwarna hijau pada radio target akan berkedip satu kali. Fitur ini secara otomatis berhenti setelah durasi yang telah diprogram atau bila radio target dioperasikan oleh pengguna.

4.10.12.1

Menginisiasi Monitor Jauh

Ikuti prosedur untuk mengaktifkan Monitor Jauh di radio Anda.

1 Tekan tombol **Monitor Jauh** terprogram.

2 Tekan ▲ atau ▼ ke alias atau ID yang diinginkan. Tekan OK untuk memilih.

Layar menampilkan pemberitahuan mini transisional, yang menunjukkan permintaan sedang diproses. LED hijau akan menyala.

3 Tunggu respons.

Jika berhasil:

- Nada indikator positif akan berbunyi.
- Layar menampilkan pemberitahuan mini positif.
- Audio dari radio yang dimonitor mulai memutar durasi terprogram dan layar menampilkan `Mon. Jauh`. Setelah pencatat waktu berakhir, nada peringatan akan berbunyi dan LED akan mati.

Jika tidak berhasil:

- Nada indikator negatif akan berbunyi.
- Layar menampilkan pemberitahuan mini negatif.

4.10.12.2

Mengaktifkan Monitor Jauh Menggunakan Daftar Kontak

Ikuti prosedur untuk melakukan Monitor Jauh di radio Anda menggunakan daftar Kontak.

1 Tekan OK untuk mengakses menu.

2 Tekan ▲ atau ▼ ke Kontak.Tekan OK untuk memilih.

3 Tekan ▲ atau ▼ ke alias atau ID yang diinginkan.Tekan OK untuk memilih.

4 Tekan ▲ atau ▼ ke Mon. Jauh. Tekan OK untuk memilih.

Layar menampilkan pemberitahuan mini transisional, yang menunjukkan permintaan sedang diproses. LED hijau akan menyala.

5 Tunggu respons.

Jika berhasil:

- Nada indikator positif akan berbunyi.
- Layar menampilkan pemberitahuan mini positif.
- Audio dari radio yang dimonitor mulai memutar durasi terprogram dan layar menampilkan Mon. Monitor (Monitor Jauh). Setelah pencatat waktu berakhir, nada peringatan akan berbunyi dan LED akan mati.

Jika tidak berhasil:

- Nada indikator negatif akan berbunyi.
- Layar menampilkan pemberitahuan mini negatif.

4.10.12.3

Mengaktifkan Monitor Jauh Menggunakan Panggilan Manual

Ikuti prosedur untuk melakukan Monitor Jauh di radio Anda menggunakan panggilan manual.

1 Tekan OK untuk mengakses menu.

2 Tekan ▲ atau ▼ ke Kontak. Tekan OK untuk memilih.

3 Tekan ▲ atau ▼ ke Panggilan Manual.

Tekan OK untuk memilih.

4 Tekan ▲ atau ▼ ke Nomor Radio. Tekan OK untuk memilih.

5 Lakukan salah satu langkah berikut:

- Masukkan alias atau ID subscriber, lalu tekan OK untuk melanjutkan.
- Edit ID yang dipanggil sebelumnya, lalu tekan OK untuk melanjutkan.

6 Tekan ▲ atau ▼ ke Mon. Jauh. Tekan OK untuk memilih.

Layar menampilkan pemberitahuan mini transisional, yang menunjukkan permintaan sedang diproses. LED hijau akan menyala.

7 Tunggu respons.

Jika berhasil:

- Nada indikator positif akan berbunyi.
- Layar menampilkan pemberitahuan mini positif.
- Audio dari radio yang dimonitor mulai memutar durasi terprogram dan layar menampilkan Mon. Monitor. Setelah pencatat waktu berakhir, nada peringatan akan berbunyi dan LED akan mati.

Jika tidak berhasil:

- Nada indikator negatif akan berbunyi.
- Layar menampilkan pemberitahuan mini negatif.

4.10.13

Pengaturan Kontak

Kontak mempunyai kemampuan seperti buku telepon di radio Anda. Setiap entri berhubungan dengan suatu alias atau ID yang Anda gunakan untuk memulai panggilan. Entri diurutkan berdasar abjad.

Bergantung konteksnya, tiap entri terkait dengan jenis panggilan yang berbeda: Panggilan Grup, Panggilan Pribadi, Panggilan Siaran, Semua Panggilan Site, Semua Panggilan Multisite, Panggilan PC, atau Panggilan Dispatch.

Panggilan PC dan Panggilan Dispatch terkait dengan data. Ini hanya tersedia dengan aplikasi. Untuk detail selengkapnya, lihat dokumentasi aplikasi data.

Menu Kontak mengizinkan Anda untuk menetapkan tiap entri ke satu atau beberapa tombol angka yang dapat diprogram pada mikrofon keypad. Jika ada entri yang ditentukan ke tombol angka, radio dapat melakukan sambungan cepat pada entri itu.

PEMBERITAHUAN:
Tanda centang akan ditampilkan di depan setiap tombol angka yang ditetapkan ke entri tertentu. Jika tanda centang muncul di depan `Kosong`, berarti Anda belum menetapkan tombol angka ke entri apa pun.

Masing-masing entri dalam Kontak menampilkan informasi berikut ini:

- Jenis Panggilan
- Alias Panggilan
- ID Panggilan

PEMBERITAHUAN:
Jika fitur Privasi telah diaktifkan di suatu saluran, Anda bisa melakukan Panggilan Grup dengan privasi aktif, Panggilan Pribadi, Semua Panggilan, dan Panggilan Telepon di saluran itu. Hanya radio target dengan Kunci Privasi yang sama, atau Nilai Kunci dan ID Kunci yang sama dengan radio Anda yang dapat menguraikan transmisi tersebut.

4.10.13.1

Mengalokasikan Entri ke Tombol Angka yang Dapat Diprogram

Ikuti prosedur untuk mengalokasikan entri ke tombol angka yang dapat diprogram pada radio Anda.

1 Tekan OK untuk mengakses menu.

2 Tekan ▲ atau ▼ ke Kontak. Tekan OK untuk memilih.

3 Tekan ▲ atau ▼ ke alias atau ID yang diinginkan. Tekan OK untuk memilih.

4 Tekan ▲ atau ▼ ke Tombol Program. Tekan OK untuk memilih.

5 Lakukan salah satu langkah berikut:

- Jika tombol angka yang diinginkan belum dialokasikan untuk sebuah entri, tekan ▲ atau ▼ ke tombol angka yang diinginkan.

  Tekan OK untuk memilih.

- Jika tombol angka yang diinginkan sudah dialokasikan untuk sebuah entri, layar menampilkan Tombol Sudah Dialokasikan dan baris teks pertama menampilkan Timpa?. Lakukan salah satu langkah berikut:

  Tekan ▲ atau ▼ ke Ya. Tekan OK untuk memilih.

  Radio membunyikan nada indikator positif dan layar menampilkan Kontak Disimpan serta pemberitahuan mini positif.

  Tekan ▲ atau ▼ ke Tidak untuk kembali ke langkah sebelumnya.

Setiap entri dapat dikaitkan ke berbagai tombol angka. Anda melihat ✔ sebelum tiap tombol angka yang dialokasikan pada entri. Jika ✔ terdapat sebelum Kosong, maka tombol angka tidak ditetapkan.
Jika sebuah tombol angka dialokasikan untuk sebuah entri dalam mode tertentu, fitur ini tidak

didukung apabila Anda menekan lama tombol angka dalam mode yang lain.

Layar kembali ke menu sebelumnya secara otomatis.

4.10.13.2

Menghapus Kaitan antara Entri dan Tombol Angka yang Dapat Diprogram

Ikuti prosedur untuk menghapus kaitan antara entri dan tombol angka yang dapat diprogram pada radio Anda.

1 Lakukan salah satu langkah berikut:

- Tekan lama tombol angka terprogram ke alias atau ID yang diinginkan. Lanjutkan ke langkah 4.
- Tekan OK untuk mengakses menu.

2 Tekan atau ke Kontak. Tekan OK untuk memilih.

3 Tekan atau ke alias atau ID yang diinginkan. Tekan OK untuk memilih.

4 Tekan atau ke Tombol Program. Tekan OK untuk memilih.

5 Tekan atau ke Kosongkan. Tekan OK untuk memilih.

Baris teks pertama menampilkan Hapus dari semua tombol.

6 Tekan atau ke Ya. Tekan OK untuk memilih.

PEMBERITAHUAN:
Bila salah satu entri dihapus, kaitan antara entri tersebut dan tombol angka terprogram juga akan dihapus.

Nada indikator positif akan berbunyi. Layar akan menampilkan Kontak Disimpan.

Layar kembali ke menu sebelumnya secara otomatis.

4.10.13.3

Menambahkan Kontak Baru

Ikuti prosedur untuk menambahkan kontak baru di radio Anda.

1 Tekan OK untuk mengakses menu.

2 Tekan ▲ atau ▼ ke `Kontak`.Tekan OK untuk memilih.

3 Tekan ▲ atau ▼ ke `Kontak Baru`. Tekan OK untuk memilih.

4 Tekan ▲ atau ▼ untuk memilih jenis kontak `Kontak Radio` atau `Kontak Telepon`. Tekan OK untuk memilih.

5 Masukkan nomor kontak dengan keypad, lalu tekan OK untuk melanjutkan.

6 Masukkan nama kontak dengan keypad, lalu tekan OK untuk melanjutkan.

7 Tekan ▲ atau ▼ ke jenis dering yang diinginkan. Tekan OK untuk memilih.

Nada indikator positif akan berbunyi.Layar menampilkan pemberitahuan mini positif.

4.10.14

Pengaturan Indikator Panggilan

Fitur ini memungkinkan Anda untuk mengonfigurasi nada dering panggilan atau pesan teks.

4.10.14.1

Mengaktifkan atau Menonaktifkan Dering Panggilan untuk Panggilan Pribadi

1 Tekan OK untuk mengakses menu.

2 Tekan ▲ atau ▼ ke Utilitas. Tekan OK untuk memilih.

3 Tekan ▲ atau ▼ ke Pengaturan Radio.
Tekan OK untuk memilih.

4 Tekan ▲ atau ▼ ke Nada/Peringatan.
Tekan OK untuk memilih.

5 Tekan ▲ atau ▼ ke Dering Panggilan.
Tekan OK untuk memilih.

6 Tekan ▲ atau ▼ ke Panggilan Pribadi.
Tekan OK untuk memilih.

7 Tekan ▲ atau ▼ ke nada yang diinginkan.
Tekan OK untuk memilih.
Jika diaktifkan, ✓ muncul di sebelah Diaktifkan.
Jika dinonaktifkan, ✓ hilang dari sebelah Diaktifkan.

4.10.14.2

Mengaktifkan atau Menonaktifkan Dering Panggilan untuk Pesan Teks

1 Tekan OK untuk mengakses menu.

2 Tekan ▲ atau ▼ ke Utilitas. Tekan OK untuk memilih.

3 Tekan ▲ atau ▼ ke Pengaturan Radio.

Tekan OK untuk memilih.

4 Tekan ▲ atau ▼ ke Nada/Peringatan.

Tekan OK untuk memilih.

5 Tekan ▲ atau ▼ ke Dering Panggilan.

Tekan OK untuk memilih.

6 Tekan ▲ atau ▼ ke Pesan Teks. Tekan OK untuk memilih.

Layar menampilkan ✓ dan nada saat ini.

7 Tekan ▲ atau ▼ ke nada yang diinginkan.

Tekan OK untuk memilih. Layar menampilkan ✓ di sebelah nada yang dipilih.

4.10.14.3

Mengaktifkan atau Menonaktifkan Dering Panggilan untuk Peringatan Panggilan

1 Tekan OK untuk mengakses menu.

2 Tekan ▲ atau ▼ ke Utilitas. Tekan OK untuk memilih.

3 Tekan ▲ atau ▼ ke Pengaturan Radio.

Tekan OK untuk memilih.

4 Tekan ▲ atau ▼ ke Nada/Peringatan.

Tekan OK untuk memilih.

5 Tekan ▲ atau ▼ ke Dering Panggilan.

Tekan OK untuk memilih.

6 Tekan ▲ atau ▼ ke `Peringatan Panggilan`.

Tekan OK untuk memilih.

7 Tekan ▲ atau ▼ ke nada yang diinginkan.

Tekan OK untuk memilih. Layar menampilkan ✓ di sebelah nada yang dipilih.

4.10.14.4

Mengaktifkan atau Menonaktifkan Dering Panggilan untuk Panggilan Selektif

Ikuti prosedur untuk mengaktifkan atau menonaktifkan dering panggilan untuk Panggilan Selektif di radio Anda.

1 Tekan OK untuk mengakses menu.

2 Tekan ▲ atau ▼ ke `Utilitas`. Tekan OK untuk memilih.

3 Tekan ▲ atau ▼ ke `Pengaturan Radio`.

Tekan OK untuk memilih.

4 Tekan ▲ atau ▼ ke `Nada/Peringatan`.

Tekan OK untuk memilih.

5 Tekan ▲ atau ▼ ke `Dering Panggilan`.

Tekan OK untuk memilih.

6 Tekan ▲ atau ▼ ke `Panggilan Selektif`.

Tekan OK untuk memilih.

Layar menampilkan ✓ dan nada saat ini.

7 Tekan ▲ atau ▼ ke nada yang diinginkan.

Tekan OK untuk memilih. Layar menampilkan ✓ di sebelah nada yang dipilih.

4.10.14.5

Mengaktifkan atau Menonaktifkan Dering Panggilan untuk Status Telemetri dengan Teks

Ikuti prosedur untuk mengaktifkan atau menonaktifkan dering panggilan untuk status telemetri dengan teks di radio Anda.

1. Tekan OK untuk mengakses menu.
2. Tekan ▲ atau ▼ ke `Utilitas`. Tekan OK untuk memilih.
3. Tekan ▲ atau ▼ ke `Pengaturan Radio`.

   Tekan OK untuk memilih.
4. Tekan ▲ atau ▼ ke `Nada/Peringatan`.

   Tekan OK untuk memilih.
5. Tekan ▲ atau ▼ ke `Dering Panggilan`.

   Tekan OK untuk memilih.
6. Tekan ▲ atau ▼ ke `Telemetri`. Tekan OK untuk memilih.

   Zona saat ini akan ditandai dengan ✓.

4.10.14.6

Menetapkan Gaya Dering

Radio bisa diprogram agar membunyikan salah satu dari sebelas nada dering ketika menerima Panggilan Pribadi, Peringatan Panggilan, atau Pesan Teks dari kontak tertentu.Radio membunyikan setiap gaya dering ketika Anda menelusuri daftar ini.

1. Tekan OK untuk mengakses menu.
2. Tekan ▲ atau ▼ ke `Kontak`. Tekan OK untuk memilih.

   Entri diurutkan berdasar abjad.

3 Tekan ▲ atau ▼ ke alias atau ID yang diinginkan. Tekan OK untuk memilih.

4 Tekan ▲ atau ▼ ke `Lihat/Edit`. Tekan OK untuk memilih.

5 Tekan OK hingga layar menampilkan menu `Pendering`

Tanda ✓ menunjukkan nada yang dipilih saat ini.

6 Tekan ▲ atau ▼ ke nada yang diinginkan.

Tekan OK untuk memilih.

✓ muncul di samping nada yang dipilih.

4.10.14.7

Volume Nada Alarm yang Semakin Tinggi

Radio dapat diprogram untuk terus memberitahukan bila terdapat panggilan radio yang tidak terjawab. Hal ini dilakukan dengan otomatis meningkatkan volume nada alarm secara berkala. Fitur ini disebut Escalert.

4.10.15

Fitur Log Panggilan

Radio Anda terus mencatat semua Panggilan Pribadi keluar, yang dijawab, dan yang tidak terjawab. Fitur log panggilan digunakan untuk melihat dan mengelola panggilan terbaru.

Peringatan Panggilan Tak Terjawab dapat disertakan dapat log panggilan, tergantung konfigurasi sistem di radio Anda. Anda dapat melakukan tugas berikut ini di masing-masing daftar panggilan Anda:

- Menyimpan Alias atau ID ke Kontak
- Menghapus Panggilan
- Menghapus Semua Panggilan
- Melihat Detail

4.10.15.1

Melihat Panggilan Terbaru

1 Tekan OK untuk mengakses menu.

2 Tekan ▲ atau ▼ ke `Log Panggilan`. Tekan OK untuk memilih.

3 Tekan ▲ atau ▼ ke daftar yang diinginkan. Opsi yang tersedia adalah daftar `Tak Terjawab`, `Terjawab`, dan `Keluar`.

Tekan OK untuk memilih.

Layar akan menampilkan entri paling kini.

4 Tekan ▲ atau ▼ untuk melihat daftar.

Anda dapat memulai panggilan dengan alias atau ID yang sedang ditampilkan layar dengan menekan tombol **PTT** .

4.10.15.2

Menyimpan Alias atau ID dari Daftar Panggilan

Ikuti prosedur untuk menyimpan alias atau ID di radio Anda dari Daftar Panggilan.

1 Tekan OK untuk mengakses menu.

2 Tekan ▲ atau ▼ ke `Log Panggilan`. Tekan OK untuk memilih.

3 Tekan ▲ atau ▼ ke daftar yang diinginkan.

Tekan OK untuk memilih.

4 Tekan ▲ atau ▼ ke alias atau ID yang diinginkan. Tekan OK untuk memilih.

5 Tekan ▲ atau ▼ ke `Simpan`. Tekan OK untuk memilih.

Layar menampilkan kursor berkedip.

6 Masukkan sisa karakter dari alias yang diperlukan.

Tekan OK untuk memilih.

Anda dapat menyimpan ID tanpa alias.

Layar menampilkan pemberitahuan mini positif.

4.10.15.3

Menghapus Panggilan dari Daftar Panggilan

Ikuti prosedur untuk menghapus panggilan dari daftar Panggilan di radio Anda.

1 Tekan OK untuk mengakses menu.

2 Tekan ▲ atau ▼ ke `Log Panggilan`. Tekan OK untuk memilih.

3 Tekan ▲ atau ▼ ke daftar yang diinginkan.

Tekan OK untuk memilih.

Jika daftar kosong:

- Nada akan berbunyi.
- Layar menampilkan `Daftar Kosong`.

4 Tekan ▲ atau ▼ ke alias atau ID yang diinginkan. Tekan OK untuk memilih.

5 Tekan ▲ atau ▼ ke `Hapus Entri?`. Tekan OK untuk memilih.

6 Lakukan salah satu langkah berikut:

- Tekan OK untuk memilih `Ya` untuk menghapus entri.
  Layar menampilkan `Entri Dihapus`.
- Tekan ▲ atau ▼ ke `Tidak`. Tekan OK untuk memilih.
  Radio kembali ke layar sebelumnya.

4.10.15.4

Menghapus Semua Panggilan dari Daftar Panggilan

Ikuti prosedur untuk menghapus semua panggilan dari daftar Panggilan di radio Anda.

1 Tekan OK untuk mengakses menu.

2 Tekan ▲ atau ▼ ke `Log Panggilan`. Tekan OK untuk memilih.

3 Tekan ▲ atau ▼ ke daftar yang diinginkan. Tekan OK untuk memilih.

4 Tekan ▲ atau ▼ ke alias atau ID yang diinginkan. Tekan OK untuk memilih.

5 Tekan ▲ atau ▼ ke `Hapus Semua`. Tekan OK untuk memilih.

6 Lakukan salah satu langkah berikut:

- Tekan OK untuk memilih `Ya` untuk menghapus semua entri.
  Layar menampilkan pemberitahuan mini positif.
- Tekan ▲ atau ▼ ke `Tidak`. Tekan OK untuk memilih.
  Radio kembali ke layar sebelumnya.

4.10.15.5

Melihat Detail dari Daftar Panggilan

Ikuti prosedur untuk melihat detail di radio Anda dari daftar Panggil.

1 Tekan OK untuk mengakses menu.

2 Tekan ▲ atau ▼ ke `Log Panggilan`. Tekan OK untuk memilih.

3 Tekan ▲ atau ▼ ke daftar yang diinginkan. Tekan OK untuk memilih.

4 Tekan ▲ atau ▼ ke alias atau ID yang diinginkan. Tekan OK untuk memilih.

5 Tekan ▲ atau ▼ ke `Lihat Detail`. Tekan OK untuk memilih.

Layar menampilkan detail.

4.10.16

Operasi Peringatan Panggilan

Penyerantaan Peringatan Panggilan memungkinkan Anda mengingatkan pengguna radio tertentu untuk memanggil Anda kembali ketika dia bisa melakukannya.

Fitur ini hanya tersedia untuk alias atau ID subscriber dan dapat diakses melalui menu menggunakan Kontak, panggilan manual, atau tombol terprogram **Akses Satu Sentuhan**.

Di Capacity Max, fitur Peringatan Panggilan memungkinkan pengguna radio atau dispatcher mengirim peringatan ke pengguna radio lain dengan meminta pengguna radio tersebut memanggil balik pengguna radio yang memulai panggilan jika tersedia. Komunikasi suara tidak ada dalam fitur ini.

Operasi Peringatan Panggilan dapat dikonfigurasi oleh penyalur atau administrator sistem dalam dua cara:

- Radio dikonfigurasi untuk mengizinkan Anda menekan tombol **PTT** untuk merespons langsung ke inisiator panggilan dengan melakukan Panggilan Pribadi.
- Radio dikonfigurasi untuk mengizinkan Anda menekan tombol **PTT** dan melanjutkan komunikasi Grup Bicara lain. Menekan tombol **PTT** pada entri peringatan panggilan tidak akan mengizinkan pengguna merespons inisiator panggilan. Pengguna harus bernavigasi ke opsi Log Panggilan Tak Terjawab di menu Log Panggilan dan merespons Peringatan Panggilan dari situ.

Panggilan pribadi Penyiapan Panggilan Off Air (OACSU) memungkinkan pengguna merespons langsung, sedangkan panggilan pribadi Penyiapan Panggilan Off Air Penuh (FOACSU) memerlukan respons pengguna untuk panggilan tersebut. Karenanya, panggilan jenis OACSU direkomendasikan untuk digunakan dengan fitur

Peringatan Panggilan. Lihat Panggilan Pribadi di halaman 82 .

4.10.16.1

Melakukan Peringatan Panggilan

Ikuti prosedur untuk melakukan Peringatan Panggilan di radio Anda.

1 Tekan tombol **Akses Satu Sentuhan** terprogram.

Layar menampilkan `Peringatan Panggilan` dan alias atau ID subscriber. LED hijau akan menyala.

2 Tunggu respons.

Jika respons Peringatan Panggilan diterima, layar akan menampilkan pemberitahuan mini positif.

Jika respons Peringatan Panggilan tidak diterima, layar akan menampilkan pemberitahuan mini negatif.

4.10.16.2

Membuat Peringatan Panggilan Menggunakan Daftar Kontak

1 Tekan OK untuk mengakses menu.

2 Tekan ▲ atau ▼ ke `Kontak`. Tekan OK untuk memilih.

3 Tekan ▲ atau ▼ ke alias atau ID yang diinginkan. Tekan OK untuk memilih.

4 Tekan ▲ atau ▼ ke `Peringatan Panggilan`. Tekan OK untuk memilih.

Layar menampilkan `Peringatan Panggilan` dan alias atau ID subscriber. LED hijau akan menyala.

5 Tunggu respons.

- Jika respons diterima, layar akan menampilkan pemberitahuan mini positif.

- Jika respons tidak diterima, layar akan menampilkan pemberitahuan mini negatif.

4.10.16.3

Merespons Peringatan Panggilan

Ketika Anda menerima Peringatan Panggilan:

- Nada berulang akan berbunyi.
- LED kuning akan berkedip.
- Layar menampilkan daftar notifikasi yang berisi Peringatan Panggilan dengan alias atau ID radio pemanggil.

  Bergantung pada konfigurasi oleh dealer atau administrator sistem, Anda dapat merespons Peringatan Panggilan dengan melakukan salah satu hal berikut:

  - Tekan tombol **PTT** dan respons dengan Panggilan Pribadi secara langsung ke pemanggil.
  - Tekan tombol **PTT** untuk melanjutkan komunikasi grup bicara normal.
    Peringatan Panggilan dipindahkan ke opsi Panggilan Tak Terjawab di menu Log. Anda dapat merespons pemanggil dari log Panggilan Tak Terjawab.

Lihat Daftar Notifikasi di halaman 205 dan Fitur Log Panggilan di halaman 140 untuk informasi selengkapnya.

4.10.17

Alias Pemanggil Dinamis

Fitur ini memungkinkan Anda untuk mengedit Alias Pemanggil secara dinamis dari panel depan radio Anda.

PEMBERITAHUAN:
Mikrofon keypad diperlukan untuk menjalankan fitur ini.

Saat melakukan panggilan, radio penerima menampilkan Alias Pemanggil radio yang melakukan transmisi.

Daftar Alias Pemanggil bisa menyimpan hingga 500 Alias Pemanggil dari radio yang melakukan transmisi. Anda bisa menampilkan atau melakukan Panggilan Pribadi dari daftar Alias Pemanggil. Ketika Anda mematikan radio, riwayat Alias Pemanggil yang menerima dihapus dari daftar Alias Pemanggil.

4.10.17.1

Menampilkan Daftar Alias Pemanggil

Anda bisa mengakses daftar Alias Pemanggil untuk melihat detail Alias Pemanggil yang melakukan transmisi.

1. Tekan OK untuk mengakses menu.
2. Tekan ▲ atau ▼ ke `Alias Pemanggil`.
   Tekan OK untuk memilih.
3. Tekan ▲ atau ▼ ke daftar yang diinginkan.
   Tekan OK untuk memilih.
4. Tekan ▲ atau ▼ ke `Lihat Detail`. Tekan OK untuk memilih.

4.10.17.2

Memulai Panggilan Pribadi dari Daftar Alias Pemanggil

Anda bisa mengakses daftar Alias Pemanggil untuk memulai Panggilan Pribadi.

1. Tekan OK untuk mengakses menu.
2. Tekan ▲ atau ▼ ke `Alias Pemanggil`.
   Tekan OK untuk memilih.
3. Tekan ▲ atau ▼ ke ***<Alias Pemanggil yang diinginkan>***.
4. Untuk memanggil, tekan dan tahan tombol **PTT**.

4.10.18

Mode Bisu

Mode Bisu memungkinkan untuk membisukan semua indikator audio di radio Anda.

Setelah Mode Bisu aktif, semua indikator audio dibisukan, kecuali fitur dengan prioritas lebih tinggi misalnya operasi darurat.

Setelah keluar dari Mode Bisu, radio Anda melanjutkan pemutaran nada dan transmisi audio.

PENTING:
Pengguna hanya dapat mengaktifkan Face Down atau Man Down pada satu waktu. Kedua fitur tidak dapat diaktifkan secara bersamaan.

4.10.18.1

Mengaktifkan Mode Bisu

Ikuti prosedur untuk menonaktifkan Mode Bisu.

Akses fitur ini menggunakan tombol **Mode Bisu** terprogram.

Hal berikut mungkin terjadi saat Mode bisu aktif:

- Nada Indikator Positif Akan Berbunyi.
- Layar menampilkan `Mode Bisu Aktif`.
- Lampu LED berwarna merah akan terus berkedip hingga Anda keluar dari Mode Bisu.
- Layar menampilkan ikon **Mode Bisu** di layar utama.
- Radio dibisukan.
- Pewaktu Mode Bisu mulai menghitung mundur dengan durasi yang dikonfigurasikan.

4.10.18.2

Menyetel Pewaktu Mode Bisu

Fitur Mode Bisu dapat diaktifkan dalam waktu yang telah dikonfigurasikan terlebih dahulu dengan menyetel Pewaktu Mode Bisu. Durasi pewaktu dikonfigurasikan di menu radio dengan rentang antara 0,5–6 jam. Anda akan dikeluarkan dari Mode Bisu setelah pewaktu kedaluwarsa.

Jika pewaktu habis pada angka 0, radio tetap berada dalam Mode bisu selama waktu yang tidak ditentukan hingga tombol **Mode Bisu** terprogram ditekan.

1. Tekan OK untuk mengakses menu.
2. Tekan ▲ atau ▼ ke `Utilitas`. Tekan OK untuk memilih.
3. Tekan ▲ atau ▼ ke `Pengaturan Radio`. Tekan OK untuk memilih.

4 Tekan ▲ atau ▼ ke `Pewaktu Mode Bisu`.
Tekan OK untuk memilih.

5 Tekan ▲ atau ▼ untuk mengedit nilai angka setiap digit, lalu tekan OK .

4.10.18.3

Keluar dari Mode Bisu

Fitur ini dapat dikeluarkan secara otomatis setelah Pewaktu Mode Bisu kedaluwarsa.

Lakukan salah satu hal berikut untuk keluar dari Mode bisu secara manual:

- Tekan tombol **Mode Bisu** terprogram.
- Tekan tombol **PTT** pada entri apa pun.

Hal berikut akan terjadi saat Mode bisu nonaktif:

- Nada Indikator Negatif Akan Berbunyi.
- Layar menampilkan `Mode Bisu Nonaktif`.
- Lampu LED berwarna merah mati.
- Ikon **Mode Bisu** hilang dari layar utama.
- Radio menghidupkan suara dan status speaker dipulihkan.
- Jika pewaktu belum kedaluwarsa, Pewaktu mode bisu dihentikan.

PEMBERITAHUAN:
Pengguna juga dikeluarkan dari Mode Bisu jika mengirimkan suara atau beralih ke saluran yang belum terprogram.

4.10.19

Pengoperasian Darurat

Alarm Darurat digunakan untuk menunjukkan situasi genting. Anda dapat menginisiasi keadaan Darurat setiap saat, walaupun terdapat aktivitas pada saluran aktif.

Di Capacity Max, radio penerima hanya dapat mendukung satu Alarm Darurat dalam satu waktu. Jika dimulai, Alarm Darurat kedua akan menimpa alarm pertama.

Ketika radio menerima Alarm Darurat, penerima dapat memilih untuk menghapus alarm dan keluar dari Daftar Alarm, atau merespons Alarm Darurat dengan menekan tombol **PTT** dan memancarkan suara non-darurat.

Dealer atau administrator sistem Anda bisa mengatur durasi penekanan tombol untuk tombol **Darurat** terprogram, kecuali untuk penekanan lama, yang sama dengan semua tombol lainnya:

Tekan Sebentar
Durasi antara 0,05 hingga 0,75 detik.

Tekan Lama
Durasi antara 1,00 hingga 3,75 detik.

Tombol **Darurat** ditetapkan ke fitur Darurat Aktif/Tidak Aktif. Tanyakan kepada dealer tentang pengoperasian yang ditetapkan dari tombol **Darurat**.

PEMBERITAHUAN:
Jika penekanan singkat dari tombol **Darurat** ditetapkan untuk menghidupkan mode Darurat, penekanan lama tombol **Darurat** ditetapkan untuk keluar dari mode Darurat.

Jika penekanan lama dari tombol **Darurat** ditetapkan untuk menghidupkan mode Darurat, penekanan singkat tombol **Darurat** ditetapkan untuk keluar dari mode Darurat.

Radio Anda mendukung tiga Alarm Darurat:

- Alarm Darurat
- Alarm Darurat dengan Panggilan
- Alarm Darurat dengan Suara untuk Diikuti

Selain itu, tiap alarm mempunyai jenis berikut:

Reguler
Radio mentransmisikan sinyal alarm dan menunjukkan indikator audio dan/atau visual.

Senyap
Radio mentransmisikan sinyal alarm tanpa ada indikator audio atau visual. Radio menerima panggilan tanpa suara apa pun melalui speaker, sampai periode transmisi terprogram *hot mic* berakhir dan/atau Anda menekan tombol **PTT**.

Senyap dengan Suara
Radio mentransmisikan sinyal alarm tanpa indikator audio atau visual apa pun, namun mengizinkan panggilan masuk berbunyi melalui speaker.

PEMBERITAHUAN:
Hanya salah **satu** dari Alarm Darurat di atas dapat ditetapkan untuk tombol **Darurat** yang telah diprogram atau sakelar kaki Darurat.

4.10.19.1

Mengirim Alarm Darurat

Dengan fitur ini Anda bisa mengirim Alarm Darurat, sinyal non-suara, yang memicu indikasi peringatan pada sebuah grup radio. Ikuti prosedur untuk mengirim Alarm Darurat di radio Anda.

Radio Anda tidak menampilkan indikator audio maupun visual selama mode Darurat bila radio diatur ke Senyap.

1 Tekan tombol **Darurat Aktif** terprogram.

Anda akan melihat salah satu hasil berikut:

- Layar menampilkan `Alarm Tx` dan alias tujuan.
- Layar menampilkan `Telegram Tx` dan alias tujuan.

LED hijau akan menyala. Ikon **Darurat** muncul.

PEMBERITAHUAN:
Jika diprogram, nada Pencarian Darurat akan berbunyi. Nada ini disenyapkan ketika radio memancarkan atau menerima suara, dan berhenti ketika radio keluar dari mode Darurat. Nada Pencarian Darurat dapat diprogram oleh penyalur atau administrator sistem.

2 Tunggu respons.

Jika berhasil:

- Nada Darurat akan berbunyi.
- LED akan berkedip hijau.
- Layar menampilkan `Alarm Terkirim`.

Jika tidak berhasil setelah batas mencoba tercapai:

- Nada akan berbunyi.
- Layar menampilkan `Alarm Gagal`.

Radio keluar dari mode Alarm Darurat dan kembali ke layar Awal.

PEMBERITAHUAN:
Ketika dikonfigurasikan untuk Alarm Darurat saja, proses darurat hanya terdiri dari pengiriman Alarm Darurat. Status darurat berakhir bila ada pengakuan yang diterima dari sistem, atau bila jumlah upaya akses saluran telah mencapai batas.

Tidak ada panggilan suara yang dikaitkan dengan pengiriman Alarm Darurat ketika beroperasi sebagai Alarm Darurat Saja.

4.10.19.2

Mengirim Alarm Darurat dengan Panggilan

Dengan fitur ini Anda bisa mengirim Alarm Darurat dengan Panggilan ke sekelompok radio atau dispatcher. Setelah infrastruktur dalam grup itu memberi respons, sekelompok radio dapat berkomunikasi melalui saluran Darurat terprogram.

Radio harus dikonfigurasi untuk Alarm Darurat dan Panggilan agar dapat melakukan panggilan darurat setelah proses alarm.

1 Tekan tombol **Darurat Aktif** yang diprogram.

Layar menampilkan `Alarm Tx` dan alias tujuan. Ikon **Darurat** muncul.LED hijau akan menyala.

PEMBERITAHUAN:
Jika radio diprogram, nada Pencarian Darurat akan berbunyi. Nada ini disenyapkan ketika radio memancarkan atau menerima suara, dan berhenti ketika radio keluar dari mode Darurat.

Jika respons Alarm Darurat berhasil diterima:

- Nada Darurat akan berbunyi.
- LED akan berkedip hijau.
- Layar menampilkan `Alarm Terkirim`.
- Radio masuk ke mode panggilan Darurat ketika layar menampilkan `Darurat` dan alias grup tujuan.

Jika respons Alarm Darurat tidak berhasil diterima:

- Upaya mencoba lagi telah digunakan semua.
- Suara bernada rendah akan berbunyi.
- Layar menampilkan `Alarm Gagal`.

- Radio keluar dari mode Alarm Darurat.

2 Tekan tombol **PTT** untuk memulai transmisi suara.

LED hijau akan menyala.Layar menampilkan ikon **Panggilan Grup**.

3 Lakukan salah satu langkah berikut:

- Tunggu hingga Nada Izin Bicara selesai dan bicaralah dengan jelas ke mikrofon, jika diaktifkan.
- Tunggu hingga Sidetone **PTT** selesai dan bicaralah dengan jelas ke mikrofon, jika diaktifkan.

4 Lepaskan tombol **PTT** untuk mendengarkan.

Layar menampilkan alias pemanggil dan grup.

5 Tekan tombol **PTT** untuk menjawab panggilan.

Jika fitur Indikasi Saluran Bebas diaktifkan, nada peringatan singkat akan berbunyi saat pengguna radio yang melakukan transmisi melepaskan tombol **PTT**, yang menunjukkan saluran bebas dapat Anda gunakan untuk merespons.

6 Tekan tombol **Darurat Nonaktif** untuk keluar dari mode Darurat.

Radio Anda kembali ke layar Awal.

PEMBERITAHUAN:
Bergantung pada bagaimana radio Anda diprogram, Anda mungkin dapat atau tidak dapat mendengar nada Izin Bicara. Dealer radio atau administrator sistem Anda dapat memberikan informasi lebih lanjut tentang bagaimana radio Anda diprogram untuk Darurat.

Pembuat Panggilan Darurat dapat menekan tombol untuk mengakhiri panggilan darurat yang sedang berlangsung. Radio kembali ke status panggilan diam tetapi layar panggilan darurat tetap terbuka.

4.10.19.3

Mengirim Alarm Darurat dengan Panduan Suara

Dengan fitur ini Anda bisa mengirim Alarm Darurat dengan Suara untuk Diikuti ke sekelompok radio. Mikrofon radio diaktifkan secara otomatis, yang memungkinkan Anda berkomunikasi dengan grup radio tanpa menekan tombol **PTT**. Keadaan mikrofon yang diaktifkan ini disebut *hot mic*.

PEMBERITAHUAN:
Radio Anda tidak dapat mendeteksi mikrofon non-IMPRES yang terpasang ke konektor aksesori belakang.
Bila tidak ada mikrofon yang terdeteksi pada konektor terprogram yang ditentukan, radio memeriksa konektor alternatif. Di sini, radio memberikan prioritas pada mikrofon yang terdeteksi.

Jika radio Anda telah mengaktifkan Mode Siklus Darurat, pengulangan *hot mic* dan periode penerimaan dilakukan selama durasi yang sudah diprogram. Selama Mode Siklus Darurat, panggilan yang diterima terdengar melalui speaker.

Jika tombol **PTT** ditekan selama jangka waktu penerimaan yang telah diprogram, Anda akan mendengar nada dilarang bicara, yang menunjukkan bahwa Anda harus melepas tombol **PTT**. Radio mengabaikan penekanan tombol **PTT** dan tetap dalam mode Darurat.

Jika Anda menekan tombol **PTT** selama *hot mic*, dan terus menekannya setelah durasi *hot mic* habis, radio terus mengirim transmisi sampai Anda melepas tombol **PTT**.

Jika permintaan Alarm Darurat gagal, radio tidak mencoba lagi mengirim permintaan, dan langsung masuk ke keadaan *hot mic*.

PEMBERITAHUAN:
Sebagian aksesori mungkin tidak mendukung *hot mic*. Tanyakan kepada dealer atau administrator sistem Anda untuk informasi selengkapnya.

Ikuti prosedur untuk mengirim Alarm Darurat dengan panduan suara di radio Anda.

1. Tekan tombol terprogram **Darurat Aktif** atau sakelar kaki **Darurat**.

   Anda akan melihat satu dari hasil berikut ini:

   - Layar menampilkan `Alarm Tx` dan alias tujuan.
   - Layar menampilkan `Telegram Tx` dan alias tujuan.

LED hijau akan menyala. Ikon **Darurat** muncul.

2 Setelah layar menampilkan `Alarm Terkirim`, berbicaralah dengan jelas ke mikrofon.

Radio menghentikan transmisi secara otomatis apabila:

- Setelah durasi siklus antara *hot mic* dan menerima panggilan habis, jika Mode Siklus Darurat diaktifkan.
- Setelah durasi *hot mic* habis, jika Mode Siklus Darurat dinonaktifkan.

3 Tekan tombol **Darurat Nonaktif** untuk keluar dari mode Darurat.

Radio kembali ke layar Awal.

4.10.19.4

Menerima Alarm Darurat

Radio penerima hanya dapat mendukung satu Alarm Darurat dalam satu waktu. Jika dimulai, Alarm Darurat kedua akan menimpa alarm pertama. Ikuti prosedur untuk menerima dan melihat Alarm Darurat di radio Anda.

Ketika Anda menerima Alarm Darurat:

- Nada akan berbunyi.
- LED merah berkedip.
- Layar menampilkan Daftar Alarm Darurat, ID atau alias Grup Bicara Darurat, dan ID atau alias radio pemancar.

1 Tekan OK untuk melihat alarm.

2 Tekan OK untuk melihat opsi tindakan dan detail entri di Daftar Alarm.

3 Tekan dan pilih `Ya` untuk keluar dari Daftar alarm.

Radio akan kembali ke layar awal dengan **Ikon Darurat** ditampilkan di bagian atas, yang menunjukkan Alarm Darurat yang belum ditangani. **Ikon Darurat** akan hilang setelah entri di Daftar Alarm dihapus.

4 Tekan OK untuk mengakses menu.

5 Pilih `Daftar Alarm` untuk kembali ke daftar Alarm.

6 Nada berbunyi dan LED merah berkedip sampai Anda keluar dari mode Darurat. Namun, nada tersebut dapat dimatikan. Lakukan salah satu langkah berikut:

- Tekan tombol **PTT** untuk memanggil grup radio yang menerima Alarm Darurat.
- Tekan sembarang tombol yang dapat diprogram.

4.10.19.5

Merespons Alarm Darurat

Ketika radio menerima Alarm Darurat, penerima dapat memilih untuk menghapus alarm dan keluar dari Daftar Alarm, atau merespons Alarm Darurat dengan menekan tombol **PTT** dan memancarkan suara non-darurat. Ikuti prosedur untuk merespons Panggilan Darurat di radio Anda.

1 Jika Indikasi Alarm Darurat diaktifkan, Daftar Alarm Darurat muncul saat radio menerima Alarm Darurat.

Tekan ▲ atau ▼ ke alias atau ID yang diinginkan.

2 Jika fitur Indikasi Saluran Bebas diaktifkan, nada peringatan singkat akan berbunyi saat pengguna radio yang melakukan transmisi melepaskan tombol **PTT**, yang menunjukkan saluran bebas dapat Anda gunakan untuk merespons. Tekan tombol **PTT** untuk melakukan transmisi suara non-darurat ke grup yang sama dengan target Alarm Darurat.

LED hijau akan menyala.

3 Lakukan salah satu langkah berikut:

- Tunggu hingga Nada Izin Bicara selesai dan bicaralah dengan jelas ke mikrofon, jika diaktifkan.
- Tunggu hingga Sidetone **PTT** selesai dan bicaralah dengan jelas ke mikrofon, jika diaktifkan.

4 Lepaskan tombol **PTT** untuk mendengarkan.

Ketika radio yang memulai darurat merespons:

- LED merah berkedip.

- Layar menampilkan ikon **Panggilan Darurat**, ID atau alias Grup Bicara Darurat, dan ID atau alias radio pemancar.

PEMBERITAHUAN:
Jika Indikasi Panggilan Darurat tidak diaktifkan, layar menampilkan ikon **Panggilan Grup**, ID atau alias Grup Bicara Darurat, dan ID atau alias radio pemancar.

4.10.19.6

Merespons Alarm Darurat dengan Panggilan

Ikuti prosedur untuk merespons Alarm Darurat dengan Panggilan di radio Anda.

Ketika Anda menerima Panggilan Darurat:

- Nada Panggilan Darurat berbunyi jika Indikasi Panggilan Darurat dan Nada Dekode Panggilan Darurat diaktifkan. Nada Panggilan Darurat tidak akan berbunyi jika hanya Indikasi Panggilan Darurat yang diaktifkan.
- Layar menampilkan ikon **Panggilan Darurat** di sudut kanan atas.
- Baris teks menunjukkan ID atau alias Grup Bicara Darurat dan ID atau alias radio pemancar.
- Radio bersuara dan panggilan masuk berbunyi melalui speaker.

1. Jika fitur Indikasi Saluran Bebas diaktifkan, nada peringatan singkat akan berbunyi saat pengguna radio yang melakukan transmisi melepaskan tombol **PTT**, yang menunjukkan saluran bebas dapat Anda gunakan untuk merespons. Tekan tombol **PTT** untuk menjawab panggilan.

   LED hijau akan menyala.

2. Tunggu hingga Nada Izin Bicara selesai dan bicaralah dengan jelas ke mikrofon, jika diaktifkan.

3. Lepaskan tombol **PTT** untuk mendengarkan.

   Ketika radio yang memulai darurat merespons:

   - LED merah berkedip.

- Layar menampilkan ikon **Panggilan Darurat**, ID atau alias Grup Bicara Darurat, dan ID atau alias radio pemancar.

PEMBERITAHUAN:
Jika Indikasi Panggilan Darurat tidak diaktifkan, layar menampilkan ikon **Panggilan Grup**, ID atau alias Grup Bicara Darurat, dan ID atau alias radio pemancar.

4.10.19.7

Keluar dari Mode Darurat

Tekan tombol terprogram **Mati Darurat**.

Radio Anda menampilkan indikasi berikut:

- Nada berhenti.
- LED merah mati.
- Saat pemberitahuan diterima, layar radio yang mengirimkan transmisi menampilkan `Batalkan Darurat Berhasil`. Jika tidak ada pemberitahuan yang diterima, layar akan menampilkan `Batalkan Darurat Gagal`.

PEMBERITAHUAN:
Jika konfigurasi Batalkan Darurat diaktifkan pada radio yang mengirim transmisi, alarm darurat dalam radio penerima akan berhenti dan status ditambahkan ke Daftar Alarm radio penerima.

4.10.20

Pesan Status

Fitur ini memungkinkan pengguna untuk mengirim pesan status ke radio lain.

Daftar Status Cepat dikonfigurasikan menggunakan CPS-RM dan berisi hingga maksimal 99 status.

Panjang maksimal tiap pesan status adalah 16 karakter.

PEMBERITAHUAN:
Setiap status memiliki nilai digital yang sesuai dengan rentang antara 0–99. Alias dapat ditetapkan ke setiap status untuk referensi yang mudah.

4.10.20.1

Mengirim Pesan Status

Ikuti prosedur berikut untuk mengirim pesan status.

1 Lakukan salah satu langkah berikut:

- Tekan tombol **Akses Satu Sentuhan** terprogram. Lompati langkah-langkah berikut ini.
- Tekan OK untuk mengakses menu.

2 Tekan ▲ atau ▼ ke `Status`. Tekan OK untuk memilih.

3 Tekan ▲ atau ▼ ke `Status Cepat`. Tekan OK untuk memilih.

4 Tekan ▲ atau ▼ ke pesan status yang diinginkan. Tekan OK untuk memilih.

5 Tekan ▲ atau ▼ ke alias atau ID subscriber, atau alias atau ID grup yang diinginkan. Tekan OK untuk memilih.

Jika berhasil:

- Nada indikator positif akan berbunyi.
- LED mati.
- Layar menampilkan pemberitahuan mini positif sebelum kembali ke layar `Status Cepat`.
- Layar menampilkan ✔ di sebelah pesan status yang dikirim.

Jika tidak berhasil:

- Nada indikator negatif akan berbunyi.
- LED mati.
- Layar menampilkan pemberitahuan kegagalan sebelum kembali ke layar `Status Cepat`.

4.10.20.2

Mengirim Pesan Status Menggunakan Tombol yang Dapat Diprogram

Ikuti panduan pengiriman pesan status menggunakan tombol yang dapat diprogram.

1 Tekan tombol **Pesan Status** terprogram.

2 Tekan ▲ atau ▼ ke pesan status yang diinginkan. Tekan OK untuk memilih. Daftar kontak ditampilkan

3 Tekan ▲ atau ▼ ke alias atau ID subscriber, atau alias atau ID grup yang diinginkan. Tekan OK untuk memilih.

Jika berhasil:

- Nada indikator positif akan berbunyi.
- LED mati.
- Layar menampilkan pemberitahuan mini positif sebelum kembali ke layar `Status Cepat`.
- Layar menampilkan ✓ di sebelah status yang dikirim.

Jika tidak berhasil:

- Nada indikator negatif akan berbunyi.
- LED mati.
- Layar menampilkan pemberitahuan kegagalan sebelum kembali ke layar `Status Cepat`.

4.10.20.3

Mengirim Pesan Status Menggunakan Daftar Kontak

Ikuti prosedur untuk mengirim pesan status radio menggunakan daftar kontak.

1 Tekan OK untuk mengakses menu.

2 Tekan ▲ atau ▼ ke `Kontak`. Tekan OK untuk memilih.

3 Tekan ▲ atau ▼ ke alias atau ID subscriber, atau alias atau ID grup yang diinginkan. Tekan OK untuk memilih.

4 Tekan ▲ atau ▼ ke `Kirim Status`. Tekan OK untuk memilih.

5 Tekan ▲ atau ▼ ke pesan status yang diinginkan. Tekan OK untuk memilih.

Jika berhasil:

- Nada indikator positif akan berbunyi.
- LED mati.
- Layar menampilkan pemberitahuan mini positif sebelum kembali ke layar `Status Cepat`.
- Layar menampilkan ✓ di sebelah status yang dikirim.

Jika tidak berhasil:

- Nada indikator negatif akan berbunyi.
- LED mati.
- Layar menampilkan pemberitahuan kegagalan sebelum kembali ke layar `Status Cepat`.

4.10.20.4

Mengirim Pesan Status Menggunakan Panggilan Manual

Ikuti prosedur untuk mengirim pesan status menggunakan panggilan manual.

1. Tekan OK untuk mengakses menu.
2. Tekan ▲ atau ▼ ke `Kontak`. Tekan OK untuk memilih.
3. Tekan ▲ atau ▼ ke `Panggilan Manual`. Tekan OK untuk memilih.
4. Tekan ▲ atau ▼ ke `Nomor Radio`. Tekan OK untuk memilih.
5. Masukkan alias atau ID subscriber, atau alias atau ID grup, lalu tekan OK untuk melanjutkan.
6. Tekan ▲ atau ▼ ke `Kirim Status`. Tekan OK untuk memilih.
7. Tekan ▲ atau ▼ ke pesan status yang diinginkan. Tekan OK untuk memilih.

Jika berhasil:

- Nada indikator positif akan berbunyi.

- LED mati.
- Layar menampilkan pemberitahuan mini positif sebelum kembali ke layar `Status Cepat`.
- Layar menampilkan ✓ di sebelah status yang dikirim.

Jika tidak berhasil:

- Nada indikator negatif akan berbunyi.
- LED mati.
- Layar menampilkan pemberitahuan kegagalan sebelum kembali ke layar `Status Cepat`.

4.10.20.5

Melihat Pesan Status

Ikuti prosedur untuk melihat pesan status.

1. Tekan OK untuk mengakses menu.
2. Tekan ▲ atau ▼ ke `Status`. Tekan OK untuk memilih.
3. Tekan ▲ atau ▼ ke `Kotak Masuk`. Tekan OK untuk memilih.
4. Tekan ▲ atau ▼ ke pesan status yang diinginkan. Tekan OK untuk memilih.

   Isi pesan status ditampilkan kepada pengguna radio.

Pesan status yang diterima juga dapat dilihat dengan mengakses Daftar Notifikasi. Lihat Daftar Notifikasi di halaman 205 untuk informasi selengkapnya.

4.10.20.6

Menanggapi Pesan Status

Ikuti prosedur untuk membalas pesan status.

1. Tekan OK untuk mengakses menu.
2. Tekan ▲ atau ▼ ke `Status`. Tekan OK untuk memilih.

3 Tekan ▲ atau ▼ ke `Kotak Masuk`. Tekan OK untuk memilih.

4 Tekan ▲ atau ▼ ke pesan status yang diinginkan. Tekan OK untuk memilih.

5 Isi status akan ditampilkan. Tekan OK untuk memilih.

6 Tekan ▲ atau ▼ ke `Balas`. Tekan OK untuk memilih.

7 Tekan ▲ atau ▼ ke pesan status yang diinginkan. Tekan OK untuk memilih.

Jika berhasil:

- Nada indikator positif akan berbunyi.
- LED mati.
- Layar menampilkan pemberitahuan mini positif sebelum kembali ke layar `Kotak Masuk`.

Jika tidak berhasil:

- Nada indikator negatif akan berbunyi.
- LED mati.
- Layar menampilkan pemberitahuan mini positif sebelum kembali ke layar `Kotak Masuk`.

4.10.20.7
Menghapus Pesan Status

Ikuti prosedur untuk menghapus pesan status dari radio Anda.

1 Tekan OK untuk mengakses menu.

2 Tekan ▲ atau ▼ ke `Status`. Tekan OK untuk memilih.

3 Tekan ▲ atau ▼ ke `Kotak Masuk`. Tekan OK untuk memilih.

4 Tekan ▲ atau ▼ ke pesan status yang diinginkan. Tekan OK untuk memilih.

5 Isi status akan ditampilkan. Tekan OK untuk memilih.

6 Tekan ▲ atau ▼ ke Hapus. Tekan OK untuk memilih.

7 Tekan ▲ atau ▼ keYa. Tekan OK untuk memilih.

- Layar menampilkan pemberitahuan mini positif sebelum kembali ke layar Kotak Masuk.

4.10.20.8

Menghapus Semua Pesan Status

Ikuti prosedur untuk menghapus semua pesan status dari radio Anda.

1 Tekan OK untuk mengakses menu.

2 Tekan ▲ atau ▼ ke Status. Tekan OK untuk memilih.

3 Tekan ▲ atau ▼ ke Kotak Masuk. Tekan OK untuk memilih.

4 Tekan ▲ atau ▼ ke Hapus Semua. Tekan OK untuk memilih.

5 Tekan ▲ atau ▼ ke Ya. Tekan OK untuk memilih.

- Layar menampilkan Daftar Kosong.

4.10.21

Pengolahan Pesan Teks

Radio Anda mampu menerima data, misalnya pesan teks, dari radio lain atau aplikasi pesan teks.

Ada dua jenis pesan teks, Pesan Teks Singkat Radio Mobile Digital (DMR) dan pesan teks. Panjang maksimal Pesan Teks Singkat DMR adalah 23 karakter. Panjang

maksimum pesan teks adalah 280 karakter, termasuk baris subjek. Baris subjek hanya muncul saat Anda menerima pesan dari aplikasi email.

PEMBERITAHUAN:
Panjang karakter maksimum hanya berlaku untuk model dengan perangkat lunak dan perangkat keras terbaru. Untuk model radio dengan perangkat lunak dan perangkat keras lama, panjang maksimum pesan teks adalah 140 karakter. Untuk informasi lebih lanjut, hubungi dealer Anda.

4.10.21.1

Pesan Teks

Pesan teks disimpan di Kotak Masuk, dan diurutkan sesuai pesan yang paling baru.

Radio keluar dari layar saat ini setelah pencatat waktu nonaktif berakhir. Untuk kembali ke layar Awal, tekan lama kapan saja.

4.10.21.1.1

Melihat Pesan Teks

1. Tekan OK untuk mengakses menu.
2. Tekan atau ke Pesan. Tekan OK untuk memilih.
3. Tekan atau ke Kotak Masuk. Tekan OK untuk memilih.

   Jika Kotak Masuk kosong:

   - Layar menampilkan Daftar Kosong.
   - Nada akan berbunyi jika Nada Keypad diaktifkan.
4. Tekan atau ke pesan yang diperlukan.

   Tekan OK untuk memilih.

   Layar menampilkan baris subjek jika pesan berasal dari aplikasi e-mail.

4.10.21.1.2

Melihat Pesan Teks Status Telemetri

Ikuti prosedur untuk melihat pesan teks status telemetri dari Kotak Masuk.

1 Tekan OK untuk mengakses menu.

2 Tekan ▲ atau ▼ ke `Pesan`. Tekan OK untuk memilih.

3 Tekan ▲ atau ▼ ke `Kotak Masuk`. Tekan OK untuk memilih.

4 Tekan ▲ atau ▼ ke pesan yang diperlukan.

Tekan OK untuk memilih.

Anda tidak dapat membalas pesan teks Status Telemetri.

Layar akan menampilkan `Telemetri: <Pesan Teks Status>`.

5 Tekan lama untuk kembali ke layar Awal.

4.10.21.1.3

Merespons Pesan Teks

Ketika Anda menerima pesan teks:

- Layar menampilkan daftar Notifikasi disertai alias atau ID pengirim.
- Layar menampilkan ikon **Pesan**.

PEMBERITAHUAN:
Radio keluar dari layar peringatan pesan teks dan menyiapkan Panggilan Pribadi atau Grup ke pengirim pesan jika tombol **PTT** ditekan.

1 Lakukan salah satu langkah berikut:

- Tekan ▲ atau ▼ ke `Baca`. Tekan OK untuk memilih.
  Layar menampilkan pesan teks. Layar menampilkan baris subjek jika pesan berasal dari aplikasi e-mail.

- Tekan ▲ atau ▼ ke `Baca Nanti`. Tekan OK untuk memilih.
  Radio kembali ke layar yang dibuka sebelum Anda menerima pesan teks.
- Tekan ▲ atau ▼ ke `Hapus`. Tekan OK untuk memilih.

2 Lakukan salah satu langkah berikut:

- Tekan OK untuk kembali ke Kotak Masuk.
- Tekan OK sekali lagi untuk membalas, meneruskan, atau menghapus pesan teks.

4.10.21.1.4

Merespons Pesan Teks dengan Teks Cepat

Ikuti prosedur untuk merespons pesan teks dengan pesan Teks Cepat di radio Anda.

1 Lakukan salah satu langkah berikut:

- Tekan tombol **Pesan Teks** terprogram. Lanjutkan ke Langkah 3.
- Tekan OK untuk mengakses menu.

2 Tekan ▲ atau ▼ ke `Pesan`. Tekan OK untuk memilih.

3 Tekan ▲ atau ▼ ke `Kotak Masuk`. Tekan OK untuk memilih.

4 Tekan ▲ atau ▼ ke pesan yang diperlukan.

Tekan OK untuk memilih.

Layar menampilkan baris subjek jika pesan berasal dari aplikasi e-mail.

5 Tekan OK untuk mengakses sub-menu.

6 Tekan ▲ atau ▼ ke `Balas`. Tekan OK untuk memilih.

7 Tekan ▲ atau ▼ ke `Balas Cepat`. Tekan OK untuk memilih.

8 Tekan ▲ atau ▼ ke pesan yang diperlukan.

Tekan OK untuk memilih.

Layar menampilkan pemberitahuan mini transisional, yang mengonfirmasi bahwa pesan sedang dikirim.

9 Tunggu respons.

Jika berhasil:

- Nada akan berbunyi.
- Layar menampilkan pemberitahuan mini positif.

Jika tidak berhasil:

- Nada akan berbunyi.
- Layar menampilkan pemberitahuan mini negatif.
- Radio kembali ke layar opsi `Kirim Ulang`.

4.10.21.1.5

Mengirim Ulang Pesan Teks

Ketika berada di layar opsi `Kirim Ulang`:

Tekan OK untuk mengirim ulang pesan yang sama ke alias atau ID subscriber atau grup yang sama.

Jika berhasil:

- Nada indikator positif akan berbunyi.
- Layar menampilkan pemberitahuan mini positif.

Jika tidak berhasil:

- Nada indikator negatif akan berbunyi.
- Layar menampilkan pemberitahuan mini negatif.
- Radio kembali ke layar opsi `Kirim Ulang`.

4.10.21.1.6

Meneruskan Pesan Teks

Ketika berada di layar opsi `Kirim Ulang`:

1 Tekan ▲ atau ▼ ke `Teruskan`, dan tekan OK untuk mengirim pesan yang sama ke alias atau ID subscriber atau grup.

2 Tekan ▲ atau ▼ ke alias atau ID yang diinginkan. Tekan OK untuk memilih.

Layar menampilkan pemberitahuan mini transisional, yang mengonfirmasi bahwa pesan sedang dikirim.

3 Tunggu respons.

Jika berhasil:

- Nada akan berbunyi.
- Layar menampilkan pemberitahuan mini positif.

Jika tidak berhasil:

- Nada akan berbunyi.
- Layar menampilkan pemberitahuan mini negatif.

PEMBERITAHUAN:
Anda juga dapat memilih alamat radio target secara manual (lihat Meneruskan Pesan Teks Menggunakan Panggilan Manual di halaman 471).

4.10.21.1.7

Meneruskan Pesan Teks Menggunakan Panggilan Manual

1 Tekan ▲ atau ▼ ke `Teruskan`. Tekan OK untuk memilih.

2 Tekan OK untuk mengirim pesan yang sama ke alias atau ID grup atau subscriber lain.

3 Tekan ▲ atau ▼ ke `Panggilan Manual`.

Tekan OK untuk memilih.

Layar menampilkan `Nomor Radio:`.

4 Masukkan ID subscriber, lalu tekan OK untuk melanjutkan.

Layar menampilkan pemberitahuan mini transisional, yang mengonfirmasi bahwa pesan sedang dikirim.

5 Tunggu respons.

Jika berhasil:

- Nada akan berbunyi.
- Layar menampilkan pemberitahuan mini positif.

Jika tidak berhasil:

- Nada akan berbunyi.
- Layar menampilkan pemberitahuan mini negatif.

4.10.21.1.8

Mengedit Pesan Teks

Pilih Edit untuk mengedit pesan.

PEMBERITAHUAN:
Jika terdapat baris subjek (untuk pesan yang diterima dari aplikasi email), Anda tidak dapat mengeditnya.

1 Tekan atau ke Edit. Tekan OK untuk memilih.

Layar menampilkan kursor berkedip.

2 Gunakan keypad untuk mengedit pesan.

- Tekan untuk bergerak satu spasi ke kiri.
- Tekan atau untuk bergerak satu spasi ke kanan.
- Tekan untuk menghapus karakter yang tidak diinginkan.
- Tekan lama untuk mengganti metode entri teks.

3 Tekan OK setelah selesai membuat pesan.

4 Lakukan salah satu langkah berikut:

- Tekan atau ke Kirim dan tekan OK untuk mengirim pesan.

- Tekan ▲ atau ▼ ke Simpan dan tekan OK untuk menyimpan pesan ke folder Konsep.
- Tekan untuk mengedit pesan.
- Tekan untuk memilih antara menghapus pesan atau menyimpannya di folder Konsep.

4.10.21.1.9

Menulis Pesan Teks

Ikuti prosedur untuk menulis pesan teks di radio Anda.

1 Lakukan salah satu langkah berikut:
- Tekan tombol **Pesan Teks** terprogram. Lanjutkan ke langkah 3.
- Tekan OK untuk mengakses menu.

2 Tekan ▲ atau ▼ ke Pesan. Tekan OK untuk memilih.

3 Tekan ▲ atau ▼ ke Tulis. Tekan OK untuk memilih.

Kursor berkedip akan ditampilkan.

4 Gunakan keypad untuk mengetik pesan.

Tekan ◀ untuk bergerak satu spasi ke kiri.

Tekan ▶ atau untuk bergerak satu spasi ke kanan.

Tekan untuk menghapus karakter yang tidak diinginkan.

Tekan lama untuk mengganti metode entri teks.

5 Tekan OK setelah selesai membuat pesan.

Lakukan salah satu langkah berikut:
- Tekan OK untuk mengirim pesan.

- Tekan . Tekan atau untuk memilih antara mengedit, menghapus, atau menyimpan pesan. Tekan OK untuk memilih.

4.10.21.1.10

Mengirim Pesan Teks

Dalam prosedur ini Anda dianggap memiliki pesan teks yang baru ditulis atau pesan teks tersimpan.

Pilih penerima pesan. Lakukan salah satu langkah berikut:

- Tekan atau ke alias atau ID yang diinginkan. Tekan OK untuk memilih.
- Tekan atau ke `Panggilan Manual`. Tekan OK untuk memilih.Masukkan ID subscriber. Baris pertama layar menampilkan `Nomor Radio:`. Baris kedua layar menampilkan kursor yang berkedip. Masukkan alias atau ID subscriber. Tekan OK.

Layar akan menampilkan pemberitahuan mini sementara, yang mengonfirmasi bahwa pesan Anda sedang dikirim.

Jika berhasil:

- Nada akan berbunyi.
- Layar menampilkan pemberitahuan mini positif.

Jika tidak berhasil:

- Nada rendah akan terdengar.
- Layar menampilkan pemberitahuan mini negatif.
- Pesan dipindah ke folder Item Terkirim.
- Pesan ditandai dengan ikon Gagal Terkirim.

PEMBERITAHUAN:
Untuk pesan teks yang baru ditulis, radio kembali ke layar opsi `Kirim Ulang`.

4.10.21.1.11

Menghapus Pesan Teks dari Kotak Masuk

Ikuti prosedur untuk menghapus pesan teks dari Kotak Masuk di radio Anda.

1 Lakukan salah satu langkah berikut:

- Tekan tombol **Pesan Teks** terprogram. Lanjutkan ke langkah 3.
- Tekan OK untuk mengakses menu.

2 Tekan ▲ atau ▼ ke `Pesan`. Tekan OK untuk memilih.

3 Tekan ▲ atau ▼ ke `Kotak Masuk`. Tekan OK untuk memilih.

Jika Kotak Masuk kosong:

- Layar menampilkan `Daftar Kosong`.
- Nada akan berbunyi.

4 Tekan ▲ atau ▼ ke pesan yang diperlukan.

Tekan OK untuk memilih.

Layar menampilkan baris subjek jika pesan berasal dari aplikasi e-mail.

5 Tekan OK untuk mengakses sub-menu.

6 Tekan ▲ atau ▼ ke `Hapus`. Tekan OK untuk memilih.

7 Tekan ▲ atau ▼ ke `Ya`. Tekan OK untuk memilih.

Layar menampilkan pemberitahuan mini positif. Layar kembali ke Kotak Masuk.

4.10.21.1.12

Menghapus Semua Pesan Teks dari Kotak Masuk

1 Lakukan salah satu langkah berikut:

- Tekan tombol **Pesan Teks** terprogram. Lanjutkan ke langkah 3.
- Tekan [OK] untuk mengakses menu.

2 Tekan [▲] atau [▼] ke `Pesan`. Tekan [OK] untuk memilih.

3 Tekan [▲] atau [▼] ke `Kotak Masuk`. Tekan [OK] untuk memilih.

Jika Kotak Masuk kosong:

- Layar menampilkan `Daftar Kosong`.
- Nada akan berbunyi.

4 Tekan [▲] atau [▼] ke `Hapus Semua`. Tekan [OK] untuk memilih.

5 Tekan [▲] atau [▼] ke `Ya`. Tekan [OK] untuk memilih.

Layar menampilkan pemberitahuan mini positif.

4.10.21.2

Pesan Teks Terkirim

Setelah terkirim ke radio lain, pesan akan disimpan di folder Item Terkirim. Pesan teks terkirim terbaru selalu ditambahkan ke bagian teratas di folder Item Terkirim. Anda dapat mengirim ulang, meneruskan, mengedit, atau menghapus pesan teks Terkirim.

Folder Item Terkirim mampu menyimpan maksimal 30 pesan terakhir yang terkirim. Ketika folder penuh, pesan teks terkirim berikutnya akan otomatis menggantikan pesan teks terlama di folder itu.

Jika Anda keluar dari layar pengiriman pesan teks ketika pesan sedang dikirimkan, radio memperbarui status pesan dalam folder Item Terkirim tanpa memberikan indikasi apa pun di layar atau melalui suara.

Jika radio berganti mode atau mati sebelum status pesan di Item Terkirim diperbarui, radio tidak akan dapat menyelesaikan pesan Dalam Proses apa pun dan otomatis menandainya dengan ikon **Gagal Terkirim**.

Radio mendukung maksimal lima pesan Sedang Berlangsung dalam satu waktu. Selama periode ini, radio tidak dapat mengirimkan pesan baru apa pun dan otomatis menandainya dengan ikon **Gagal Terkirim**.

Jika tombol ditekan lama kapan saja, radio kembali ke layar Awal.

PEMBERITAHUAN:
Jika jenis saluran, misalnya saluran digital konvensional atau Capacity Plus, tidak cocok, Anda hanya dapat mengedit, meneruskan, atau menghapus Pesan terkirim.

4.10.21.2.1

Melihat Pesan Teks Terkirim

1 Lakukan salah satu langkah berikut:
- Tekan tombol **Pesan Teks** terprogram. Lanjutkan ke langkah 3.
- Tekan OK untuk mengakses menu.

2 Tekan atau ke Pesan. Tekan OK untuk memilih.

3 Tekan atau ke Item Terkirim. Tekan OK untuk memilih.

Jika folder Item Terkirim kosong:
- Layar menampilkan Daftar Kosong.
- Nada rendah akan berbunyi jika Nada Keypad diaktifkan.

4 Tekan atau ke pesan yang diperlukan.

Tekan OK untuk memilih.

Ikon di sudut kanan atas layar menunjukkan status pesan. Lihat Ikon Item Terkirim.

4.10.21.2.2

Mengirim Pesan Teks Terkirim

Ketika Anda melihat pesan Terkirim:

1 Tekan OK .

2 Anda dapat mengirim ulang atau meneruskan pesan teks terkirim. Lakukan salah satu langkah berikut:
- ke Kirim Ulang. Tekan OK untuk memilih.

- ke Teruskan. Tekan OK untuk memilih.

Layar menampilkan pemberitahuan mini transisional, yang mengonfirmasi bahwa pesan sedang dikirim.

3 Tunggu respons.

Jika berhasil:

- Nada akan berbunyi.
- Layar menampilkan pemberitahuan mini positif.

Jika tidak berhasil:

- Nada akan berbunyi.
- Layar menampilkan pemberitahuan mini negatif.
- Radio masuk ke layar opsi Kirim Ulang. Lihat Mengirim Ulang Pesan Teks di halaman 168 untuk informasi selengkapnya.

4.10.21.2.3

Menghapus Pesan Teks Terkirim dari folder Item Terkirim

Ikuti prosedur untuk menghapus pesan teks terkirim dari folder Item Terkirim di radio Anda.

Ketika Anda melihat pesan Terkirim:

1 Tekan OK .

2 Tekan atau ke Hapus. Tekan OK untuk memilih.

4.10.21.2.4

Menghapus Semua Pesan Teks Terkirim dari folder Item Terkirim

Ikuti prosedur untuk menghapus semua pesan teks terkirim dari folder Item Terkirim di radio Anda.

1 Lakukan salah satu langkah berikut:

- Tekan tombol **Pesan Teks** terprogram. Lanjutkan ke langkah 3.
- Tekan OK untuk mengakses menu.

2 Tekan atau ke Pesan. Tekan OK untuk memilih.

3 Tekan ▲ atau ▼ ke `Item Terkirim`. Tekan OK untuk memilih.

Jika folder Item Terkirim kosong:

- Layar menampilkan `Daftar Kosong`.
- Nada akan berbunyi.

4 Tekan ▲ atau ▼ ke `Hapus Semua`. Tekan OK untuk memilih.

5 Lakukan salah satu langkah berikut:

- Tekan ▲ atau ▼ ke `Ya`. Tekan OK untuk memilih.
  Layar menampilkan pemberitahuan mini positif.
- Tekan ▲ atau ▼ ke `Tidak`. Tekan OK untuk memilih.
  Radio kembali ke layar sebelumnya.

4.10.21.3

Pesan SMS Tersimpan

Anda dapat menyimpan pesan SMS untuk mengirimkannya nanti.

Jika penekanan tombol **PTT** atau perubahan mode mengakibatkan radio keluar dari layar penulisan/pengeditan sewaktu Anda menulis atau mengedit pesan teks, maka pesan teks tersebut akan secara otomatis disimpan ke folder Konsep.

Pesan SMS yang paling baru disimpan selalu ditambahkan di bagian atas daftar Draf.

Folder Draf menyimpan maksimum 10 pesan terakhir yang disimpan. Saat folder penuh, pesan SMS yang berikutnya disimpan akan otomatis menggantikan pesan SMS terlama dalam folder.

4.10.21.3.1

Melihat Pesan Teks Tersimpan

1 Lakukan salah satu langkah berikut:

- Tekan tombol **Pesan Teks** terprogram. Lanjutkan ke langkah 3.
- Tekan OK untuk mengakses menu.

2 Tekan atau ke Pesan. Tekan OK untuk memilih.

3 Tekan atau ke Draf. Tekan OK untuk memilih.

4 Tekan atau ke pesan yang diperlukan.

Tekan OK untuk memilih.

4.10.21.3.2

Mengedit Pesan Teks Tersimpan

1 Tekan OK saat melihat pesan.

2 Tekan atau ke Edit. Tekan OK untuk memilih.

Kursor berkedip akan ditampilkan.

3 Gunakan keypad untuk mengetik pesan.

Tekan untuk bergerak satu spasi ke kiri.

Tekan atau untuk bergerak satu spasi ke kanan.

Tekan untuk menghapus karakter yang tidak diinginkan.

Tekan lama untuk mengganti metode entri teks.

4 Tekan OK setelah selesai membuat pesan.

Lakukan salah satu langkah berikut:

- Tekan atau ke Kirim. Tekan OK untuk mengirim pesan.
- Tekan . Tekan atau untuk memilih antara menyimpan atau menghapus pesan. Tekan OK untuk memilih.

4.10.21.3.3

Menghapus Pesan Teks Tersimpan dari Folder Konsep

1 Lakukan salah satu langkah berikut:

- Tekan tombol **Pesan Teks** terprogram. Lanjutkan ke langkah 3.
- Tekan OK untuk mengakses menu.

2 Tekan atau ke Pesan. Tekan OK untuk memilih.

3 Tekan atau ke Draf. Tekan OK untuk memilih.

4 Tekan atau ke pesan yang diperlukan.

Tekan OK untuk memilih.

5 Tekan atau ke Hapus. Tekan OK untuk menghapus pesan teks.

4.10.21.4

Pesan Teks Cepat

Radio Anda mendukung maksimal 50 pesan Teks Cepat sebagaimana diprogram oleh dealer.

Meskipun isi pesan Teks Cepat telah ditentukan sebelumnya, Anda dapat mengedit setiap pesan sebelum mengirimnya.

4.10.21.4.1

Mengirim Pesan Teks Cepat

Ikuti prosedur untuk mengirim pesan Teks Cepat yang sudah ditentukan sebelumnya di radio Anda ke alias yang sudah ditentukan sebelumnya.

1 Lakukan salah satu langkah berikut:

- Tekan tombol **Pesan Teks** terprogram. Lanjutkan ke langkah 3.
- Tekan tombol **Akses Satu Sentuhan** terprogram. Lanjutkan ke langkah 6.
  Layar menampilkan pemberitahuan mini transisional, yang mengonfirmasi bahwa pesan sedang dikirim.

- Tekan OK untuk mengakses menu.

2 Tekan ▲ atau ▼ ke Pesan. Tekan OK untuk memilih.

3 Tekan ▲ atau ▼ ke Teks Cepat. Tekan OK untuk memilih.

4 Tekan ▲ atau ▼ ke pesan Teks Cepat yang diperlukan. Tekan OK untuk memilih.

5 Lakukan hal berikut untuk memilih penerima dan mengirim pesan.

Layar menampilkan pemberitahuan mini transisional, yang mengonfirmasi bahwa pesan sedang dikirim.

6 Tunggu respons.

Jika berhasil:

- Nada indikator positif akan berbunyi.
- Layar menampilkan pemberitahuan mini positif.

Jika tidak berhasil:

- Nada indikator negatif akan berbunyi.
- Layar menampilkan pemberitahuan mini negatif.
- Radio masuk ke layar opsi Kirim Ulang. Lihat Mengirim Ulang Pesan Teks di halaman 168 untuk informasi selengkapnya.

4.10.22

Konfigurasi Entri Teks

Radio ini memungkinkan Anda mengonfigurasi teks yang berbeda.

Anda dapat mengonfigurasi pengaturan berikut untuk memasukkan teks di radio Anda:

- Prediksi Kata
- Koreksi Kata
- Kapitalisasi Kalimat
- Kata Saya

Radio Anda mendukung metode entri teks berikut:

- Angka
- Simbol
- Prediktif atau Multisentuh

- Bahasa (Jika diprogram)

PEMBERITAHUAN:

Tekan kapan saja untuk kembali ke layar sebelumnya atau tekan lama untuk kembali ke Layar Awal. Radio keluar dari layar saat ini setelah pencatat waktu nonaktif berakhir.

4.10.22.1

Mengaktifkan atau Menonaktifkan Koreksi Kata

Menyediakan pilihan kata alternatif saat kata yang dimasukkan ke dalam editor teks tidak dikenali oleh kamus yang ada di dalamnya.

1. Tekan OK untuk mengakses menu.
2. Tekan atau ke Utilitas. Tekan OK untuk memilih.
3. Tekan atau ke Pengaturan Radio. Tekan OK untuk memilih.
4. Tekan atau ke Entri Teks. Tekan OK untuk memilih.
5. Tekan atau ke Koreksi Kata. Tekan OK untuk memilih.
6. Lakukan salah satu langkah berikut:
   - Tekan atau ke Koreksi Kata. Tekan OK untuk memilih.
   - Tekan untuk mengaktifkan Koreksi Kata. Jika diaktifkan, ✓ muncul di sebelah Diaktifkan.
   - Tekan untuk menonaktifkan Koreksi Kata. Jika dinonaktifkan, ✓ hilang dari sebelah Diaktifkan.

4.10.22.2

Mengaktifkan atau Menonaktifkan Prediksi Kata

Prediksi Kata: Radio Anda bisa mempelajari urutan kata umum yang sering Anda masukkan. Kemudian memprediksi kata berikutnya yang mungkin ingin Anda

gunakan setelah memasukkan kata pertama dari urutan kata umum ke dalam editor teks.

1 Tekan OK untuk mengakses menu.

2 Tekan ▲ atau ▼ ke Utilitas. Tekan OK untuk memilih.

3 Tekan ▲ atau ▼ ke Pengaturan Radio. Tekan OK untuk memilih.

4 Tekan ▲ atau ▼ ke Entri Teks. Tekan OK untuk memilih.

5 Tekan ▲ atau ▼ ke Prediksi Kata. Tekan OK untuk memilih.

6 Lakukan salah satu langkah berikut:

- Tekan OK untuk mengaktifkan Prediksi Kata. Jika diaktifkan, ✔ muncul di sebelah Diaktifkan.
- Tekan OK untuk menonaktifkan Kontrol Distorsi Dinamis Mikrofon. Jika dinonaktifkan, ✔ hilang dari sebelah Diaktifkan.

4.10.22.3

Kapitalisasi Kalimat

Fitur ini digunakan untuk mengaktifkan kapitalisasi secara otomatis untuk huruf awal kata pertama pada setiap kalimat baru.

1 Tekan OK untuk mengakses menu.

2 Tekan ▲ atau ▼ ke Utilitas. Tekan OK untuk memilih.

3 Tekan ▲ atau ▼ ke Pengaturan Radio. Tekan OK untuk memilih.

4 Tekan ▲ atau ▼ ke Entri Teks. Tekan OK untuk memilih.

5 Tekan ▲ atau ▼ ke `Kapitalisasi Kalimat`. Tekan OK untuk memilih.

6 Lakukan salah satu langkah berikut:

- Tekan OK untuk mengaktifkan Kapitalisasi Kalimat. Jika diaktifkan, ✓ muncul di sebelah `Diaktifkan`.
- Tekan OK untuk menonaktifkan Kapitalisasi Kalimat. Jika dinonaktifkan, ✓ hilang dari sebelah `Diaktifkan`.

4.10.22.4

Melihat Kata Khusus

Anda dapat menambahkan kata khusus sendiri ke kamus internal di radio. Radio Anda menyimpan daftar yang berisi kata ini.

1 Tekan OK untuk mengakses menu.

2 Tekan ▲ atau ▼ ke `Utilitas`. Tekan OK untuk memilih.

3 Tekan ▲ atau ▼ ke `Pengaturan Radio`. Tekan OK untuk memilih.

4 Tekan ▲ atau ▼ ke `Entri Teks`. Tekan OK untuk memilih.

5 Tekan ▲ atau ▼ ke `Kata-Kata Saya`. Tekan OK untuk memilih.

6 Tekan ▲ atau ▼ ke `Daftar Kata`. Tekan OK untuk memilih.

Layar akan menampilkan daftar kata khusus tersebut.

4.10.22.5

Mengedit Kata Khusus

Anda bisa mengedit kata khusus yang disimpan di radio Anda.

1 Tekan OK untuk mengakses menu.

2 Tekan atau ke Utilitas. Tekan OK untuk memilih.

3 Tekan atau ke Pengaturan Radio.

Tekan OK untuk memilih.

4 Tekan atau ke Entri Teks. Tekan OK untuk memilih.

5 Tekan atau ke Kata-Kata Saya. Tekan OK untuk memilih.

6 Tekan atau ke Daftar Kata. Tekan OK untuk memilih.

Layar akan menampilkan daftar kata khusus tersebut.

7 Tekan atau ke kata yang diinginkan.

Tekan OK untuk memilih.

8 Tekan atau ke Edit. Tekan OK untuk memilih.

9 Gunakan keypad untuk mengedit kata khusus Anda.

- Tekan untuk bergerak satu spasi ke kiri.
- Tekan tombol untuk bergerak satu spasi ke kanan.
- Tekan untuk menghapus karakter yang tidak diinginkan.

- Tekan lama untuk mengganti metode entri teks.

10 Tekan setelah kata khusus Anda selesai.

Layar menampilkan pemberitahuan mini transisional, yang mengonfirmasikan bahwa pembaruan status Anda sedang disimpan.

- Jika kata khusus disimpan, sebuah nada akan berbunyi dan layar menampilkan pemberitahuan mini positif.
- Jika kata khusus tidak disimpan, sebuah nada rendah akan berbunyi dan layar menampilkan pemberitahuan mini negatif.

4.10.22.6

Menambahkan Kata Khusus

Anda dapat menambahkan kata khusus ke kamus internal radio.

1 Tekan untuk mengakses menu.

2 Tekan atau ke `Utilitas`. Tekan untuk memilih.

3 Tekan atau ke `Pengaturan Radio`.

Tekan untuk memilih.

4 Tekan atau ke `Entri Teks`. Tekan untuk memilih.

5 Tekan atau ke `Kata-Kata Saya`. Tekan untuk memilih.

6 Tekan atau ke `Tambah Kata Baru`.

Tekan untuk memilih.

Layar akan menampilkan daftar kata khusus tersebut.

7 Gunakan keypad untuk mengedit kata khusus Anda.

- Tekan untuk bergerak satu spasi ke kiri.

- Tekan tombol ▶ untuk bergerak satu spasi ke kanan.
- Tekan untuk menghapus karakter yang tidak diinginkan.
- Tekan lama untuk mengganti metode entri teks.

8 Tekan OK setelah kata khusus Anda selesai.

Layar menampilkan pemberitahuan mini transisional, yang mengonfirmasikan bahwa pembaruan status Anda sedang disimpan.

- Jika kata khusus disimpan, sebuah nada akan berbunyi dan layar menampilkan pemberitahuan mini positif.
- Jika kata khusus tidak disimpan, sebuah nada rendah akan berbunyi dan layar menampilkan pemberitahuan mini negatif.

4.10.22.7

Menghapus Kata Khusus

Anda bisa menghapus kata khusus yang disimpan di radio Anda.

1 Tekan OK untuk mengakses menu.

2 Tekan atau ke `Utilitas`. Tekan OK untuk memilih.

3 Tekan atau ke `Pengaturan Radio`. Tekan OK untuk memilih.

4 Tekan atau ke `Entri Teks`. Tekan OK untuk memilih.

5 Tekan atau ke `Kata-Kata Saya`. Tekan OK untuk memilih.

6 Tekan atau ke kata yang diinginkan. Tekan OK untuk memilih.

7 Tekan atau ke `Hapus`. Tekan OK untuk memilih.

8 Lakukan salah satu hal berikut.

- Pada Hapus Entri?, tekan OK untuk memilih Ya. Layar menampilkan Entri Dihapus.
- Tekan atau ke Tidak. Tekan OK untuk kembali ke layar sebelumnya.

4.10.22.8

Menghapus Semua Kata Khusus

Anda dapat menghapus semua kata khusus dari kamus internal di radio Anda.

1 Tekan OK untuk mengakses menu.

2 Tekan atau ke Utilitas. Tekan OK untuk memilih.

3 Tekan atau ke Pengaturan Radio. Tekan OK untuk memilih.

4 Tekan atau ke Entri Teks. Tekan OK untuk memilih.

5 Tekan atau ke Kata-Kata Saya. Tekan OK untuk memilih.

6 Tekan atau ke Hapus Semua. Tekan OK untuk memilih.

7 Lakukan salah satu langkah berikut:

- Pada Hapus Entri?, tekan OK untuk memilih Ya. Layar menampilkan Semua Entri Dihapus.
- Tekan atau ke Tidak untuk kembali ke layar sebelumnya. Tekan OK untuk memilih.

4.10.23

Tiket Tugas

Fitur ini memungkinkan radio Anda menerima pesan dari dispatcher berisi daftar tugas yang harus dijalankan.

PEMBERITAHUAN:
Fitur ini dapat disesuaikan melalui Customer Programming Software (CPS) sesuai dengan persyaratan pengguna. Tanyakan kepada dealer atau administrator sistem Anda untuk informasi selengkapnya.

Ada dua folder yang berisi Tiket Tugas yang berbeda:

Folder Tugas Saya
Tiket Tugas yang dapat dipersonalisasikan ditugaskan ke ID pengguna yang Anda masuki.

Folder Tugas yang Dibagikan
Tiket Tugas yang dibagikan ditetapkan ke grup atau individu.

Anda dapat merespons Tiket Tugas untuk menyortirnya ke dalam Folder Tiket Tugas. Secara default, foldernya adalah **Semua**, **Baru**, **Dimulai**, dan **Selesai**. Untuk 10 folder tambahan, hubungi dealer atau administrator sistem Anda.

Tiket Tugas akan disimpan meskipun radio dimatikan dan dihidupkan kembali.

Semua Tiket Tugas berada di folder **Semua**. Tergantung bagaimana radio Anda diprogram, Tiket Tugas disortir berdasarkan tingkat prioritas yang diikuti dengan waktu penerimaan. Tiket Tugas Baru, yaitu Tiket Tugas dengan status perubahan terbaru, dan Tiket Tugas dengan prioritas tertinggi dicantumkan terlebih dulu.

Setelah mencapai jumlah maksimum, Tiket Tugas berikutnya akan secara otomatis menggantikan Tiket Tugas terakhir yang ada di radio. Radio Anda mendukung maksimum 100 atau 500 Tiket Tugas, tergantung pada model radio. Tanyakan kepada dealer atau administrator sistem Anda untuk informasi selengkapnya. Radio Anda secara otomatis mendeteksi dan membuang Tiket Tugas duplikat dengan ID Tiket Tugas yang sama.

Tergantung pada pentingnya Tiket Tugas, dispatcher menambahkan Tingkat Prioritas ke dalamnya. Ada tiga tingkat prioritas: Prioritas 1, Prioritas 2, dan Prioritas 3. Prioritas 1 memiliki prioritas tertinggi dan Prioritas 3 adalah yang terendah. Selain itu ada Tiket Tugas tanpa prioritas.

Radio Anda memperbarui saat dispatcher melakukan perubahan berikut ini:

- Memodifikasi konten Tiket Tugas.
- Menambahkan atau mengedit Tingkat Prioritas Tiket Tugas.

- Memindahkan Tiket Tugas dari folder ke folder.
- Membatalkan Tiket Tugas.

4.10.23.1

Mengakses Folder Tiket Tugas

Ikuti prosedur untuk mengakses folder Tiket Tugas.

1 Lakukan salah satu langkah berikut:
   - Tekan tombol **Tiket Tugas** terprogram. Lanjutkan ke langkah 3.
   - Tekan OK untuk mengakses menu.

2 Tekan ▲ atau ▼ ke `Tiket Tugas`. Tekan OK untuk memilih.

3 Tekan ▲ atau ▼ ke folder yang diinginkan. Tekan OK untuk memilih.

4 Tekan ▲ atau ▼ ke Tiket Tugas yang diinginkan. Tekan OK untuk memilih.

4.10.23.2

Masuk atau Keluar dari Server Jauh

Fitur ini memungkinkan Anda masuk dan keluar dari server jauh menggunakan ID pengguna.

1 Tekan OK untuk mengakses menu.

2 Tekan ▲ atau ▼ ke `Masuk`. Tekan OK untuk memilih.

   Jika Anda sudah masuk, menu menampilkan `Keluar`.

   Layar menampilkan pemberitahuan mini transisional, yang menunjukkan permintaan sedang diproses.

3 Tunggu respons.

   Jika berhasil:
   - Nada indikator positif akan berbunyi.

- Layar menampilkan pemberitahuan mini positif.

Jika tidak berhasil:

- Nada indikator negatif akan berbunyi.
- Layar menampilkan pemberitahuan mini negatif.

4.10.23.3

Membuat Tiket Tugas

Radio mempunyai kemampuan untuk membuat Tiket Tugas berdasarkan template Tiket Tugas dan mengirim tugas yang harus dilakukan.

Perangkat lunak pemrograman CPS diperlukan untuk mengonfigurasi template Tiket Tugas.

1 Tekan OK untuk mengakses menu.

2 Tekan ▲ atau ▼ ke `Tiket Tugas`. Tekan OK untuk memilih.

3 Tekan ▲ atau ▼ ke `Buat Tiket`. Tekan OK untuk memilih.

4.10.23.4

Merespons Tiket Tugas

Ikuti prosedur untuk merespons tiket tugas di radio Anda.

1 Tekan OK untuk mengakses menu.

2 Tekan ▲ atau ▼ ke `Tiket Tugas`. Tekan OK untuk memilih.

3 Tekan ▲ atau ▼ ke folder yang diinginkan. Tekan OK untuk memilih.

4 Tekan ▲ atau ▼ ke tiket tugas yang diinginkan. Tekan OK untuk memilih.

5 Tekan OK sekali lagi untuk mengakses submenu.

Anda dapat juga menekan tombol angka yang terkait (1-9) untuk **Balas Cepat**.

6 Tekan ▲ atau ▼ ke tiket tugas yang diinginkan. Tekan OK untuk memilih.

Layar menampilkan pemberitahuan mini transisional, yang menunjukkan permintaan sedang diproses.

7 Tunggu respons.

Jika berhasil:

- Nada indikator positif akan berbunyi.
- Layar menampilkan pemberitahuan mini positif.

Jika tidak berhasil:

- Nada indikator negatif akan berbunyi.
- Layar menampilkan pemberitahuan mini negatif.

4.10.23.5

Mengirim Tiket Tugas Menggunakan Satu Template Tiket Tugas

Jika radio Anda dikonfigurasi dengan satu template Tiket Tugas, lakukan tindakan berikut untuk mengirim Tiket Tugas.

1 Gunakan keypad untuk mengetik nomor ruang yang diinginkan. Tekan OK untuk memilih.

2 Tekan ▲ atau ▼ ke `Status Ruang`. Tekan OK untuk memilih.

3 Tekan ▲ atau ▼ ke opsi yang diinginkan. Tekan OK untuk memilih.

4 Tekan ▲ atau ▼ ke `Kirim`. Tekan OK untuk memilih.

Layar menampilkan pemberitahuan mini transisional, yang menunjukkan permintaan sedang diproses.

5 Tunggu respons.

Jika berhasil:

- Nada indikator positif akan berbunyi.
- Layar menampilkan pemberitahuan mini positif.

Jika tidak berhasil:

- Nada indikator negatif akan berbunyi.

- Layar menampilkan pemberitahuan mini negatif.

4.10.23.6

Mengirim Tiket Tugas Menggunakan Lebih Dari Satu Template Tiket Tugas

Jika radio Anda dikonfigurasi dengan lebih dari satu template Tiket Tugas, lakukan tindakan berikut untuk mengirim Tiket Tugas.

1 Tekan ▲ atau ▼ ke opsi yang diinginkan.

Tekan OK untuk memilih.

2 Tekan ▲ atau ▼ ke `Kirim`. Tekan OK untuk memilih.

Layar menampilkan pemberitahuan mini transisional, yang menunjukkan permintaan sedang diproses.

3 Tunggu respons.

Jika berhasil:

- Nada indikator positif akan berbunyi.
- Layar menampilkan pemberitahuan mini positif.

Jika tidak berhasil:

- Nada indikator negatif akan berbunyi.
- Layar menampilkan pemberitahuan mini negatif.

4.10.23.7

Menghapus Tiket Tugas

Ikuti prosedur untuk menghapus tiket tugas di radio Anda.

1 Lakukan salah satu langkah berikut:

- Tekan tombol **Tiket Tugas** terprogram. Lanjutkan ke langkah 4
- Tekan OK untuk mengakses menu.

2 Tekan ▲ atau ▼ ke `Tiket Tugas`. Tekan OK untuk memilih.

3 Tekan ▲ atau ▼ ke folder yang diinginkan.

Tekan OK untuk memilih.

4 Tekan ▲ atau ▼ ke Semua folder. Tekan OK untuk memilih.

5 Tekan ▲ atau ▼ ke Tiket Tugas yang diinginkan. Tekan OK untuk memilih.

6 Tekan OK lagi sewaktu menampilkan Tiket Tugas.

7 Tekan ▲ atau ▼ ke Hapus. Tekan OK untuk memilih.

Layar menampilkan pemberitahuan mini transisional, yang menunjukkan permintaan sedang diproses.

8 Tunggu respons.

Jika berhasil:

- Nada indikator positif akan berbunyi.
- Layar menampilkan pemberitahuan mini positif.

Jika tidak berhasil:

- Nada indikator negatif akan berbunyi.
- Layar menampilkan pemberitahuan mini negatif.

4.10.23.8

Menghapus Semua Tiket Tugas

Ikuti prosedur untuk menghapus semua tiket tugas di radio Anda.

1 Lakukan salah satu langkah berikut:

- Tekan tombol **Tiket Tugas** terprogram. Lanjutkan ke langkah 3.
- Tekan OK untuk mengakses menu.

2 Tekan ▲ atau ▼ ke Tiket Tugas. Tekan OK untuk memilih.

3 Tekan ▲ atau ▼ ke folder yang diinginkan. Tekan OK untuk memilih.

4 Tekan ▲ atau ▼ ke `Semua` folder. Tekan OK untuk memilih.

5 Tekan ▲ atau ▼ ke `Hapus Semua`. Tekan OK untuk memilih.

6 Lakukan salah satu langkah berikut:

- Tekan ▲ atau ▼ ke `Ya`. Tekan OK untuk memilih.
  Layar menampilkan pemberitahuan mini positif.
- Tekan ▲ atau ▼ ke `Tidak`. Tekan OK untuk memilih.
  Radio kembali ke layar sebelumnya.

4.10.24

Privasi

Fitur ini membantu mencegah pengguna yang tidak sah menguping di saluran menggunakan solusi pengacakan berbasis perangkat lunak. Transmisi pengiriman sinyal dan identifikasi pengguna tidak diacak.

Privasi pada radio Anda harus diaktifkan pada saluran tersebut untuk mengirim transmisi dengan privasi diaktifkan, meskipun ini bukan persyaratan yang perlu untuk menerima transmisi. Ketika berada pada saluran dengan privasi diaktifkan, radio masih bisa menerima transmisi yang jernih atau tanpa diacak.

Radio Anda hanya mendukung Privasi yang Disempurnakan. Untuk menguraikan transmisi data atau panggilan dengan privasi diaktifkan, radio Anda harus diprogram agar mempunyai Nilai Kunci dan ID Kunci untuk Privasi yang Disempurnakan yang sama dengan radio yang mengirim transmisi.

Jika radio Anda menerima panggilan diacak yang mempunyai Nilai Kunci dan ID Kunci yang berbeda, Anda tidak akan mendengar apa pun untuk Privasi yang Disempurnakan.

Pada saluran yang mengaktifkan privasi, radio dapat menerima panggilan jernih atau tanpa diacak, tergantung pemrograman radio Anda. Selain itu, radio mungkin memutar nada peringatan atau tidak, tergantung pemrogramannya.

PEMBERITAHUAN:
Fitur ini tidak tersedia dalam saluran Citizens Band yang berada dalam frekuensi yang sama.

LED hijau akan menyala saat radio melakukan transmisi dan akan berkedip dengan cepat saat radio menerima transmisi yang berlangsung dengan privasi diaktifkan.

PEMBERITAHUAN:
Model radio tertentu belum tentu mempunyai fitur Privasi ini, atau mempunyai konfigurasi berbeda. Tanyakan kepada dealer atau administrator sistem Anda untuk informasi selengkapnya.

4.10.24.1

Mengaktifkan atau Menonaktifkan Privasi

Ikuti prosedur untuk mengaktifkan atau menonaktifkan privasi di radio Anda.

1 Lakukan salah satu langkah berikut:
- Tekan tombol terprogram **Privasi**. Lompati langkah-langkah di bawah ini.
- Tekan OK untuk mengakses menu.

2 Tekan atau ke Utilitas. Tekan OK untuk memilih.

3 Tekan atau ke Pengaturan Radio. Tekan OK untuk memilih.

4 Tekan atau ke Privasi. Tekan OK untuk memilih.

5 Lakukan salah satu langkah berikut:
- Tekan atau ke Aktif. Tekan OK untuk memilih. Layar menampilkan ✓ di sebelah Aktif.
- Tekan atau ke Nonaktif. Tekan OK untuk memilih. Layar menampilkan ✓ di sebelah Nonaktif.

4.10.25

Larangan Tanggapan

Fitur ini mencegah radio menanggapi transmisi masuk.

PEMBERITAHUAN:
Hubungi dealer Anda untuk mengetahui bagaimana radio Anda diprogram.

Jika aktif, radio tidak menghasilkan transmisi keluar untuk menanggapi transmisi masuk, seperti Pemeriksaan Radio, Peringatan Panggilan, Penonaktifan Radio, Monitor Jarak Jauh, Layanan Pendaftaran Otomatis (ARS), Penanggapan Pesan Pribadi, dan Pengiriman laporan lokasi GNSS.

Saat fitur ini aktif, radio tidak dapat menerima Panggilan Pribadi yang Dikonfirmasi. Namun, radio dapat mengirim transmisi secara manual.

4.10.25.1
Menonaktifkan atau Menonaktifkan Larangan Tanggapan

Ikuti prosedur untuk mengaktifkan atau menonaktifkan Larangan Tanggapan di radio.

Tekan tombol terprogram **Larangan Tanggapan**.

Jika berhasil:

- Nada indikator positif akan berbunyi.
- Layar menampilkan pemberitahuan mini positif.

Jika tidak berhasil:

- Nada indikator negatif akan berbunyi.
- Layar menampilkan pemberitahuan mini negatif.

4.10.26
Stun/Revive

Fitur ini memungkinkan Anda mengaktifkan atau menonaktifkan radio di dalam sistem. Misalnya, penyalur atau administrator sistem ingin menonaktifkan radio yang dicuri agar pengguna yang tidak sah tidak dapat menggunakannya, dan mengaktifkan radio tersebut ketika sudah ditemukan.

Radio dapat dinonaktifkan (stun) atau diaktifkan (revive) melalui konsol atau perintah dari radio lain.

Setelah dinonaktifkan, radio akan mengeluarkan nada indikator negatif dan layar utamanya menampilkan `Saluran Ditolak.`

Ketika dimatikan sementara, radio tidak dapat meminta atau menerima layanan yang dimulai pengguna pada sistem yang melakukan prosedur Mati Sementara. Namun, radio dapat beralih ke sistem lain. Radio terus mengirim laporan lokasi GNSS dan dapat dipantau dari jauh ketika dimatikan sementara.

PEMBERITAHUAN:
Penyalur atau administrator sistem dapat menonaktifkan radio secara permanen. Lihat Radio Kill di halaman 201 untuk informasi selengkapnya.

4.10.26.1

Mengaktifkan Radio

Ikuti prosedur untuk menonaktifkan radio.

1 Tekan tombol **Penonaktifan Radio** terprogram.

2 Tekan ▲ atau ▼ ke alias atau ID yang diinginkan. Tekan OK untuk memilih.

Layar menampilkan pemberitahuan mini transisional, yang menunjukkan permintaan sedang diproses. LED akan berkedip hijau.

3 Tunggu respons.

Jika berhasil:

- Nada indikator positif akan berbunyi.
- Layar menampilkan pemberitahuan mini positif.

Jika tidak berhasil:

- Nada indikator negatif akan berbunyi.
- Layar menampilkan pemberitahuan mini negatif.

4.10.26.2

Menonaktifkan Sementara Radio Menggunakan Daftar Kontak

Ikuti prosedur untuk menonaktifkan radio menggunakan Daftar Kontak.

1 Tekan OK untuk mengakses menu.

2 Tekan ▲ atau ▼ ke `Kontak`.Tekan OK untuk memilih.

3 Tekan ▲ atau ▼ ke alias atau ID yang diinginkan.Tekan OK untuk memilih.

4 Tekan ▲ atau ▼ ke `Penonaktifan Radio`. Tekan OK untuk memilih.

Layar menampilkan pemberitahuan mini transisional, yang menunjukkan permintaan sedang diproses. LED akan berkedip hijau.

5 Tunggu respons.

Jika berhasil:

- Nada indikator positif akan berbunyi.
- Layar menampilkan pemberitahuan mini positif.

Jika tidak berhasil:

- Nada indikator negatif akan berbunyi.
- Layar menampilkan pemberitahuan mini negatif.

4.10.26.3

Menonaktifkan Radio Menggunakan Panggilan Manual

Ikuti prosedur untuk menonaktifkan radio menggunakan panggilan manual.

1 Tekan OK untuk mengakses menu.

2 Tekan ▲ atau ▼ ke Kontak. Tekan OK untuk memilih.

3 Tekan ▲ atau ▼ ke Panggilan Manual.

Tekan OK untuk memilih.

4 Tekan ▲ atau ▼ ke Nomor Radio. Tekan OK untuk memilih.

Baris teks pertama menampilkan Nomor Radio:.

5 Masukkan ID subscriber, lalu tekan OK untuk melanjutkan.

6 Tekan ▲ atau ▼ ke Penonaktifan Radio.

Tekan OK untuk memilih.

Layar menampilkan pemberitahuan mini transisional, yang menunjukkan permintaan sedang diproses. LED akan berkedip hijau.

7 Tunggu respons.

Jika berhasil:

- Nada indikator positif akan berbunyi.

- Layar menampilkan pemberitahuan mini positif.

Jika tidak berhasil:

- Nada indikator negatif akan berbunyi.
- Layar menampilkan pemberitahuan mini negatif.

4.10.26.4

Mengaktifkan Radio

Ikuti prosedur untuk mengaktifkan radio.

1 Tekan tombol **Pengaktifan Radio** yang terprogram.

2 Tekan ▲ atau ▼ ke alias atau ID yang diinginkan. Tekan OK untuk memilih.

Layar menampilkan `Pengaktifan Radio` dan alias atau ID subscriber. LED hijau akan menyala.

3 Tunggu respons.

Jika berhasil:

- Nada indikator positif akan berbunyi.
- Layar menampilkan pemberitahuan mini positif.

Jika tidak berhasil:

- Nada indikator negatif akan berbunyi.
- Layar menampilkan pemberitahuan mini negatif.

4.10.26.5

Mengaktifkan Radio Menggunakan Daftar Kontak

Ikuti prosedur untuk mengaktifkan radio menggunakan Daftar Kontak.

1 Tekan OK untuk mengakses menu.

2 Tekan ▲ atau ▼ ke `Kontak`. Tekan OK untuk memilih.

3 Tekan ▲ atau ▼ ke alias atau ID yang diinginkan. Tekan OK untuk memilih.

4 Tekan ▲ atau ▼ ke `Pengaktifan Radio`.

Tekan OK untuk memilih.

LED akan berkedip hijau.
Layar menampilkan `Pengaktifan Radio` dan alias atau ID subscriber. LED hijau akan menyala.

5 Tunggu respons.

Jika berhasil:

- Nada akan berbunyi.
- Layar menampilkan `Pengaktifan Radio Berhasil`.

Jika tidak berhasil:

- Nada akan berbunyi.
- Layar menampilkan `Pengaktifan Radio Gagal`.

4.10.26.6

Mengaktifkan Radio Menggunakan Panggilan Manual

Ikuti prosedur untuk mengaktifkan radio menggunakan Panggilan Manual.

1 Tekan OK untuk mengakses menu.

2 Tekan ▲ atau ▼ ke `Kontak`. Tekan OK untuk memilih.

3 Tekan ▲ atau ▼ ke `Panggilan Manual`.

Tekan OK untuk memilih.

4 Tekan ▲ atau ▼ ke `Panggilan Pribadi`.

Tekan OK untuk memilih.

Baris teks pertama menampilkan `Nomor Radio:`.

5 Masukkan ID subscriber, lalu tekan OK untuk melanjutkan.

6 Tekan ▲ atau ▼ ke `Pengaktifan Radio`.

Tekan OK untuk memilih.

LED akan berkedip hijau.
Layar menampilkan `Pengaktifan Radio` dan alias atau ID subscriber. LED hijau akan menyala.

7 Tunggu respons.

Jika berhasil:

- Nada akan berbunyi.
- Layar menampilkan `Pengaktifan Radio Berhasil`.

Jika tidak berhasil:

- Nada akan berbunyi.
- Layar menampilkan `Pengaktifan Radio Gagal`.

4.10.27

Radio Kill

Fitur ini meningkatkan keamanan yang melarang akses radio tanpa otorisasi.

Radio Kill menyebabkan radio dirender hingga tidak dapat dioperasikan. Misalnya, penyalur ingin menonaktifkan radio yang dicuri atau hilang untuk mencegah penggunaan tanpa otorisasi.

Saat dihidupkan, radio nonaktif menampilkan `Radio Killed` sesaat di layar yang menunjukkan status nonaktif.

PEMBERITAHUAN:
Radio nonaktif hanya dapat dipulihkan di toko layanan Motorola Solutions. Untuk informasi lebih lanjut, hubungi dealer Anda.

4.10.28

Pekerja Terpisah

Fitur ini memicu keadaan darurat yang akan diangkat jika tidak ada aktivitas pengguna, seperti penekanan tombol radio atau aktivasi pemilihan saluran, selama waktu yang ditentukan sebelumnya.

Setelah tidak ada aktivitas pengguna selama durasi terprogram, radio sebelumnya mengingatkan pengguna melalui indikator audio setelah pengatur waktu nonaktif habis.

Jika tetap tidak ada respons dari Anda sebelum pengatur waktu pengingat yang ditetapkan sebelumnya habis, radio

menginisiasi kondisi darurat sebagaimana diprogram oleh penyalur atau administrator sistem.

4.10.29

Kunci Kata Sandi

Anda dapat mengatur kata sandi untuk membatasi akses ke radio. Setiap kali Anda menyalakan radio, Anda diminta untuk memasukkan kata sandi.

Radio Anda mendukung input kata sandi 4-digit.

Anda juga dapat menggunakan mikrofon keypad untuk memasukkan kata sandi.

Radio Anda tidak dapat menerima panggilan dalam status terkunci.

4.10.29.1

Mengakses Radio Menggunakan Kata Sandi

Nyalakan radio Anda.

1 Masukkan kata sandi empat digit.

a Gunakan mikrofon keypad.

b Untuk mengedit nilai numerik tiap digit, tekan ▲ atau ▼. Untuk memasukkan dan berpindah ke digit selanjutnya, tekan OK.

PEMBERITAHUAN:
Penggunaan sakelar kaki **Darurat** akan membatalkan masukan kata sandi untuk mengakses radio.

2 Tekan OK untuk mengonfirmasi kata sandi.

Jika Anda memasukkan kata sandi dengan benar, radio akan menyala.

Jika Anda memasukkan kata sandi yang salah setelah percobaan pertama dan kedua, radio akan menampilkan indikasi sebagai berikut:

- Nada tak terputus akan berbunyi.
- Layar menampilkan `Kata Sandi Salah`.

Ulangi langkah 1.

Jika Anda memasukkan kata sandi yang salah setelah percobaan ketiga, radio akan menampilkan indikasi berikut:

- Nada akan berbunyi.
- LED kuning berkedip ganda.

- Layar menampilkan `Kata sandi Salah` lalu, `Radio Terkunci`.
- Radio masuk ke status terkunci selama 15 menit.

PEMBERITAHUAN:
Dalam keadaan terkunci, radio merespons masukan dari **Kenop Aktif/Nonaktif/Kontrol Volume** dan tombol **Lampu Latar** terprogram saja.

Tunggu selama 15 menit hingga pengatur waktu status penguncian berakhir, lalu ulangi langkah 1.

PEMBERITAHUAN:
Jika Anda mematikan dan menyalakan lagi radio, pengatur waktu 15 menit akan dimulai ulang.

4.10.29.2

Membuka Kunci Radio dalam Status Terkunci

Radio Anda tidak dapat menerima panggilan dalam status terkunci. Ikuti prosedur untuk membuka kunci radio dalam status terkunci.

Lakukan salah satu langkah berikut:

- Jika radio dihidupkan, tunggu hingga 15 menit, lalu ulangi langkah-langkah tersebut dalam Mengakses Radio Menggunakan Kata Sandi di halaman 202 untuk mengakses radio.
- Jika radio dimatikan, nyalakan radio. Radio memulai ulang pencatat waktu 15 menit untuk status terkunci. Nada akan berbunyi. LED kuning berkedip ganda. Layar menampilkan `Radio Terkunci`.

  Tunggu selama 15 menit, lalu ulangi langkah-langkah tersebut dalam Mengakses Radio Menggunakan Kata Sandi di halaman 202 untuk mengakses radio.

4.10.29.3

Mengaktifkan atau Menonaktifkan Kunci Kata Sandi

Ikuti prosedur untuk mengaktifkan atau menonaktifkan kunci kata sandi di radio Anda.

1. Tekan OK untuk mengakses menu.
2. Tekan ▲ atau ▼ ke `Utilitas`. Tekan OK untuk memilih.

3 Tekan ▲ atau ▼ ke Pengaturan Radio.

Tekan OK untuk memilih.

4 Tekan ▲ atau ▼ ke Kunci Kata Sandi.

Tekan OK untuk memilih.

5 Masukkan kata sandi empat digit yang Anda gunakan saat ini.

- Gunakan mikrofon keypad.
- Tekan ▲ atau ▼ untuk mengedit nilai numerik setiap digit, lalu tekan OK untuk memasukkan dan berpindah ke digit selanjutnya. Nada indikator positif akan terdengar untuk setiap digit yang ditekan.

6 Tekan OK untuk memasukkan kata sandi.

Jika kata sandi salah, layar menampilkan Kata Sandi Salah dan otomatis kembali ke menu sebelumnya.

7 Lakukan salah satu langkah berikut:

- Tekan ▲ atau ▼ ke Aktifkan. Tekan OK untuk memilih.
  Layar akan menampilkan ✓ di sebelah Nyala.
- Tekan ▲ atau ▼ ke Nonaktifkan. Tekan OK untuk memilih.
  Layar akan menampilkan ✓ di sebelah Mati.

4.10.29.4

Mengganti Kata Sandi

Ikuti prosedur untuk mengganti kata sandi di radio Anda.

1 Tekan OK untuk mengakses menu.

2 Tekan ▲ atau ▼ ke Utilitas. Tekan OK untuk memilih.

3 Tekan ▲ atau ▼ ke Pengaturan Radio.

Tekan OK untuk memilih.

4 Tekan ▲ atau ▼ ke `Kunci Kata Sandi.`

Tekan OK untuk memilih.

5 Masukkan kata sandi empat digit saat ini, lalu tekan OK untuk melanjutkan.

Jika kata sandi salah, layar menampilkan `Kata Sandi Salah`, dan otomatis kembali ke menu sebelumnya.

6 Tekan ▲ atau ▼ ke `Ubah Kata Sandi.`

Tekan OK untuk memilih.

7 Masukkan kata sandi empat digit baru, lalu tekan OK untuk melanjutkan.

8 Masukkan kembali kata sandi empat digit baru, lalu tekan OK untuk melanjutkan.

Jika berhasil, layar menampilkan `Kata Sandi Diubah.`
Jika tidak berhasil, layar menampilkan `Kata Sandi Tidak Cocok.`

Layar kembali ke menu sebelumnya secara otomatis.

4.10.30

Daftar Notifikasi

Radio Anda dilengkapi daftar Pemberitahuan yang akan mengumpulkan semua aktivitas yang belum dibaca pada saluran, misalnya pesan teks yang belum dibaca, pesan telemetri, panggilan tidak terjawab, dan peringatan panggilan.

Layar menampilkan ikon **Notifikasi** ketika terdapat satu atau lebih kejadian dalam daftar Notifikasi.

Daftar ini mendukung maksimal 40 kejadian tak terbaca. Jika daftar penuh, kejadian selanjutnya menggantikan kejadian paling lama secara otomatis. Setelah dibaca, kejadian dihapus dari daftar Notifikasi.

Untuk aktivitas pesan teks, panggilan tidak terjawab, peringatan panggilan, jumlah maksimum pemberitahuan adalah 30 pesan teks dan 10 panggilan tidak terjawab atau peringatan panggilan. Jumlah maksimum ini akan tergantung pada kemampuan daftar fitur (tiket tugas, pesan teks, atau panggilan tidak terjawab atau peringatan panggilan).

4.10.30.1

Mengakses Daftar Notifikasi

Ikuti prosedur untuk mengakses daftar Notifikasi di radio Anda.

1 Tekan OK untuk mengakses menu.

2 Tekan atau ke Notifikasi. Tekan OK untuk memilih.

3 Tekan atau ke kejadian yang diperlukan.

Tekan OK untuk memilih.

Tekan lama untuk kembali ke layar Awal.

4.10.31

Pemrograman Melalui Udara

Dealer dapat memperbarui radio Anda dari jauh menggunakan Over-the-Air Programming (OTAP) tanpa koneksi fisik. Selain itu, beberapa pengaturan juga dapat dikonfigurasi menggunakan OTAP.

Ketika radio melakukan OTAP, LED hijau berkedip.

Ketika radio menerima data volume tinggi:

- Layar menampilkan ikon **Data Volume Tinggi**.
- Saluran menjadi sibuk.
- Nada negatif akan berbunyi jika Anda menekan tombol **PTT**.

Setelah OTAP selesai, tergantung pada konfigurasi:

- Nada akan berbunyi. Layar menampilkan Memulai Ulang Pembaruan. Radio memulai ulang dengan mati dan menyala lagi.
- Anda dapat memilih Mulai Ulang Sekarang atau Tunda. Jika Anda memilih Tunda, radio kembali ke layar sebelumnya. Layar menampilkan ikon **Pencatat Waktu Penundaan OTAP** sampai mulai ulang otomatis terjadi.

Jika radio menyala setelah mulai ulang otomatis:

- Jika berhasil, layar menampilkan Pembaruan Perangkat Lunak Selesai.
- Jika pembaruan program gagal, nada akan berbunyi, LED merah berkedip sekali, dan layar menampilkan Sw

`Update Failed (Pembaruan Perangkat Lunak Gagal).`

PEMBERITAHUAN:
Jika pembaruan pemrograman gagal, tanda kegagalan pembaruan perangkat lunak akan muncul setiap kali Anda menyalakan radio. Hubungi dealer Anda untuk memprogram ulang radio dengan perangkat lunak terbaru demi menghindari kemunculan tanda kegagalan pembaruan perangkat lunak.

Lihat Memeriksa Informasi Pembaruan Perangkat Lunak di halaman 241 untuk perangkat lunak versi terbaru.

4.10.32

Memilih Mode Koneksi Periferal Pihak Ketiga

Ikuti prosedur untuk memilih salah satu mode koneksi periferal pihak ketiga berikut:

- Motorola Solutions
- PC dan Audio
- Aksesori Data
- Telemetri
- Generik

1. Tekan OK untuk mengakses menu.
2. Tekan ▲ atau ▼ ke `Utilitas`. Tekan OK untuk memilih.
3. Tekan ▲ atau ▼ ke `Pengaturan Radio`. Tekan OK untuk memilih.
4. Tekan ▲ atau ▼ ke `Jenis Kabel`. Tekan OK untuk memilih.
5. Tekan ▲ atau ▼ ke mode koneksi yang diinginkan. Tekan OK untuk memilih.

   Layar akan menampilkan mode koneksi yang dipilih. Layar kembali ke menu sebelumnya.

4.10.33

Indikator Kekuatan Sinyal Penerimaan

Dengan fitur ini, Anda dapat melihat nilai Indikator Kekuatan Sinyal Diterima (RSSI).

Layar menampilkan ikon **RSSI** di sudut kanan atas. Lihat Ikon Layar untuk informasi selengkapnya tentang ikon **RSSI**.

4.10.33.1

Melihat Nilai RSSI

Pasang Mikrofon Keypad Navigasi 4 Arah (nomor komponen Motorola Solutions RMN5127_) ke radio Anda.

Pada layar awal, menggunakan Mikrofon Keypad Navigasi 4 Arah, tekan ◀ tiga kali dan segera tekan ▶ tiga kali.

Layar menampilkan nilai RSSI yang sekarang.

Untuk kembali ke layar awal, tekan dan tahan ⮌ .

4.10.34

Konfigurasi Panel Depan

Anda dapat mengatur parameter fitur tertentu pada Konfigurasi Panel Depan (FPC) untuk meningkatkan penggunaan radio.

4.10.34.1

Masuk ke Mode Konfigurasi Panel Depan

Untuk kembali ke layar Awal, tekan lama ⮌ kapan saja.

1. Tekan OK untuk mengakses menu.
2. Tekan ▲ atau ▼ ke `Utilitas`. Tekan OK untuk memilih.
3. Tekan ▲ atau ▼ ke `Program Radio`. Tekan OK untuk memilih.

4.10.34.2

Mengedit Parameter Mode FPP

Gunakan tombol berikut ini sesuai kebutuhan ketika menelusuri parameter fitur.

- , – Gulir di antara opsi, naikkan/turunkan nilai, atau telusuri secara vertikal.
- OK – Pilih opsi atau masuk ke sub-menu.
- – Tekan sebentar untuk kembali ke menu sebelumnya atau keluar dari layar pilihan. Tekan lama untuk kembali ke layar Awal.

4.10.35

Pengoperasian Wi-Fi

Fitur ini memungkinkan Anda mengatur dan terhubung ke jaringan Wi-Fi. Wi-Fi mendukung pembaruan untuk firmware, codeplug, dan sumber daya radio seperti paket bahasa dan pengumuman suara.

PEMBERITAHUAN:
Fitur ini hanya berlaku untuk XiR M8668i/CM7668i saja.

Wi-Fi® adalah merek dagang terdaftar dari Wi-Fi Alliance®.

Radio Anda mendukung WEP/WPA/WPA2-Personal dan jaringan Wi-Fi WPA/WPA2-Enterprise.

Jaringan Wi-Fi WEP/WPA/WPA2-Personal

Menggunakan autentikasi berbasis kunci (kata sandi) yang dibagikan sebelumnya.

Kunci yang dibagikan sebelumnya bisa dimasukkan menggunakan menu atau CPS/RM.

Jaringan Wi-Fi WPA/WPA2-Enterprise

Menggunakan autentikasi berbasis sertifikat.

Radio Anda harus dikonfigurasikan terlebih dahulu dengan sertifikat.

PEMBERITAHUAN:
Tanyakan kepada dealer atau administrator sistem Anda untuk terhubung ke jaringan Wi-Fi WPA/WPA2-Enterprise.

Tombol terprogram **Wi-Fi Aktif atau Nonaktif** dialokasikan oleh dealer atau administrator sistem Anda. Tanyakan kepada dealer atau administrator sistem Anda untuk mengetahui bagaimana radio Anda diprogram.

Pengumuman Suara untuk tombol terprogram **Wi-Fi Aktif atau Nonaktif** dapat disesuaikan melalui CPS sesuai dengan kebutuhan pengguna. Tanyakan kepada dealer

atau administrator sistem Anda untuk informasi selengkapnya.

PEMBERITAHUAN:
Anda dapat mengaktifkan atau menonaktifkan Wi-Fi dari jarak jauh menggunakan radio yang ditentukan (lihat Mengaktifkan atau Menonaktifkan Wi-Fi dari Jarak Jauh Menggunakan Radio Khusus (Kontrol Individu) di halaman 211 dan Mengaktifkan atau Menonaktifkan Wi-Fi dari Jarak Jauh Menggunakan Radio Khusus (Kontrol Grup) di halaman 212). Tanyakan kepada dealer atau administrator sistem Anda untuk informasi selengkapnya.

4.10.35.1

Mengaktifkan atau Menonaktifkan Wi-Fi

1 Tekan tombol **Wi-Fi Aktif atau Nonaktif** terprogram. Pengumuman Suara berbunyi ketika Wi-Fi Diaktifkan atau Wi-Fi Dinonaktifkan.

2 Akses fitur ini menggunakan menu.

a Tekan OK untuk mengakses menu.

b Tekan ▲ atau ▼ ke `WiFi` dan tekan OK untuk memilih.

c Tekan ▲ atau ▼ ke `WiFi Aktif` dan tekan OK untuk memilih.

d Tekan OK untuk mengaktifkan/menonaktifkan Wi-Fi.

Jika Wi-Fi diaktifkan, layar akan menampilkan ✓ di sebelah `Diaktifkan`.

Jika Wi-Fi dinonaktifkan, ✓ hilang dari sebelah `Diaktifkan`.

4.10.35.2

Mengaktifkan atau Menonaktifkan Wi-Fi dari Jarak Jauh Menggunakan Radio Khusus (Kontrol Individu)

Anda dapat mengaktifkan atau menonaktifkan Wi-Fi dari jarak jauh di Kontrol Individu (Satu ke Satu).

PEMBERITAHUAN:
Hanya radio dengan pengaturan CPS khusus yang mendukung fungsi ini, tanyakan kepada dealer atau administrator sistem Anda untuk informasi lebih lanjut.

1. Lakukan salah satu langkah berikut:
   - Tekan lama tombol yang dapat diprogram. Gunakan keypad untuk memasukkan ID, dan tekan OK untuk memilih. Lanjutkan ke langkah 3.
   - Tekan OK untuk mengakses menu.
2. Tekan ▲ atau ▼ ke `Kontak` dan tekan OK untuk memilih.
3. Tekan ▲ atau ▼ ke `Kontrol WiFi` dan tekan OK untuk memilih.
4. Tekan ▲ atau ▼ untuk memilih `Nyala` atau `Mati`.
5. Tekan OK untuk memilih.

Jika berhasil, layar menampilkan pemberitahuan mini positif.

Jika gagal, layar menampilkan pemberitahuan mini negatif.

4.10.35.3

Mengaktifkan atau Menonaktifkan Wi-Fi dari Jarak Jauh Menggunakan Radio Khusus (Kontrol Grup)

Anda dapat mengaktifkan atau menonaktifkan Wi-Fi dari jarak jauh di Kontrol Grup (Satu ke Banyak).

PEMBERITAHUAN:
Hanya radio dengan pengaturan CPS khusus yang mendukung fungsi ini, tanyakan kepada dealer atau administrator sistem Anda untuk informasi lebih lanjut.

1. Tekan OK untuk mengakses menu.
2. Tekan ▲ atau ▼ ke `Kontak` dan tekan OK untuk memilih.
3. Tekan ▲ atau ▼ untuk memilih alias atau ID subscriber yang diinginkan.
4. Tekan ▲ atau ▼ ke `Kontrol WiFi` dan tekan OK untuk memilih.
5. Tekan ▲ atau ▼ untuk memilih `Nyala` atau `Mati`.
6. Tekan OK untuk memilih.

Jika berhasil, layar menampilkan `Berhasil Dikirim`.

Jika gagal, layar menampilkan pemberitahuan mini negatif.

4.10.35.4

Menghubungkan ke Titik Akses Jaringan

Ketika Wi-Fi diaktifkan, radio memindai dan menghubungkan ke titik akses jaringan.

PEMBERITAHUAN:
Anda juga dapat menghubungkan ke titik akses jaringan menggunakan menu.

Titik akses jaringan Wi-Fi WPA-Enterprise telah dikonfigurasikan sebelumnya. Tanyakan kepada dealer atau administrator sistem Anda untuk mengetahui bagaimana radio Anda diprogram.

1 Tekan OK untuk mengakses menu.

2 Tekan ▲ atau ▼ ke WiFi dan tekan OK untuk memilih.

3 Tekan ▲ atau ▼ ke Jaringan dan tekan OK untuk memilih.

4 Tekan ▲ atau ▼ ke titik akses jaringan dan tekan OK untuk memilih.

PEMBERITAHUAN:
Untuk Wi-Fi WPA-Enterprise, jika titik akses jaringan tidak dikonfigurasikan sebelumnya, opsi Hubungkan tidak tersedia.

5 Tekan ▲ atau ▼ ke Hubungkan dan tekan OK untuk memilih.

6 Untuk Wi-Fi WPA-Personal, masukkan kata sandi dan tekan OK .

7 Untuk Wi-Fi WPA-Enterprise, kata sandi dikonfigurasikan dengan RM.

Jika kata sandi yang dikonfigurasikan sebelumnya benar, radio Anda otomatis akan terhubung ke titik akses jaringan yang dipilih.

Jika kata sandi yang dikonfigurasikan sebelumnya salah, layar menampilkan `Autentikasi Gagal`, dan otomatis kembali ke menu sebelumnya.

Jika berhasil terhubung, radio menampilkan pemberitahuan dan titik akses jaringan disimpan ke dalam daftar profil.

Jika tidak berhasil terhubung, radio menampilkan layar pemberitahuan kegagalan sesaat dan otomatis kembali ke menu sebelumnya.

4.10.35.5

Memeriksa Status Koneksi Wi-Fi

Tekan tombol terprogram **Permintaan Status Wi-Fi** untuk mengetahui status koneksi menggunakan Pengumuman Suara. Pengumuman Suara berbunyi ketika Wi-Fi Dinonaktifkan, Wi-Fi Diaktifkan, tetapi tidak untuk Tidak Ada Koneksi atau Wi-Fi Aktif dengan Koneksi.

- Layar menampilkan `WiFi Nonaktif` saat Wi-Fi nonaktif.
- Layar menampilkan `WiFi Aktif, Tersambung` saat radio tersambung ke jaringan.
- Layar menampilkan `WiFi Aktif, Terputus` saat Wi-Fi aktif tetapi radio tidak tersambung ke jaringan.

Pengumuman Suara untuk hasil kueri status Wi-Fi dapat dikustomisasi lewat CPS sesuai dengan kebutuhan pengguna. Tanyakan kepada dealer atau administrator sistem Anda untuk informasi selengkapnya.

PEMBERITAHUAN:
Tombol terprogram **Kueri Status Wi-Fi** dialokasikan oleh dealer atau administrator sistem Anda. Tanyakan kepada dealer atau administrator sistem Anda untuk mengetahui bagaimana radio Anda diprogram.

4.10.35.6

Menyegarkan Daftar Jaringan

- Lakukan tindakan berikut ini untuk menyegarkan daftar jaringan melalui menu.

  a. Tekan OK untuk mengakses menu.

  b. Tekan ▲ atau ▼ ke `WiFi` dan tekan OK untuk memilih.

c. Tekan ▲ atau ▼ ke Jaringan dan tekan OK untuk memilih.

Ketika Anda masuk ke menu Jaringan, radio menyegarkan daftar jaringan secara otomatis.

- Jika Anda sudah berada di menu Jaringan, lakukan tindakan berikut ini untuk menyegarkan daftar jaringan.

  Tekan ▲ atau ▼ ke Segarkan dan tekan OK untuk memilih.

  Radio akan menyegarkan dan menampilkan daftar jaringan terbaru.

4.10.35.7

Menambahkan Jaringan

PEMBERITAHUAN:
Tugas ini tidak bisa diterapkan ke jaringan Wi-Fi WPA-Enterprise.

Jika jaringan yang dipilih tidak terdapat dalam daftar jaringan tersedia, lakukan tindakan berikut ini untuk menambahkan jaringan.

1. Tekan OK untuk mengakses menu.
2. Tekan ▲ atau ▼ ke WiFi dan tekan OK untuk memilih.
3. Tekan ▲ atau ▼ ke Jaringan dan tekan OK untuk memilih.
4. Tekan ▲ atau ▼ ke Tambah Jaringan dan tekan OK untuk memilih.
5. Masukkan Service Set Identifier (SSID) dan tekan OK .
6. Tekan ▲ atau ▼ ke Buka dan tekan OK untuk memilih.

7 Masukkan kata sandi dan tekan OK .

Radio menampilkan pemberitahuan mini positif untuk menunjukkan bahwa jaringan berhasil disimpan.

4.10.35.8

Melihat Detail Titik Akses Jaringan

Anda bisa melihat detail titik akses jaringan.

1 Tekan OK untuk mengakses menu.

2 Tekan atau ke WiFi dan tekan OK untuk memilih.

3 Tekan atau ke Jaringan dan tekan OK untuk memilih.

4 Tekan atau ke titik akses jaringan dan tekan OK untuk memilih.

5 Tekan atau ke Lihat Detail dan tekan OK untuk memilih.

PEMBERITAHUAN:
Wi-Fi WPA-Personal dan WPA-Enterprise menampilkan detail yang berbeda atas Titik Akses Jaringan.

Wi-Fi WPA-Personal

Untuk titik akses jaringan yang terhubung, radio Anda menampilkan Service Set Identifier (SSID), Security Mode, alamat Media Access Control (MAC), dan alamat Internet Protocol (IP).

Untuk titik akses jaringan yang tidak terhubung, radio Anda menampilkan SSID dan Security Mode.

Wi-Fi WPA-Enterprise

Untuk titik akses jaringan yang terhubung, radio Anda menampilkan SSID, Security Mode, Identity, Extended Authentication Protocol (EAP) Method, Phase 2 Authentication, Cert Name, alamat MAC, alamat IP, Gateway, DNS1, dan DNS2.

Untuk titik akses jaringan yang tidak terhubung, radio Anda menampilkan SSID, Security Mode, Identity, EAP Method, Phase 2 Authentication, dan Cert Name.

4.10.35.9

Menghapus Titik Akses Jaringan

PEMBERITAHUAN:
Tugas ini tidak bisa diterapkan ke jaringan Wi-Fi Enterprise.

Lakukan tindakan berikut ini untuk menghapus titik akses jaringan dari daftar profil.

1. Tekan OK untuk mengakses menu.
2. Tekan atau ke WiFi dan tekan OK untuk memilih.
3. Tekan atau ke Jaringan dan tekan OK untuk memilih.
4. Tekan atau ke titik akses jaringan yang dipilih dan tekan OK untuk memilih.
5. Tekan atau ke Hapus dan tekan OK untuk memilih.
6. Tekan atau ke Ya dan tekan OK untuk memilih.

   Radio menampilkan pemberitahuan mini positif untuk menunjukkan bahwa titik akses jaringan yang dipilih berhasil dihapus.

4.10.36

Penetapan Nomor Grup Dinamis (DGNA)

Penetapan Nomor Grup Dinamis (DGNA) adalah fitur yang memungkinkan konsol menetapkan dan melepaskan grup bicara baru dari radio Anda melalui udara.

Saat konsol menetapkan DGNA ke radio Anda, radio Anda berada dalam mode DGNA:

- Nada akan berbunyi.
- Layar akan menampilkan <Alias Grup Bicara DGNA> Ditugaskan sebentar sebelum dikembalikan ke layar awal.

- Ikon DGNA akan ditampilkan pada bilah status.
- Layar awal menampilkan alias grup bicara DGNA.

Saat konsol menghapus DGNA dari radio Anda, radio Anda kembali ke grup bicara sebelumnya:

- Nada akan berbunyi.
- Layar akan menampilkan `<Alias Grup Bicara DGNA> Dihapus` sebentar sebelum dikembalikan ke layar awal.
- Ikon DGNA akan hilang pada bilah status.
- Layar awal menampilkan alias grup bicara sebelumnya.

Bergantung pada cara pemrograman radio Anda, Anda bisa melihat, mengedit, dan mendengarkan daftar pindai asli dan kelompok bicara non-DGNA.

Jika radio Anda berada dalam mode DGNA, menekan tombol PTT memungkinkan Anda berkomunikasi hanya dengan grup bicara DGNA saat ini. Untuk berkomunikasi dengan kelompok bicara non-DGNA sebelumnya, program tombol **Akses Satu Sentuhan**. Lihat Melakukan Panggilan Non-DGNA di halaman 218 .

PEMBERITAHUAN:
Tanyakan kepada dealer atau administrator sistem Anda untuk mengetahui bagaimana radio Anda diprogram.

4.10.36.1

Melakukan Panggilan DGNA

Saat radio Anda berada dalam mode DGNA, tekan tombol **PTT** untuk melakukan panggilan.

- Nada DNA akan terdengar.
- Layar menampilkan ikon DGNA dan alias grup bicara DGNA.

PEMBERITAHUAN:
Jika radio Anda tidak berada dalam mode DGNA dan Anda menekan tombol **Akses Satu Sentuhan**, radio Anda akan membunyikan nada, yang mengindikasikan kesalahan. Layar tidak berubah.

4.10.36.2

Melakukan Panggilan Non-DGNA

1 Tekan tombol **Akses Satu Sentuhan** terprogram.
   - Sebuah nada positif berbunyi.
   - Pengumuman Suara mengeluarkan suara Panggilan Pengganti Satu Sentuhan.

- Layaar menampilkan . `<Alias Grup Bicara>` dan `Tekan PTT` untuk sementara.

PEMBERITAHUAN:
Jika radio Anda tidak berada dalam mode DGNA dan Anda menekan tombol **Akses Satu Sentuhan**, radio Anda akan membunyikan nada negatif, yang mengindikasikan kesalahan. Layar tidak berubah.

2 Tekan tombol **PTT** sebelum nada negatif berbunyi dan radio kembali ke layar awal.

PEMBERITAHUAN:
Saat radio Anda berada di layar awal, menekan PTT membuat panggilan ke grup bicara DGNA.

4.10.36.3
Menerima dan Menjawab Panggilan DGNA

Apabila Anda menerima panggilan DGNA:

- Nada DNA akan terdengar.
- Tampilan menunjukkan ikon DGNA, alias grup bicara DGNA, dan alias radio.
- Radio bersuara dan panggilan masuk berbunyi melalui speaker.

1 Tekan tombol **PTT** untuk menjawab panggilan.

2 Lepaskan tombol **PTT** untuk mendengarkan.

4.11
Utilitas

Bab ini menjelaskan pengoperasian fungsi utilitas yang terdapat di radio Anda.

4.11.1
Tingkat Daya

Anda dapat mengatur setelan daya ke tinggi atau rendah untuk setiap saluran.

Tinggi
Setelan tinggi memungkinkan komunikasi dengan pengguna radio yang berada dalam jarak cukup jauh dari Anda.

Rendah

Setelan rendah memungkinkan komunikasi dengan radio yang terletak dalam jarak dekat.

PEMBERITAHUAN:
Fitur ini tidak tersedia dalam saluran Citizens Band yang berada dalam frekuensi yang sama.

4.11.1.1

Mengatur Tingkat Daya

Ikuti prosedur untuk mengatur tingkat daya di radio Anda.

1 Lakukan salah satu langkah berikut:

- Tekan tombol terprogram **Tingkat Daya**. Lompati langkah-langkah di bawah ini.
- Tekan OK untuk mengakses menu.

2 Tekan ▲ atau ▼ ke `Utilitas`. Tekan OK untuk memilih.

3 Tekan ▲ atau ▼ ke `Pengaturan Radio`. Tekan OK untuk memilih.

4 Tekan ▲ atau ▼ ke `Daya`. Tekan OK untuk memilih.

5 Lakukan salah satu langkah berikut:

- Tekan ▲ atau ▼ ke `Tinggi`. Tekan OK untuk memilih.
  Layar menampilkan ✓ di sebelah `Tinggi`.
- Tekan ▲ atau ▼ ke `Rendah`. Tekan OK untuk memilih.
  Layar menampilkan ✓ di sebelah `Rendah`.

6 Tekan lama untuk kembali ke layar Awal.

4.11.2

Mengaktifkan atau Menonaktifkan Nada/Peringatan Radio

Anda dapat mengaktifkan dan menonaktifkan semua nada dan peringatan radio, jika diperlukan, kecuali untuk nada peringatan Darurat yang masuk Ikuti prosedur untuk

mengaktifkan atau menonaktifkan nada dan peringatan di radio Anda.

1 Lakukan salah satu langkah berikut:
   - Tekan tombol **Nada/Peringatan** yang terprogram. Lompati langkah-langkah berikut ini.
   - Tekan OK untuk mengakses menu.

2 Tekan ▲ atau ▼ ke `Utilitas`. Tekan OK untuk memilih.

3 Tekan ▲ atau ▼ ke `Pengaturan Radio`. Tekan OK untuk memilih.

4 Tekan ▲ atau ▼ ke `Nada/Peringatan`. Tekan OK untuk memilih.

5 Tekan ▲ atau ▼ ke `Semua Nada`. Tekan OK untuk memilih.

6 Tekan OK untuk mengaktifkan atau menonaktifkan semua nada dan peringatan. Layar menampilkan salah satu hasil berikut ini:
   - Jika diaktifkan, ✓ muncul di sebelah `Diaktifkan`.
   - Jika dinonaktifkan, ✓ hilang dari sebelah `Diaktifkan`.

4.11.3
Mengaktifkan atau Menonaktifkan Nada Keypad

Ikuti prosedur untuk mengaktifkan atau menonaktifkan nada keypad di radio Anda.

1 Tekan OK untuk mengakses menu.

2 Tekan ▲ atau ▼ ke `Utilitas`.Tekan OK untuk memilih.

3 Tekan ▲ atau ▼ ke `Pengaturan Radio`.Tekan OK untuk memilih.

4 Tekan ▲ atau ▼ ke Nada/Peringatan.

Tekan OK untuk memilih.

5 Tekan ▲ atau ▼ ke Nada Keypad. Tekan OK untuk memilih.

6 Tekan OK untuk mengaktifkan atau menonaktifkan nada keypad. Layar menampilkan salah satu hasil berikut ini:

- Jika diaktifkan, ✓ muncul di sebelah Diaktifkan.
- Jika dinonaktifkan, ✓ hilang dari sebelah Diaktifkan.

4.11.4

Mengatur Tingkat Offset Volume Nada/Peringatan

Fitur ini menyesuaikan volume nada atau peringatan agar dapat lebih tinggi atau lebih rendah dibandingkan volume suara. Ikuti prosedur untuk mengatur tingkat offset volume nada dan peringatan di radio Anda.

1 Tekan OK untuk mengakses menu.

2 Tekan ▲ atau ▼ ke Utilitas. Tekan OK untuk memilih.

3 Tekan ▲ atau ▼ ke Pengaturan Radio.

Tekan OK untuk memilih.

4 Tekan ▲ atau ▼ ke Nada/Peringatan.

Tekan OK untuk memilih.

5 Tekan ▲ atau ▼ ke Offset Vol.. Tekan OK untuk memilih.

6 Tekan ▲ atau ▼ ke tingkat offset volume yang diinginkan.

Nada umpan balik akan berbunyi bersama setiap tingkat offset volume yang berhubungan.

7 Lakukan salah satu langkah berikut:

- Tekan OK untuk memilih. Level offset volume yang diperlukan telah disimpan.
- Tekan untuk keluar. Perubahan dibuang.

4.11.5

Mengaktifkan atau Menonaktifkan Nada Izin Bicara

Ikuti prosedur untuk mengaktifkan atau menonaktifkan Nada Izin Bicara di radio Anda.

1. Tekan OK untuk mengakses menu.
2. Tekan atau ke Utilitas. Tekan OK untuk memilih.
3. Tekan atau ke Pengaturan Radio. Tekan OK untuk memilih.
4. Tekan atau ke Nada/Peringatan. Tekan OK untuk memilih.
5. Tekan atau ke Izin Bicara. Tekan OK untuk memilih.
6. Tekan OK untuk mengaktifkan atau menonaktifkan Nada Izin Bicara.

   Layar menampilkan salah satu hasil berikut ini:

   - Jika diaktifkan, ✔ muncul di sebelah Diaktifkan.
   - Jika dinonaktifkan, ✔ hilang dari sebelah Diaktifkan.

4.11.6

Mengaktifkan atau Menonaktifkan Nada Penyalaan

Ikuti prosedur untuk mengaktifkan atau menonaktifkan Nada Penyalaan di radio Anda.

1 Tekan OK untuk mengakses menu.

2 Tekan ▲ atau ▼ ke Utilitas. Tekan OK untuk memilih.

3 Tekan ▲ atau ▼ ke Pengaturan Radio.

Tekan OK untuk memilih.

4 Tekan ▲ atau ▼ ke Nada/Peringatan.

Tekan OK untuk memilih.

5 Tekan ▲ atau ▼ ke Penyalaan. Tekan OK untuk memilih.

6 Tekan OK untuk mengaktifkan atau menonaktifkan Nada Penyalaan. Layar menampilkan salah satu hasil berikut ini:

- Jika diaktifkan, ✓ muncul di sebelah Diaktifkan.
- Jika dinonaktifkan, ✓ hilang dari sebelah Diaktifkan.

4.11.7

Mengatur Nada Peringatan Pesan Teks

Anda dapat mengatur nada peringatan pesan teks ke Sesaat atau Berulang untuk tiap entri dalam daftar Kontak. Ikuti prosedur untuk mengatur nada peringatan pesan teks di radio Anda.

1 Tekan OK untuk mengakses menu.

2 Tekan ▲ atau ▼ ke Kontak. Tekan OK untuk memilih.

3 Tekan ▲ atau ▼ ke alias atau ID yang diinginkan. Tekan OK untuk memilih.

4 Tekan ▲ atau ▼ ke Peringatan Pesan.

Tekan OK untuk memilih.

5 Lakukan salah satu langkah berikut:

- Tekan ▲ atau ▼ ke Sementara. Tekan OK untuk memilih.
  Layar menampilkan ✓ di sebelah Sementara.
- Tekan ▲ atau ▼ ke Berulang. Tekan OK untuk memilih.
  Layar menampilkan ✓ di sebelah Berulang.

4.11.8

Mengubah Mode Layar

Anda dapat mengubah mode layar radio antara Siang atau Malam, sesuai kebutuhan. Fitur ini memengaruhi palet warna pada layar. Ikuti prosedur untuk mengubah mode layar radio.

1 Lakukan salah satu langkah berikut:
   - Tekan tombol **Mode Tampilan** terprogram. Lompati langkah-langkah berikut ini.
   - Tekan OK untuk mengakses menu.

2 Tekan ▲ atau ▼ ke Utilitas. Tekan OK untuk memilih.

3 Tekan ▲ atau ▼ ke Pengaturan Radio.
   Tekan OK untuk memilih.

4 Tekan ▲ atau ▼ ke Tampilan. Tekan OK untuk memilih.
   Layar menampilkan Mode Siang dan Mode Malam.

5 Tekan ▲ atau ▼ ke pengaturan yang diinginkan. Tekan OK untuk memilih.
   Layar menampilkan ✓ di sebelah pengaturan yang dipilih.

4.11.9

Mengatur Kecerahan Layar

Ikuti prosedur untuk mengatur kecerahan layar di radio Anda. Kecerahan layar tidak dapat disesuaikan bila Kecerahan Otomatis diaktifkan.

1 Lakukan salah satu langkah berikut:
   - Tekan tombol **Kecerahan** terprogram. Lompati langkah-langkah berikut ini.
   - Tekan [OK] untuk mengakses menu.

2 Tekan [▲] atau [▼] ke `Utilitas`. Tekan [OK] untuk memilih.

3 Tekan [▲] atau [▼] ke `Pengaturan Radio`. Tekan [OK] untuk memilih.

4 Tekan [▲] atau [▼] ke `Kecerahan`. Tekan [OK] untuk memilih.

   Layar menampilkan bilah kemajuan.

5 Tekan [▲] atau [▼] untuk mengurangi atau menambah kecerahan layar. Tekan [OK] untuk memilih.

   Nilai pengaturan bervariasi, mulai dari 1 sampai 8.

4.11.10

Mengaktifkan atau Menonaktifkan Klakson/Lampu

Radio dapat memberi tahu Anda bila ada panggilan masuk melalui fitur klakson dan lampu. Jika diaktifkan, panggilan masuk akan membunyikan klakson dan menyalakan lampu kendaraan. Fitur ini harus dipasang melalui konektor aksesori belakang pada radio oleh dealer. Ikuti prosedur untuk mengaktifkan atau menonaktifkan klakson dan lampu pada radio Anda.

1 Lakukan salah satu langkah berikut:
   - Tekan tombol **Klakson/Lampu** yang telah diprogram. Lompati langkah-langkah di bawah ini.
   - Tekan [OK] untuk mengakses menu.

2 Tekan ▲ atau ▼ ke Utilitas.Tekan OK untuk memilih.

3 Tekan ▲ atau ▼ ke Pengaturan Radio.Tekan OK untuk memilih.

4 Tekan ▲ atau ▼ ke Klakson/Lampu. Tekan OK untuk memilih.

5 Tekan OK untuk mengaktifkan atau menonaktifkan Klakson/Lampu. Layar menampilkan salah satu hasil berikut ini:

- Jika diaktifkan, ✓ muncul di sebelah Diaktifkan.
- Jika dinonaktifkan, ✓ hilang dari sebelah Diaktifkan.

4.11.11

Mengaktifkan atau Menonaktifkan Indikator LED

Ikuti prosedur untuk mengaktifkan atau menonaktifkan indikator LED di radio Anda.

1 Tekan OK untuk mengakses menu.

2 Tekan ▲ atau ▼ ke Utilitas. Tekan OK untuk memilih.

3 Tekan ▲ atau ▼ ke Pengaturan Radio. Tekan OK untuk memilih.

4 Tekan ▲ atau ▼ ke Indikator LED. Tekan OK untuk memilih.

5 Tekan OK untuk mengaktifkan atau menonaktifkan Indikator LED.

Layar menampilkan salah satu hasil berikut ini:

- Jika diaktifkan, ✓ muncul di sebelah Diaktifkan.

- Jika dinonaktifkan, ✓ hilang dari sebelah Diaktifkan.

4.11.12

Mengaktifkan atau Menonaktifkan Sistem Public Address

Ikuti prosedur untuk mengaktifkan atau menonaktifkan sistem public address (PA) internal radio Anda.

1 Lakukan salah satu langkah berikut:
- Tekan tombol **Public Address** yang diprogram. Lompati langkah-langkah berikut ini.
- Tekan OK untuk mengakses menu.

2 Tekan ▲ atau ▼ ke Utilitas. Tekan OK untuk memilih.

3 Tekan ▲ atau ▼ ke Pengaturan Radio. Tekan OK untuk memilih.

4 Tekan ▲ atau ▼ ke Public Address. Tekan OK untuk memilih.

5 Tekan OK untuk mengaktifkan atau menonaktifkan Public Address.
- Jika diaktifkan, ✓ muncul di sebelah Diaktifkan.
- Jika dinonaktifkan, ✓ hilang dari sebelah Diaktifkan.

4.11.13

Mengaktifkan atau Menonaktifkan Sistem Public Address Eksternal

Ikuti prosedur untuk mengaktifkan atau menonaktifkan sistem public address (PA) eksternal radio Anda.

1 Lakukan salah satu langkah berikut:
- Tekan tombol **Public Address Ekst** yang diprogram. Lompati langkah-langkah berikut ini.
- Tekan OK untuk mengakses menu.

2 Tekan ▲ atau ▼ ke Utilitas. Tekan OK untuk memilih.

3 Tekan ▲ atau ▼ ke Pengaturan Radio.

Tekan OK untuk memilih.

4 Tekan ▲ atau ▼ ke Public Address Eksternal. Tekan OK untuk memilih.

5 Tekan OK untuk mengaktifkan atau menonaktifkan public address eksternal.

- Jika diaktifkan, ✓ muncul di sebelah Diaktifkan.
- Jika dinonaktifkan, ✓ hilang dari sebelah Diaktifkan.

4.11.14

Mengaktifkan atau Menonaktifkan Layar Pengantar

Anda bisa mengaktifkan dan menonaktifkan Layar Pengantar dengan mengikuti prosedur ini.

1 Tekan OK untuk mengakses menu.

2 Tekan ▲ atau ▼ ke Utilitas. Tekan OK untuk memilih.

3 Tekan ▲ atau ▼ ke Pengaturan Radio.

Tekan OK untuk memilih.

4 Tekan ▲ atau ▼ ke Tampilan. Tekan OK untuk memilih.

5 Tekan ▲ atau ▼ ke Layar Pengantar.

Tekan OK untuk memilih.

6 Tekan OK untuk mengaktifkan atau menonaktifkan Layar Pengantar.

Layar menampilkan salah satu hasil berikut ini:

- Jika diaktifkan, ✓ muncul di sebelah Diaktifkan.
- Jika dinonaktifkan, ✓ hilang dari sebelah Diaktifkan.

4.11.15

Mengatur Bahasa

Ikuti prosedur untuk mengatur bahasa di radio Anda.

1 Tekan OK untuk mengakses menu.

2 Tekan ▲ atau ▼ ke Utilitas. Tekan OK untuk memilih.

3 Tekan ▲ atau ▼ ke Pengaturan Radio.Tekan OK untuk memilih.

4 Tekan ▲ atau ▼ ke Bahasa. Tekan OK untuk memilih.

5 Tekan ▲ atau ▼ ke bahasa yang diinginkan.

Tekan OK untuk memilih.

Layar menampilkan ✓ di sebelah bahasa yang dipilih.

4.11.16

Mengidentifikasi Jenis Kabel

Lakukan langkah berikut untuk memilih jenis kabel yang digunakan pada radio Anda.

1 Tekan OK untuk mengakses menu.

2 Tekan ▲ atau ▼ ke Utilitas. Tekan OK untuk memilih.

3 Tekan ▲ atau ▼ ke `Pengaturan Radio`. Tekan OK untuk memilih.

4 Tekan ▲ atau ▼ ke `Jenis Kabel`. Tekan OK untuk memilih.

5 Jenis kabel saat ini akan ditandai dengan ✓.

4.11.17

Mengaktifkan atau Menonaktifkan Pengumuman Suara

Dengan fitur ini, radio dapat memberikan pesan suara tentang zona atau saluran yang telah ditetapkan oleh pengguna atau tombol yang dapat diprogram yang ditekan oleh pengguna.

Ini biasanya berguna ketika pengguna kesulitan untuk membaca konten yang ditampilkan di layar.

Indikator audio dapat diatur sesuai kebutuhan pelanggan. Ikuti prosedur untuk mengaktifkan atau menonaktifkan Pengumuman Suara di radio Anda.

4.11.18

Mengaktifkan atau Menonaktifkan Papan Opsi

Kemampuan papan opsi dalam setiap saluran dapat dialokasikan ke tombol yang dapat diprogram. Sebuah saluran dapat mendukung hingga 6 fitur papan opsi. Ikuti prosedur untuk mengaktifkan atau menonaktifkan papan opsi di radio Anda.

Tekan tombol **Papan Opsi** yang terprogram.

4.11.19

Teks ke Ucapan

Fitur Teks ke Ucapan hanya dapat diaktifkan oleh dealer Anda. Jika Teks ke Ucapan diaktifkan, fitur Pengumuman Suara dinonaktifkan secara otomatis. Jika Pengumuman Suara diaktifkan, fitur Teks ke Ucapan dinonaktifkan secara otomatis.

Fitur ini membuat radio dapat mengindikasikan fitur-fitur berikut ini melalui suara:

- Saluran Saat Ini
- Zona Saat Ini
- Fitur tombol terprogram aktif atau nonaktif
- Konten dari pesan teks yang diterima
- Konten dari Tiket Tugas yang diterima

Indikator audio dapat dikustomisasi menurut keperluan subscriber. Fitur ini biasanya berguna ketika pengguna kesulitan untuk membaca informasi yang ditampilkan di layar.

4.11.19.1

Mengatur Teks ke Ucapan

Ikuti prosedur untuk mengatur fitur Teks ke Ucapan.

1 Tekan OK untuk mengakses menu.

2 Tekan ▲ atau ▼ ke `Utilitas`. Tekan OK untuk memilih.

3 Tekan ▲ atau ▼ ke `Pengaturan Radio`.
Tekan OK untuk memilih.

4 Tekan ▲ atau ▼ ke `Pengumuman Suara`.
Tekan OK untuk memilih.

5 Tekan ▲ atau ▼ ke salah satu fitur berikut.
Tekan OK untuk memilih.
Fitur yang tersedia adalah sebagai berikut:

- `Semua`
- `Pesan`
- `Tiket Tugas`
- `Saluran`
- `Zona`
- `Tombol Program`

✓ muncul di sebelah pengaturan yang dipilih.

4.11.20

Mengatur Pencatat Waktu Menu

Anda dapat mengatur lama waktu radio Anda berada di menu sebelum otomatis beralih ke layar Awal. Ikuti prosedur untuk mengatur pencatat waktu menu.

1 Tekan OK untuk mengakses menu.

2 Tekan ▲ atau ▼ ke `Utilitas`. Tekan OK untuk memilih.

3 Tekan ▲ atau ▼ ke `Pengaturan Radio`. Tekan OK untuk memilih.

4 Tekan ▲ atau ▼ ke `Tampilan`. Tekan OK untuk memilih.

5 Tekan ▲ atau ▼ ke `Pencatat Waktu Menu`. Tekan OK untuk memilih.

6 Tekan ▲ atau ▼ ke pengaturan yang diinginkan. Tekan OK untuk memilih.

4.11.21

Mengaktifkan atau Menonaktifkan AGC Mikrofon Digital

Automatic Gain Control (AGC) Mikrofon Digital mengontrol gain mikrofon pada radio secara otomatis ketika melakukan transmisi pada sistem digital.
Fitur ini menekan audio yang keras atau mempertegas audio yang halus ke nilai yang telah ditetapkan untuk menghasilkan tingkat audio yang konsisten. Ikuti prosedur untuk mengaktifkan atau menonaktifkan AGC Mikrofon Digital di radio Anda.

1 Tekan OK untuk mengakses menu.

2 Tekan ▲ atau ▼ ke `Utilitas`. Tekan OK untuk memilih.

3 Tekan ▲ atau ▼ ke Pengaturan Radio.

Tekan OK untuk memilih.

4 Tekan ▲ atau ▼ ke Mic AGC-D. Tekan OK untuk memilih.

5 Tekan OK untuk mengaktifkan atau menonaktifkan AGC Mikrofon Digital.

Layar menampilkan salah satu hasil berikut ini:

- Jika diaktifkan, ✓ muncul di sebelah Diaktifkan.
- Jika dinonaktifkan, ✓ hilang dari sebelah Diaktifkan.

4.11.22

Mengaktifkan atau Menonaktifkan Audio Cerdas

Radio akan menyesuaikan volume audio secara otomatis untuk mengatasi derau latar belakang yang ada di lingkungan, termasuk sumber derau stasioner maupun non-stasioner. Ini adalah fitur hanya-terima dan tidak memengaruhi audio transmisi. Ikuti prosedur untuk mengaktifkan atau menonaktifkan Audio Cerdas di radio Anda.

PEMBERITAHUAN:
Fitur ini tidak tersedia saat sesi Bluetooth berlangsung.

1 Lakukan salah satu langkah berikut:

- Tekan tombol **Audio Cerdas** yang telah diprogram. Lompati langkah-langkah di bawah ini.
- Tekan OK untuk mengakses menu.

2 Tekan ▲ atau ▼ ke Utilitas. Tekan OK untuk memilih.

3 Tekan ▲ atau ▼ ke Pengaturan Radio.

Tekan OK untuk memilih.

4 Tekan ▲ atau ▼ ke Audio Cerdas. Tekan OK untuk memilih.

5 Lakukan salah satu langkah berikut:

- Tekan ▲ atau ▼ ke Aktif. Tekan OK untuk memilih. Layar menampilkan ✓ di sebelah Aktif.
- Tekan ▲ atau ▼ ke Nonaktif. Tekan OK untuk memilih. Layar menampilkan ✓ di sebelah Nonaktif.

4.11.23

Mengaktifkan atau Menonaktifkan Fitur Peredam Umpan Balik Akustik

Fitur ini membuat Anda dapat meminimalkan umpan balik akustik di panggilan yang diterima.

1 Tekan OK untuk mengakses menu.

2 Tekan ▲ atau ▼ ke Utilitas dan tekan OK untuk memilih.

3 Tekan ▲ atau ▼ ke Pengaturan Radio dan tekan OK untuk memilih.

4 Tekan ▲ atau ▼ ke Peredam AF dan tekan OK untuk memilih.

Anda juga bisa menggunakan tombol atau untuk mengubah opsi yang dipilih.

5 Lakukan salah satu dari langkah berikut.

- Tekan OK untuk mengaktifkan Peredam Umpan balik Akustik. Layar menampilkan ✓ di sebelah Diaktifkan.
- Tekan OK untuk menonaktifkan Peredam Umpan Balik Akustik. Tanda ✓ hilang dari sebelah Diaktifkan.

4.11.24

Mengaktifkan atau Menonaktifkan Peningkatan Trill

Anda dapat mengaktifkan fitur ini jika berbicara dalam bahasa yang memiliki banyak kata dengan bunyi getar ("R"). Ikuti prosedur untuk mengaktifkan atau menonaktifkan Peningkatan Trill di radio Anda.

1 Lakukan salah satu langkah berikut:

- Tekan tombol **Peningkatan Trill** terprogram. Lompati langkah-langkah di bawah ini.
- Tekan OK untuk mengakses menu.

2 Tekan ▲ atau ▼ ke `Utilitas`. Tekan OK untuk memilih.

3 Tekan ▲ atau ▼ ke `Pengaturan Radio`. Tekan OK untuk memilih.

4 Tekan ▲ atau ▼ ke `Peningkatan Trill`. Tekan OK untuk memilih.

5 Lakukan salah satu langkah berikut:

- Tekan ▲ atau ▼ ke `Aktif`. Tekan OK untuk memilih. Layar menampilkan ✓ di sebelah `Aktif`.
- Tekan ▲ atau ▼ ke `Nonaktif`. Tekan OK untuk memilih. Layar menampilkan ✓ di sebelah `Nonaktif`.

4.11.25

Ambien Audio

Anda dapat mengatur ambien audio sesuai dengan keadaan di sekitar.

Default

Ini adalah pengaturan default.

Keras

Pengaturan ini mengaktifkan Peredam Derau dan meningkatkan kekerasan speaker untuk penggunaan di lingkungan yang bising.

Grup Kerja

Pengaturan ini mengaktifkan Peredam AF dan menonaktifkan AGC ketika digunakan di dekat beberapa radio lain.

4.11.25.1

Mengatur Ambien Audio

Ikuti prosedur untuk mengatur ambien audio di radio Anda sesuai dengan lingkungan.

1 Tekan OK untuk mengakses menu.

2 Tekan ▲ atau ▼ ke `Utilitas`. Tekan OK untuk memilih.

3 Tekan ▲ atau ▼ ke `Pengaturan Radio`. Tekan OK untuk memilih.

4 Tekan ▲ atau ▼ ke `Ambien Audio`. Tekan OK untuk memilih.

5 Tekan ▲ atau ▼ ke pengaturan yang diinginkan. Tekan OK untuk memilih.

Pengaturannya adalah sebagai berikut.

- Pilih `Default` untuk pengaturan pabrik default.
- Pilih `Keras` untuk meningkatkan kekerasan volume speaker saat digunakan di lingkungan sekitar yang bising.
- Pilih `Grup Kerja` untuk mengurangi umpan balik akustik saat digunakan dengan sekelompok radio yang saling berdekatan.

Layar menampilkan ✓ di sebelah pengaturan yang dipilih.

4.11.26

Profil Audio

Anda dapat mengatur profil audio untuk radio sesuai dengan preferensi Anda.

Default
Ini adalah pengaturan default.

Tingkat 1, Tingkat 2, dan Tingkat 3
Pengaturan ini dimaksudkan sebagai kompensasi atas hilangnya pendengaran akibat derau yang lazim pada usia 40-an, 50-an, dan 60-an atau lebih.

Treble Boost, Mid Boost, dan Bass Boost
Pengaturan ini dimaksudkan untuk menghasilkan suara lebih kecil, suara lebih sengau, dan suara lebih dalam.

4.11.26.1

Mengatur Profil Audio

Ikuti prosedur untuk menentukan profil audio default di radio Anda.

1 Tekan OK untuk mengakses menu.

2 Tekan ▲ atau ▼ ke `Utilitas`. Tekan OK untuk memilih.

3 Tekan ▲ atau ▼ ke `Pengaturan Radio`. Tekan OK untuk memilih.

4 Tekan ▲ atau ▼ ke `Profil Audio`. Tekan OK untuk memilih.

5 Tekan ▲ atau ▼ ke pengaturan yang diinginkan. Tekan OK untuk memilih.

Pengaturannya adalah sebagai berikut.

- Pilih `Default` untuk menonaktifkan profil audio yang dipilih sebelumnya dan kembali ke pengaturan pabrik default.
- Pilih `Level 1`, `Level 2`, atau `Level 3` untuk profil audio yang ditujukan untuk mengompensasi berkurangnya daya dengar akibat kebisingan yang lazim ditemui pada orang dewasa berusia di atas 40 tahun.
- Pilih `Treble Boost`, `Mid Boost`, atau `Bass Boost` untuk profil audio yang selaras dengan preferensi Anda untuk suara yang lebih tipis, sengau, atau dalam.

Layar menampilkan ✓ di sebelah pengaturan yang dipilih.

4.11.27

Mengaktifkan atau Menonaktifkan Global Navigation Satellite System

Global Navigation Satellite System (GNSS) adalah sistem navigasi satelit yang menentukan lokasi radio dengan tepat. GNSS mencakup Global Positioning System (GPS) dan BeiDou Navigation Satellite System (BDS).

PEMBERITAHUAN:
Model radio tertentu mungkin menawarkan GPS dan BDS. Konstelasi GNSS dikonfigurasikan menggunakan CPS. Tanyakan kepada dealer atau administrator sistem Anda untuk mengetahui bagaimana radio Anda diprogram.

1

2 Lakukan salah satu langkah berikut untuk mengaktifkan atau menonaktifkan GNSS di radio.

- Tekan tombol **GNSS** terprogram.
- Tekan OK untuk mengakses menu. Lanjutkan ke langkah berikutnya.

3 Tekan ▲ atau ▼ ke `Utilitas`. Tekan OK untuk memilih.

4 Tekan ▲ atau ▼ ke `Pengaturan Radio`. Tekan OK untuk memilih.

5 Tekan ▲ atau ▼ ke `GNSS`. Tekan OK untuk memilih.

6 Tekan OK untuk mengaktifkan atau menonaktifkan GNSS.

Jika diaktifkan, ✓ muncul di sebelah `Diaktifkan`. Jika dinonaktifkan, ✓ hilang dari sebelah `Diaktifkan`.

4.11.28

Informasi Umum Radio

Radio Anda memuat informasi tentang berbagai parameter umum.

Informasi umum radio Anda adalah sebagai berikut:

- Alias dan ID radio.
- Versi Firmware dan Codeplug.
- Pembaruan perangkat lunak.
- Informasi GNSS.
- Informasi site.

PEMBERITAHUAN:

Tekan untuk kembali ke layar sebelumnya.

Tekan lama untuk kembali ke layar Awal. Radio keluar dari layar saat ini setelah pencatat waktu nonaktif berakhir.

4.11.28.1

Memeriksa Alias dan ID Radio

1 Lakukan salah satu langkah berikut:

- Tekan tombol **Alias dan ID Radio** yang telah diprogram. Lompati langkah-langkah berikut ini. Nada indikator positif akan berbunyi.

  Anda juga dapat menekan tombol **Alias dan ID Radio** yang terprogram untuk kembali ke layar sebelumnya.

- Tekan OK untuk mengakses menu.

2 Tekan atau ke `Utilitas`. Tekan OK untuk memilih.

3 Tekan atau ke `Info Radio`. Tekan OK untuk memilih.

4 Tekan atau ke `ID Saya`. Tekan OK untuk memilih.

Baris teks pertama menunjukkan alias radio. Baris teks kedua menampilkan ID radio.

4.11.28.2

Memeriksa Versi Firmware dan Codeplug

1 Tekan OK untuk mengakses menu.

2 Tekan ▲ atau ▼ ke `Utilitas`. Tekan OK untuk memilih.

3 Tekan ▲ atau ▼ ke `Info Radio`. Tekan OK untuk memilih.

4 Tekan ▲ atau ▼ ke `Versi`. Tekan OK untuk memilih.

Layar menampilkan versi firmware dan codeplug yang sekarang.

4.11.28.3

Memeriksa Informasi Pembaruan Perangkat Lunak

Fitur ini menampilkan tanggal dan waktu pembaruan perangkat lunak terakhir yang dilakukan melalui OTAP atau Wi-Fi. Ikuti prosedur untuk memeriksa informasi pembaruan perangkat lunak pada radio Anda.

1 Tekan OK untuk mengakses menu.

2 Tekan ▲ atau ▼ ke `Utilitas`. Tekan OK untuk memilih.

3 Tekan ▲ atau ▼ ke `Info Radio`. Tekan OK untuk memilih.

4 Tekan ▲ atau ▼ ke `Pembaruan Perangkat Lunak`. Tekan OK untuk memilih.

Layar menampilkan tanggal dan waktu pembaruan perangkat lunak terbaru.

Menu Pembaruan Perangkat Lunak hanya tersedia setelah setidaknya satu sesi OTAP atau Wi-Fi yang berhasil. Lihat Pemrograman Melalui Udara di halaman 517 untuk informasi selengkapnya.

4.11.28.4

Memeriksa Informasi GNSS

Menampilkan informasi GNSS di radio, misalnya nilai:

- Garis Lintang
- Garis Bujur

- Ketinggian
- Arah
- Kecepatan
- HDOP (Penipisan Ketepatan secara Horizontal)
- Satelit
- Versi

1 Tekan OK untuk mengakses menu.

2 Tekan ▲ atau ▼ ke `Utilitas`. Tekan OK untuk memilih.

3 Tekan ▲ atau ▼ ke `Info Radio`. Tekan OK untuk memilih.

4 Tekan ▲ atau ▼ ke `Info GNSS`. Tekan OK untuk memilih.

5 Tekan ▲ atau ▼ ke item yang diperlukan.

Tekan OK untuk memilih. Informasi GNSS yang diminta akan ditampilkan di layar.

4.11.28.5

Menampilkan Informasi Site

Ikuti prosedur untuk menampilkan nama site tempat radio Anda berada saat ini.

1 Tekan OK untuk mengakses menu.

2 Tekan ▲ atau ▼ ke `Utilitas`. Tekan OK untuk memilih.

3 Tekan ▲ atau ▼ ke `Info Radio`. Tekan OK untuk memilih.

4 Tekan ▲ atau ▼ ke `Info Site`. Tekan OK untuk memilih.

Nama site saat ini akan ditampilkan di layar.

4.11.29

Melihat Detail Sertifikat Wi-Fi Enterprise

Anda bisa melihat detail Sertifikat Wi-Fi Enterprise terpilih.

1. Tekan OK untuk mengakses menu.
2. Tekan ▲ atau ▼ ke `Utilitas`.Tekan OK untuk memilih.
3. Tekan ▲ atau ▼ ke `Menu Sertifikat`.

   Tekan OK untuk memilih.

   ✓ tampak di samping sertifikat yang siap.
4. Tekan ▲ atau ▼ ke sertifikat yang diinginkan.

   Tekan OK untuk memilih.

Radio Anda menampilkan detail lengkap dari sertifikat.

PEMBERITAHUAN:
Untuk sertifikat yang belum siap, layar hanya menampilkan Status.

Connect Plus

Connect Plus adalah solusi trunking penuh berdasarkan teknologi DMR. Connect Plus menggunakan saluran kontrol tersendiri untuk permintaan dan pengalokasian saluran.

5.1

Kontrol Radio Tambahan dalam Mode Connect Plus

Bab ini menjelaskan kontrol radio tambahan yang tersedia untuk pengguna radio melalui alat terprogram seperti tombol yang dapat diprogram dan fungsi radio yang dapat ditetapkan.

5.1.1

Tombol Tekan untuk Berbicara (Push-to-Talk/PTT)

Tombol **PTT** di sisi radio menjalankan dua tujuan dasar:

- Ketika panggilan sedang berlangsung, tombol **PTT** memungkinkan radio melakukan transmisi ke radio lainnya dalam panggilan tersebut.

  Tekan dan tahan tombol **PTT** untuk berbicara. Lepaskan tombol **PTT** untuk mendengarkan.

  Mikrofon aktif jika tombol **PTT** ditekan.

- Ketika panggilan tidak sedang berlangsung, tombol **PTT** digunakan untuk melakukan panggilan baru (lihat Melakukan Panggilan Radio di halaman 262).

Jika Nada Izin Bicara diaktifkan, tunggu hingga nada peringatan singkat berakhir sebelum berbicara.

5.1.2

Tombol yang Dapat Diprogram

Dealer Anda dapat memprogram tombol dapat diprogram sebagai pintasan ke fungsi-fungsi radio bergantung pada durasi penekanan tombol:

Tekan sebentar

Menekan dan melepas dengan cepat.

Tekan lama
Menekan dan menahan selama durasi terprogram.

PEMBERITAHUAN:
Durasi yang sudah diprogram untuk sebuah penekanan tombol berlaku bagi semua fungsi radio/utilitas atau pengaturan yang dapat ditetapkan. Lihat Pengoperasian Darurat di halaman 300 untuk informasi selengkapnya tentang durasi terprogram untuk tombol *Darurat*.

5.1.2.1

Fungsi Radio yang Dapat Ditetapkan

Sakelar Audio Bluetooth®
Mengalihkan perutean audio antara speaker radio internal dan aksesori berkemampuan Bluetooth eksternal.

Hubungkan Bluetooth
Menginisiasi operasi pencarian dan sambungan Bluetooth.

Putus Sambungan Bluetooth
Menghentikan semua sambungan Bluetooth yang ada antara radio dan perangkat berkemampuan Bluetooth.

Bluetooth Dapat Ditemukan
Memungkinkan radio memasuki Mode Bluetooth Dapat Ditemukan.

Pembatalan Antrean Sibuk
Keluar dari mode sibuk ketika panggilan non-Darurat dalam Antrean Sibuk dimulai. Panggilan Darurat, setelah diterima dalam Antrean Sibuk, tidak dapat dibatalkan.

Log Panggilan
Memilih daftar log panggilan.

Pengumuman Saluran
Memutar pesan suara pengumuman zona dan saluran untuk saluran saat ini.

Kontak
Memberikan akses langsung ke daftar Kontak.

Darurat Aktif/Nonaktif
Menginisiasi atau membatalkan status darurat, tergantung pemrogramannya.

Klakson/Lampu
Mengaktifkan atau menonaktifkan fitur klakson dan lampu.

Lokasi Dalam Ruangan
Mengaktifkan atau menonaktifkan Lokasi Dalam Ruangan.

Audio Cerdas
Mengaktifkan atau menonaktifkan audio cerdas.

Panggilan Manual
Menginisiasi Panggilan Privat atau Telepon dengan memasukkan ID subscriber atau nomor telepon, tergantung pemrogramannya.

Akses Satu Sentuhan
Langsung memulai Panggilan Pribadi yang telah ditentukan, Peringatan Panggilan, pesan Teks Cepat, atau Balik Depan.

Privasi
Mengaktifkan atau menonaktifkan privasi.

Pemeriksaan Radio
Menentukan apakah radio aktif dalam sistem.

Pengaktifan Radio
Memungkinkan radio target diaktifkan dari jauh.

Penonaktifan Radio
Memungkinkan radio target dinonaktifkan dari jauh.

Monitor Jarak Jauh
Mengaktifkan mikrofon radio target tanpa indikator apa pun.

Atur Ulang Saluran Home
Menyiapkan saluran home baru.

Jenis Tanda Dering
Memberikan akses langsung ke Pengaturan Jenis Tanda Dering.

Permintaan Jelajah
Meminta pencarian site berbeda.

Pemindaian
Mengaktifkan atau menonaktifkan pemindaian.

Senyapkan Pengingat Saluran Home
Mematikan suara Pengingat Saluran Home.

Kunci Site Aktif/Nonaktif
Ketika diaktifkan, radio akan mencari site saat ini saja. Ketika dinonaktifkan, radio akan mencari site lain di samping site saat ini.

Pesan Teks
Memilih menu pesan teks.

Pengumuman Suara Aktif/Nonaktif
Mengaktifkan atau menonaktifkan pengumuman suara.

Wi-Fi
Mengaktifkan atau menonaktifkan Wi-Fi.

Zona
Memungkinkan pemilihan dari daftar zona.

5.1.2.2

Fungsi Utilitas atau Pengaturan yang Dapat Ditetapkan

Peredam AF
Mengaktifkan atau menonaktifkan fitur Peredam Umpan Balik Akustik.

Semua Nada/Peringatan
Mengaktifkan atau menonaktifkan semua nada dan peringatan.

Kecerahan Lampu Latar
Mengatur tingkat kecerahan.

Saluran Naik/Turun
Tergantung pemrogramannya, mengubah saluran ke saluran sebelumnya atau berikutnya.

Mode Tampilan
Mengaktifkan atau menonaktifkan mode tampilan siang/malam hari.

Global Navigation Satellite System (GNSS)
Mengaktifkan atau menonaktifkan sistem navigasi satelit.

Tingkat Daya
Mengganti antara tingkat kekuatan transmisi tinggi dan rendah.

Tidak Ditetapkan
Menunjukkan bahwa fungsi tombol belum ditetapkan.

5.1.3

Mengidentifikasi Indikator Status dalam Mode Connect Plus

5.1.3.1

Ikon Layar

Berikut ini adalah ikon-ikon yang terdapat di layar radio.

	Indikator Kekuatan Sinyal yang Diterima (Received Signal Strength Indicator/RSSI) Jumlah baris yang ditampilkan menunjukkan kekuatan sinyal radio. Empat baris menunjukkan sinyal terkuat. Ikon ini hanya ditampilkan saat menerima.
	Bluetooth Tidak Tersambung

	Fitur Bluetooth diaktifkan, tetapi tidak ada perangkat Bluetooth jauh yang tersambung.
	Bluetooth Tersambung Fitur Bluetooth diaktifkan. Ikon akan menyala bila perangkat Bluetooth jauh tersambung.
	Data Volume Tinggi Radio menerima data volume tinggi dan saluran sedang sibuk.
	Lokasi Dalam Ruangan Tersedia [4] Status lokasi dalam ruangan aktif dan tersedia.
	Lokasi Dalam Ruangan Tidak Tersedia [4] Status lokasi dalam ruangan aktif tetapi tidak tersedia karena Bluetooth dinonaktifkan atau Beacons Scan dihentikan oleh Bluetooth.

	Mode Bisu Mode Bisu aktif dan speaker dibisukan.
	Notifikasi Daftar Notifikasi berisi item untuk diperiksa.
L atau H	**Tingkat Daya** Radio diatur pada daya Rendah atau Radio diatur pada daya Tinggi.
	Nada Nonaktif Nada dinonaktifkan.
	Papan Opsi Papan Opsi diaktifkan.
	Papan Opsi Tidak Berfungsi Papan Opsi dinonaktifkan.
	GNSS Tersedia

[4] Hanya berlaku untuk model dengan perangkat lunak dan perangkat keras terbaru

	Fitur GPS/GNSS diaktifkan. Ikon akan terus menyala bila posisi tetap telah tersedia.
	GNSS Tidak Tersedia/Di Luar Jangkauan Fitur GPS/GNSS telah diaktifkan, tetapi tidak menerima data dari satelit.
	BeiDou Only Tersedia [5] Fitur BeiDou Only diaktifkan. Ikon akan terus menyala bila posisi tetap telah tersedia.
	Pemindaian Fitur Pindai diaktifkan.
	Darurat Radio dalam mode Darurat.
	Aman Fitur Privasi diaktifkan.

	Tidak Aman Fitur Privasi dinonaktifkan.
	Jelajah Site Fitur jelajah site diaktifkan.
	Kontak Kontak radio tersedia.
	Log Panggilan Log panggilan radio.
	Pesan Pesan masuk.
	Hanya Dering Mode dering diaktifkan.
	Dering Tanpa Bunyi Mode dering tanpa bunyi diaktifkan.
	Getar Mode getar diaktifkan.

[5] Hanya berlaku untuk XiR M8660i/XiR M8668i/CM7668i

	Getar dan Dering Mode Getar dan Dering diaktifkan.
	Wi-Fi Sangat Baik [6] Sinyal Wi-Fi sangat baik.
	Wi-Fi Baik [6] Sinyal Wi-Fi baik.
	Wi-Fi Cukup [6] Sinyal Wi-Fi cukup.
	Wi-Fi Jelek [6] Sinyal Wi-Fi jelek.
	Wi-Fi Tidak Tersedia [6] Sinyal Wi-Fi tidak tersedia.

5.1.3.2

Ikon Panggilan

Ikon berikut muncul di layar radio Anda selama panggilan. Ikon ini juga muncul di daftar Kontak untuk menunjukkan jenis ID.

	Panggilan Pribadi Menunjukkan Panggilan Pribadi sedang berlangsung. Di Daftar Kontak, ini menunjukkan alias (nama) atau ID (nomor) subscriber.
	Panggilan Grup/Site All Call Menunjukkan Panggilan Grup atau Site All Call sedang berlangsung. Dalam daftar Kontak, ini ditunjukkan sebagai alias (nama) atau ID (nomor) grup.
	Panggilan Telepon sebagai Panggilan Pribadi Menunjukkan Panggilan Telepon sebagai Panggilan Pribadi sedang berlangsung.

[6] Hanya berlaku untuk XiR M8668i/CM7668i

	Panggilan PC Bluetooth Menunjukkan Panggilan PC Bluetooth sedang berlangsung. Dalam daftar Kontak, ini ditunjukkan sebagai alias (nama) atau ID (nomor) Panggilan PC Bluetooth.
	Panggilan Pengiriman Jenis kontak Panggilan Pengiriman digunakan untuk mengirim pesan teks ke PC pengirim melalui Server Pesan Teks pihak ketiga.

5.1.3.3

Ikon Menu Lanjutan

Ikon berikut ini muncul di samping item menu yang menawarkan pilihan di antara dua opsi atau sebagai indikasi bahwa ada sub-menu yang menawarkan dua opsi.

	Kotak Centang (Kosong) Menunjukkan opsi tidak dipilih.
	Kotak Centang (Dicentang) Menunjukkan opsi dipilih.
	Kotak Hitam Penuh Menunjukkan opsi dipilih untuk item menu dengan submenu.

5.1.3.4

Ikon Item Terkirim

Ikon berikut muncul di sudut kanan atas layar radio dalam folder Item Terkirim.

ATAU	**Berhasil Terkirim** Pesan teks berhasil terkirim.
ATA	**Sedang Berlangsung**

U	• Pesan teks ke alias atau ID grup sedang menunggu transmisi. • Pesan teks ke alias atau ID subscriber sedang menunggu transmisi, diikuti dengan menunggu respons.
	Pesan Terpisah atau Grup Telah Dibaca Pesan teks telah dibaca.
ATA U	
ATA U	**Pesan Terpisah atau Grup Belum Dibaca** Pesan teks belum dibaca.
ATA U	**Gagal Terkirim** Pesan teks belum dikirim.

5.1.3.5

Ikon Perangkat Bluetooth

Ikon berikut juga ditampilkan di sebelah item dalam daftar perangkat berkemampuan Bluetooth yang tersedia untuk menunjukkan jenis perangkat.

	Perangkat Data Bluetooth Perangkat data berkemampuan Bluetooth, misalnya scanner.
	Perangkat Audio Bluetooth Perangkat audio berkemampuan Bluetooth, misalnya headset.
	Perangkat PTT Bluetooth Perangkat PTT berkemampuan Bluetooth, misalnya POD (PTT-Only Device).
	Perangkat Sensor Bluetooth Perangkat sensor yang diaktifkan Bluetooth, seperti sensor gas.

5.1.3.6

Indikator LED

Indikator LED menunjukkan status operasional radio.

Merah berkedip	Radio sedang melakukan transmisi pada kondisi baterai lemah, menerima transmisi darurat atau gagal dalam uji mandiri setelah dinyalakan, atau telah berpindah di luar jangkauan jika radio dikonfigurasi dengan Sistem Transponder Auto-Range. Mode Bisu aktif.
Merah berkedip cepat	Radio menerima transfer file lewat udara (file firmware Papan Opsi, file Frekuensi Jaringan, atau file Codeplug Papan Opsi), atau sedang dalam pemutakhiran ke file firmware Papan Opsi yang baru.
Berkedip hijau dan kuning	Radio menerima Peringatan Panggilan, menerima pesan teks atau Pemindaian diaktifkan dan sedang menerima aktivitas.
Kuning terus	Radio dalam Mode Bluetooth Dapat Ditemukan.
Berkedip ganda kuning	Radio secara aktif mencari site baru.
Berkedip kuning	Radio sedang menerima Peringatan Panggilan atau Pemindaian diaktifkan dan sedang siaga (tidak diaktifkan untuk aktivitas).
Hijau tak berkedip	Radio sedang menyala atau melakukan transmisi.
Berkedip hijau	Radio sedang menyala, menerima panggilan atau data.
Hijau berkedip Dua Kali	Radio menerima panggilan dengan privasi diaktifkan.

5.1.3.7

Nada Indikator

Berikut ini adalah nada yang keluar melalui speaker radio.

Nada tinggi	□	Nada rendah	■

Nada indikator memberi petunjuk suara tentang status setelah suatu tindakan untuk menjalankan tugas dilakukan.

	Nada Indikator Positif
	Nada Indikator Negatif

5.1.3.8

Nada Peringatan

Nada peringatan memberi Anda indikasi status radio yang bisa didengar atau respons radio terhadap data yang diterima.

Nada Terus Menerus	Nada monoton. Berbunyi secara terus-menerus sampai dihentikan.
Nada Berkala	Berbunyi secara berkala bergantung pada durasi yang diatur oleh radio. Nada memulai, berhenti, dan mengulang sendiri.
Nada Berulang	Nada tunggal yang berulang dengan sendirinya sampai dihentikan oleh pengguna.
Nada Sesaat	Berbunyi hanya sekali selama periode singkat yang ditentukan oleh radio.

5.1.4

Beralih Antara Mode Connect Plus dan Non-Connect Plus

Untuk beralih ke mode non-Connect Plus, Anda harus pindah ke zona lain, jika diprogram oleh dealer atau administrator sistem Anda. Tanyakan kepada dealer atau administrator sistem Anda untuk mengetahui apakah radio Anda telah diprogram dengan zona non-Connect Plus, dan fitur apa yang tersedia saat beroperasi di zona non-Connect Plus.

5.2

Melakukan dan Menerima Panggilan dalam Mode Connect Plus

Bagian ini menjelaskan operasi dan fitur panggilan radio secara umum yang tersedia di radio Anda.

5.2.1

Memilih Site

Site menyediakan jangkauan untuk area spesifik. Site Connect Plus memiliki sebuah pengontrol site dan maksimal 15 repeater. Dalam jaringan multisite, radio Connect Plus akan otomatis mencari site baru ketika tingkat sinyal dari site saat ini turun ke tingkat yang tak bisa diterima.

5.2.1.1

Permintaan Jelajah

Permintaan Jelajah memberi tahu radio untuk mencari site yang berbeda, meski sinyal dari site saat ini dapat diterima.

Jika tidak ada site yang tersedia:

- Radio menampilkan `Mencari` dan `Alias Saluran yang Dipilih` dan melanjutkan pencarian ke seluruh daftar site.
- Radio akan kembali ke site sebelumnya, jika site sebelumnya masih tersedia.

PEMBERITAHUAN:
Hal ini diprogram oleh dealer Anda.

Tekan tombol **Permintaan Jelajah** yang terprogram.

Anda mendengar nada, yang menunjukkan radio telah beralih ke site baru. Layar menampilkan `ID Site <Nomor Site>`.

5.2.1.2

Kunci Site Aktif/Nonaktif

Ketika diaktifkan, radio akan mencari site saat ini saja. Ketika dinonaktifkan, radio akan mencari site lain di samping site saat ini.

Tekan tombol **Kunci Site**.

Jika fungsi **Kunci Site** diaktifkan:

- Anda mendengar nada indikator positif, yang menunjukkan radio telah dikunci ke site saat ini.
- Layar akan menampilkan `Site Terkunci.`

Jika fungsi **Kunci Site** dinonaktifkan:

- Anda mendengar nada indikator negatif, menandakan bahwa radio tidak terkunci.
- Layar akan menampilkan `Site Tidak Terkunci.`

5.2.1.3

Batasan Site

Administrator sistem radio Connect Plus Anda memiliki kemampuan untuk menentukan site jaringan mana yang boleh dan tidak boleh digunakan radio Anda. Radio Anda tidak perlu diprogram ulang untuk mengubah daftar site yang dibolehkan dan tidak dibolehkan. Jika radio Anda mencoba mendaftar ke site yang tidak diperbolehkan, Anda akan melihat pesan singkat berbunyi: `Nomor <site yang diberikan> Tidak Diizinkan`. Radio kemudian mencari site jaringan yang berbeda.

5.2.2

Memilih Zona

Radio dapat diprogram dengan maksimum 16 Zona Connect Plus dan setiap zona Connect Plus berisi maksimum 16 posisi yang dapat ditetapkan pada Kenop Pemilih Saluran.

Setiap posisi kenop yang dapat ditetapkan dapat digunakan untuk memulai salah satu jenis panggilan suara berikut:

- Panggilan Grup
- Panggilan Multi-grup
- Semua Panggilan Site
- Panggilan Pribadi

1 Akses fitur Zona dengan melakukan yang berikut:

Kontrol Radio	Langkah
Tombol Pemilihan Zona terprogram	Tekan tombol **Pemilihan Zona** terprogram.

Kontrol Radio	Langkah
Menu radio	**a** Tekan OK untuk mengakses menu. **b** Tekan ▲ atau ▼ ke Zona dan tekan OK untuk memilih.

Zona saat ini ditampilkan dan ditandai dengan ✓.

2 Pilih zona yang diinginkan.

Kontrol Radio	Langkah
▲ **atau** ▼	Tekan ▲ atau ▼ dan gulir ke zona yang diinginkan.

3 Tekan OK untuk memilih.

Layar sesaat menampilkan pesan <Zona> Terpilih dan kembali ke layar zona yang dipilih.

5.2.3

Menggunakan Beberapa Jaringan

Jika radio Anda telah diprogram untuk menggunakan beberapa jaringan Connect Plus, Anda dapat memilih jaringan yang berbeda dengan beralih ke zona Connect Plus yang ditetapkan ke jaringan yang diinginkan. Penetapan jaringan-ke-zona ini dikonfigurasi oleh dealer Anda melalui pemrograman radio.

5.2.4

Memilih Jenis Panggilan

Gunakan Kenop Pemilih Saluran untuk memilih jenis panggilan. Ini adalah Panggilan Grup, Panggilan Multi-grup, Semua Panggilan atau Panggilan Pribadi, bergantung pada pemrograman radio Anda. Jika Anda ubah Kenop Pemilih Saluran ke posisi yang berbeda (yang memiliki jenis panggilan yang telah ditetapkan), ini menyebabkan radio untuk mendaftar ulang ke site Connect Plus. Radio akan mendaftar dengan ID Grup Registrasi yang telah diprogram untuk posisi Kenop Pemilih Saluran jenis panggilan baru.

Jika Anda memilih posisi yang tidak memiliki penetapan jenis panggilan, radio akan membunyikan nada berkelanjutan dan layar akan menampilkan Tidak

`Terprogram`. Radio Anda tidak beroperasi ketika dipilih ke saluran yang tidak diprogram, gunakan Kenop Pemilih Saluran untuk memilih saluran yang telah diprogram.

Setelah zona yang diinginkan ditampilkan (jika Anda memiliki beberapa zona di radio), putar Kenop Pemilih Saluran terprogram untuk memilih jenis panggilan.

5.2.5

Menerima dan Menjawab Panggilan Radio

Setelah saluran, ID subscriber, atau tipe panggilan ditampilkan, Anda dapat menerima dan merespons panggilan.

Lampu LED menyala hijau terus ketika radio sedang mengirimkan transmisi dan berkedip ketika radio sedang menerima.

PEMBERITAHUAN:
Lampu LED menyala hijau terus ketika radio sedang mengirimkan transmisi dan berkedip ganda saat radio menerima panggilan dengan privasi diaktifkan. Untuk menguraikan panggilan dengan privasi aktif, radio harus memiliki Kunci Privasi, atau Nilai Kunci dan ID Kunci yang sama (diprogram oleh dealer) seperti radio yang melakukan transmisi (radio yang mengirimkan panggilan kepada Anda).

Lihat Privasi di halaman 319 untuk informasi selengkapnya.

5.2.5.1

Menerima dan Menjawab Panggilan Grup

Untuk menerima panggilan dari sebuah grup, radio Anda harus dikonfigurasi sebagai bagian dari grup itu.

Jika Anda menerima Panggilan Grup (ketika di Layar Awal), LED berkedip hijau.Ikon Panggilan Grup muncul di sudut kanan atas. Baris teks pertama menampilkan alias pemanggil. Baris teks kedua menunjukkan alias panggilan

grup. Radio Anda bersuara lagi dan panggilan masuk terdengar melalui speaker radio.

1 Pegang mikrofon 1 sampai 2 inci (2,5 sampai 5,0 cm) dari mulut Anda.

   Lampu LED menyala hijau tak berkedip.

2 Tunggu hingga salah satu dari Nada Izin Bicara selesai (jika diaktifkan) dan bicaralah dengan jelas ke mikrofon.

3 Lepaskan tombol **PTT** untuk mendengarkan.

   Jika tidak ada aktivitas suara selama jangka waktu yang telah ditentukan, panggilan akan berakhir.

PEMBERITAHUAN:
Lihat Melakukan Panggilan Grup di halaman 263 untuk detail tentang melakukan Panggilan Grup.

5.2.5.2

Menerima dan Menjawab Panggilan Pribadi

Panggilan Pribadi adalah sebuah panggilan dari radio perorangan ke radio perorangan lainnya.

Saat Anda menerima Panggilan Pribadi, LED akan berkedip hijau. Baris pertama layar menampilkan alias atau ID subscriber, dan ikon RSSI. Baris kedua menampilkan `Panggilan Pribadi` dan ikon Panggilan Pribadi. Radio bersuara dan panggilan masuk berbunyi melalui speaker radio.

1 Pegang mikrofon 1 sampai 2 inci (2,5 sampai 5,0 cm) dari mulut Anda.

2 Tekan tombol **PTT** untuk menjawab panggilan.

   Lampu LED menyala hijau tak berkedip.

3 Tunggu hingga Nada Izin Bicara selesai (jika diaktifkan), dan bicaralah dengan jelas ke mikrofon.

4 Lepaskan tombol **PTT** untuk mendengarkan.

Jika tidak ada aktivitas suara selama jangka waktu yang telah ditentukan, panggilan akan berakhir.

Layar menampilkan pesan `Panggilan Diakhiri.`

Lihat Melakukan Panggilan Pribadi di halaman 264 untuk detail tentang melakukan Panggilan Pribadi.

5.2.5.3

Menerima Semua Panggilan Site

Semua Panggilan Site adalah panggilan dari sebuah radio ke semua radio yang ada site tersebut. Panggilan ini digunakan untuk membuat pengumuman penting yang memerlukan perhatian penuh dari pengguna.

Ketika Anda menerima Semua Panggilan Site, nada akan berbunyi dan LED berkedip hijau.

Ikon Panggilan Grup muncul di sudut kanan atas. Baris teks pertama menampilkan alias pemanggil. Baris teks kedua menampilkan `Semua Panggilan Site`. Radio Anda bersuara lagi dan panggilan masuk terdengar melalui speaker radio.

Setelah Semua Panggilan Site berakhir, radio akan kembali ke layar sebelumnya sebelum menerima panggilan. Sebuah Semua Panggilan tidak menunggu selama periode waktu yang ditentukan sebelumnya sebelum berakhir.

Anda tidak dapat merespons Semua Panggilan Site.

PEMBERITAHUAN:
Lihat Melakukan Semua Panggilan Site di halaman 265 untuk informasi lengkap tentang melakukan Semua Panggilan Site.

Radio berhenti menerima Semua Panggilan Site tersebut jika Anda beralih ke saluran lain ketika menerima panggilan tersebut. Selama Semua Panggilan Site, Anda tidak akan bisa menggunakan semua fungsi tombol yang terprogram sampai panggilan tersebut berakhir.

5.2.5.4

Menerima Panggilan Telepon Pribadi Inbound

Ketika Anda menerima Panggilan Telepon Pribadi Inbound, ikon Panggilan Telepon sebagai Panggilan Pribadi muncul di sudut kanan atas. Baris pertama teks menampilkan `Panggilan Telepon`.

1. Tekan dan tahan tombol **PTT** untuk menjawab dan berbicara. Lepaskan tombol **PTT** untuk mendengarkan.

2 Tekan lama untuk mengakhiri panggilan.

Baris pertama layar menampilkan `Mengakhiri`. Baris kedua layar menampilkan `Panggilan Telepon...`. Tampilan akan kembali ke layar Panggilan Telepon.
Layar menampilkan pesan `Panggilan Telepon Diakhiri`.

5.2.5.4.1

Melakukan Buffered Over-Dial dalam Panggilan Pribadi Telepon Inbound

Selama panggilan, ikon Panggilan Telepon sebagai Panggilan Pribadi muncul di sudut kanan atas. Baris pertama layar menampilkan `Panggilan Telepon`.

1 Gunakan keypad untuk memasukkan digit dan tekan tombol OK .

Tekan diikuti dalam 2 detik untuk menyisipkan jeda. `P` menggantikan ∗ dan ♯ pada layar.

Ikon Panggilan Telepon sebagai Panggilan Pribadi muncul di sudut kanan atas. Baris pertama layar menampilkan digit yang dimasukkan.

2 Tekan lama untuk mengakhiri panggilan.

Baris pertama layar menampilkan `Mengakhiri`. Baris kedua layar menampilkan `Panggilan Telepon...`. Tampilan akan kembali ke layar Panggilan Telepon.

Layar menampilkan pesan `Panggilan Telepon Diakhiri`.

5.2.5.4.2

Melakukan Live Over-Dial dalam Panggilan Pribadi Telepon Inbound

Selama panggilan, ikon Panggilan Telepon sebagai Panggilan Pribadi muncul di sudut kanan atas. Baris pertama layar menampilkan `Panggilan Telepon`.

1 Tekan tombol **PTT** dan gunakan keypad untuk memasukkan digit.

Ikon Panggilan Telepon sebagai Panggilan Pribadi muncul di sudut kanan atas. Baris pertama teks pada layar menunjukkan digit Live Dial.

2 Tekan lama untuk mengakhiri panggilan.

Baris pertama layar menampilkan `Mengakhiri`. Baris kedua layar menampilkan `Panggilan Telepon...`. Tampilan akan kembali ke layar Panggilan Telepon.

Layar menampilkan pesan `Panggilan Telepon Diakhiri`.

5.2.5.5

Menerima Panggilan Telepon Grup Bicara Inbound

Jika Anda menerima Panggilan Telepon Grup Bicara Inbound, ikon Panggilan Grup di sudut kanan atas muncul. Baris teks pertama akan menampilkan `Memanggil1`.

Tekan tombol **PTT** untuk berbicara dan lepaskan untuk mendengarkan.

5.2.5.6

Panggilan Telepon Multi-grup Inbound

Ketika Anda menerima Panggilan Telepon Multi-Grup Inbound, ikon Panggilan Grup muncul di sudut kanan atas. Baris pertama teks menampilkan `Panggilan Multi-grup`. Radio bersuara dan panggilan multi-grup yang masuk berbunyi melalui speaker radio.

5.2.6

Melakukan Panggilan Radio

Setelah memilih saluran, Anda dapat memilih alias atau ID subscriber, atau alias atau ID grup menggunakan:

- Kenop Pemilih Saluran.
- Tombol **Akses Satu Sentuhan** terprogram – Fitur Akses Satu Sentuhan memungkinkan Anda membuat Panggilan Pribadi ke ID yang telah ditentukan sebelumnya dengan mudah. Fitur ini dapat ditetapkan untuk tombol yang dapat diprogram dengan menekan singkat atau lama. Anda hanya dapat memiliki satu ID yang ditentukan ke tombol **Akses Satu Sentuhan**. Radio Anda bisa mempunyai beberapa tombol **Akses Satu Sentuhan** terprogram.
- Daftar Kontak (lihat Pengaturan Kontak di halaman 287).

PEMBERITAHUAN:
Fitur Privasi radio Anda harus sudah diaktifkan pada saluran tersebut untuk mengirim transmisi dengan privasi diaktifkan. Hanya radio target dengan Nilai Kunci dan ID Kunci yang sama dengan radio Anda yang dapat mengurai transmisi.

Lihat Privasi di halaman 319 untuk informasi selengkapnya.

5.2.6.1

Melakukan Panggilan dengan Kenop Pemilih Saluran

Fitur ini memungkinkan pengguna radio melakukan jenis panggilan yang berbeda: Panggilan Grup, Panggilan Pribadi, Semua Panggilan Site, Panggilan Multi-Grup.

5.2.6.1.1

Melakukan Panggilan Grup

Untuk melakukan panggilan ke sebuah grup pengguna, radio Anda harus dikonfigurasi sebagai bagian dari grup itu.

1. Pilih saluran dengan alias atau ID grup aktif. Lihat Memilih Jenis Panggilan di halaman 257 .
2. Pegang mikrofon 1 sampai 2 inci (2,5 sampai 5,0 cm) dari mulut Anda.
3. Tekan tombol **PTT** untuk melakukan panggilan.

   LED menyala hijau tak berkedip. Ikon Panggilan Grup muncul di sudut kanan atas. Baris teks pertama memperlihatkan alias panggilan grup.

4 Tunggu hingga Nada Izin Bicara selesai (jika diaktifkan), dan bicaralah dengan jelas ke mikrofon.

5 Lepaskan tombol **PTT** untuk mendengarkan.

Bila radio target merespons, LED akan berkedip hijau, suara radio akan diaktifkan, dan respons akan berbunyi melalui speaker radio. Anda melihat ikon Panggilan Grup, alias atau ID grup, dan alias atau ID transmisi radio pada layar Anda.

Jika tidak ada aktivitas suara selama jangka waktu yang telah ditentukan, panggilan akan berakhir. Radio kembali ke layar sebelum Anda melakukan panggilan.

5.2.6.1.2

Melakukan Panggilan Pribadi

Meskipun Anda dapat menerima dan/atau merespons Panggilan Pribadi yang dibuat melalui radio individual yang diotorisasi, tetapi radio Anda harus diprogram untuk memulai Panggilan Pribadi.

Anda akan mendengar nada indikator negatif apabila melakukan Panggilan Pribadi menggunakan tombol **Akses Satu Sentuhan**, atau Kenop Pemilih Saluran, jika fitur ini tidak diaktifkan.

1 Lakukan salah satu dari langkah berikut.

- Pilihlah saluran dengan alias atau ID subscriber yang aktif. Lihat Memilih Jenis Panggilan di halaman 257 .
- Tekan tombol **Akses Satu Sentuhan** terprogram.

2 Pegang mikrofon 1 sampai 2 inci (2,5 sampai 5,0 cm) dari mulut Anda.

3 Tekan tombol **PTT** untuk melakukan panggilan.

Lampu LED menyala hijau tak berkedip. Ikon Panggilan Pribadi akan ditampilkan di sudut kanan atas. Baris teks pertama menunjukkan alias subscriber target. Baris teks kedua menampilkan status panggilan.

4 Tunggu hingga Nada Izin Bicara selesai (jika diaktifkan), dan bicaralah dengan jelas ke mikrofon.

5 Lepaskan tombol **PTT** untuk mendengarkan.

Bila radio target merespons, LED akan berkedip hijau.

Jika tidak ada aktivitas suara selama jangka waktu yang telah ditentukan, panggilan akan berakhir.

Anda akan mendengar nada pendek. Layar menampilkan pesan `Panggilan Diakhiri.`

Radio mungkin telah diprogram untuk melakukan pemeriksaan kehadiran radio sebelum mengonfigurasi Panggilan Pribadi. Jika radio target tidak tersedia, nada singkat akan berbunyi dan pemberitahuan singkat negatif akan ditampilkan.

5.2.6.1.3

Melakukan Semua Panggilan Site

Fitur ini memungkinkan Anda untuk melakukan transmisi ke semua pengguna pada site yang saat ini tidak melakukan panggilan lain. Radio harus diprogram agar Anda bisa menggunakan fitur ini.

Pengguna pada saluran/site ini tidak bisa menjawab Semua Panggilan Site.

1. Pilih saluran dengan alias grup Semua Panggilan Site aktif. Lihat Memilih Jenis Panggilan di halaman 257 .
2. Pegang mikrofon 1 sampai 2 inci (2,5 sampai 5,0 cm) dari mulut Anda.
3. Tekan tombol **PTT** untuk melakukan panggilan.

   Lampu LED menyala hijau tak berkedip. Ikon Panggilan Grup muncul di sudut kanan atas. Baris teks pertama menampilkan `Semua Panggilan Site.`
4. Tunggu hingga Nada Izin Bicara selesai (jika diaktifkan), dan bicaralah dengan jelas ke mikrofon.

5.2.6.1.4

Melakukan Panggilan Multi-grup

Fitur ini memungkinkan Anda melakukan transmisi ke semua pengguna pada beberapa grup. Radio harus diprogram agar Anda bisa menggunakan fitur ini.

PEMBERITAHUAN:
Pengguna di grup tidak dapat merespons Panggilan Multi-grup.

1. Putar Kenop Pemilih Saluran untuk memilih alias atau ID Multi-grup.

2 Tekan tombol **PTT** untuk melakukan panggilan.

Lampu LED menyala hijau tak berkedip. Layar menampilkan alias atau ID Multi-grup.

Tunggu hingga Nada Izin Bicara selesai (jika diaktifkan) dan bicaralah dengan jelas ke mikrofon.

5.2.6.2

Melakukan Panggilan Pribadi dengan Tombol Panggilan Satu Sentuhan

PEMBERITAHUAN:
Penekanan tombol yang dapat diprogram harus dilakukan dari layar Awal.

Fitur Panggilan Satu Sentuhan memungkinkan Anda untuk melakukan Panggilan Pribadi dengan mudah ke alias Panggilan Pribadi atau ID yang sudah ditentukan. Fitur ini dapat ditetapkan untuk tombol yang dapat diprogram dengan menekan singkat atau lama.

Anda HANYA dapat menetapkan satu alias atau ID ke tombol Panggilan Satu Sentuhan. Radio Anda dapat memiliki beberapa tombol Panggilan Satu Sentuhan yang diprogram.

1 Tekan tombol **Panggilan Satu Sentuhan** untuk melakukan Panggilan Pribadi ke alias atau ID Panggilan Pribadi yang telah ditentukan sebelumnya.

2 Pegang mikrofon 1 sampai 2 inci (2,5 sampai 5,0 cm) dari mulut Anda.

3 Tekan tombol **PTT** untuk melakukan panggilan.

Lampu LED menyala hijau tak berkedip.

Layar akan menampilkan alias atau ID Panggilan Pribadi.

4 Tunggu hingga Nada Izin Bicara selesai (jika diaktifkan) dan bicaralah dengan jelas ke mikrofon.

5 Lepaskan tombol **PTT** untuk mendengarkan.

Ketika radio target menjawab, LED berkedip hijau.

Jika tidak ada aktivitas suara selama jangka waktu yang telah ditentukan, panggilan akan berakhir.

5.2.6.3

Melakukan Panggilan dengan Tombol Panggil Manual yang Dapat Diprogram

Fitur ini memungkinkan pengguna radio melakukan panggilan pribadi menggunakan tombol panggilan manual yang dapat diprogram.

5.2.6.3.1

Melakukan Panggilan Pribadi

1 Tekan tombol **Panggilan Manual** terprogram untuk masuk ke layar Panggilan Manual.

Layar akan menampilkan `Nomor:`.

2 Gunakan keypad untuk memasukkan alias atau ID Pribadi subscriber.

3 Pegang mikrofon 1 sampai 2 inci (2,5 sampai 5,0 cm) dari mulut Anda.

4 Tekan tombol **PTT** untuk melakukan panggilan.

Lampu LED menyala hijau tak berkedip. Ikon Panggilan Pribadi muncul di sudut kanan atas. Baris teks pertama menunjukkan alias subscriber. Baris teks kedua menunjukkan status panggilan.

5 Tunggu hingga Nada Izin Bicara selesai (jika diaktifkan) dan bicaralah dengan jelas ke mikrofon.

6 Lepaskan tombol **PTT** untuk mendengarkan.

Ketika radio target menjawab, LED berkedip hijau.

Jika tidak ada aktivitas suara selama jangka waktu yang telah ditentukan, panggilan akan berakhir. Anda akan mendengar nada pendek. Layar menampilkan pesan `Panggilan Diakhiri.`

5.2.6.4

Melakukan Panggilan Telepon Pribadi Outbound dengan Tombol Pemanggil Dapat Diprogram

1 Tekan tombol **Panggilan Manual** terprogram untuk masuk ke layar Panggilan Manual.

Layar akan menampilkan `Nomor:`.

2 Gunakan keypad untuk memasukkan nomor telepon, dan tekan OK untuk memanggil nomor yang dimasukkan.

Tekan untuk menghapus karakter yang tidak diinginkan. Tekan diikuti dalam 2 detik untuk menyisipkan jeda. P menggantikan * dan # pada layar.

Jika berhasil, baris pertama layar menampilkan Panggilan Telepon. Baris kedua pada layar menampilkan nomor telepon yang dipanggil.

Jika nomor yang dipilih ternyata tidak valid, layar menampilkan pemberitahuan mini negatif Panggilan Telepon Gagal, Sumber Daya Tidak Tersedia, atau Izin Tidak Valid.

Jika OK ditekan tanpa memasukkan nomor telepon, radio mengeluarkan nada indikator positif, lalu nada indikator negatif. Layar tidak berubah.

3 Tekan lama untuk mengakhiri panggilan.

Baris pertama layar menampilkan Mengakhiri. Baris kedua layar menampilkan Panggilan Telepon....

Layar menampilkan pesan Panggilan Telepon Diakhiri.

5.2.6.5

Melakukan Panggilan Telepon Pribadi Outbound melalui Menu Telepon

1 Tekan OK untuk mengakses menu.

2 Tekan atau ke Telepon dan tekan OK untuk memilih.

3 Tekan OK untuk memilih Panggilan Manual.

Baris pertama layar menampilkan Nomor, baris kedua layar menampilkan kursor yang berkedip.

4 Gunakan keypad untuk memasukkan nomor telepon, dan tekan OK untuk memanggil nomor yang dimasukkan.

Tekan untuk menghapus karakter yang tidak diinginkan. Tekan diikuti dalam 2 detik untuk menyisipkan jeda. P menggantikan * dan # pada layar.

Jika berhasil, baris pertama layar menampilkan Panggilan Telepon. Baris kedua pada layar menampilkan nomor telepon yang dipanggil.

Jika nomor yang dipilih ternyata tidak valid, layar menampilkan pemberitahuan mini negatif Panggilan Telepon Gagal, Sumber Daya Tidak Tersedia, atau Izin Tidak Valid.

Jika OK ditekan tanpa memasukkan nomor telepon, radio mengeluarkan nada indikator positif, lalu nada indikator negatif. Layar tidak berubah.

5 Tekan lama untuk mengakhiri panggilan.

Baris pertama layar menampilkan Mengakhiri. Baris kedua layar menampilkan Panggilan Telepon....

Layar menampilkan pesan Panggilan Telepon Diakhiri.

5.2.6.6

Melakukan Panggilan Telepon Pribadi Outbound dari Kontak

PEMBERITAHUAN:
Jika Panggilan Manual pada Papan Opsi CPS MOTOTRBO Connect Plus dinonaktifkan, item Nomor Telepon**tidak akan** ditampilkan di Menu.

1 Tekan OK untuk mengakses menu.

2 Tekan atau ke Kontak dan tekan OK untuk memilih.

3 Tekan ▲ atau ▼ ke `Panggilan Manual` dan tekan OK untuk memilih.

4 Tekan ▲ atau ▼ ke `Nomor Telepon` dan tekan OK untuk memilih.

Baris pertama layar menampilkan `Nomor`, baris kedua layar menampilkan kursor yang berkedip.

5 Gunakan keypad untuk memasukkan nomor telepon, dan tekan OK untuk memanggil nomor yang dimasukkan.

Jika tombol **PTT** ditekan, layar menampilkan pemberitahuan mini negatif, `Tekan OK untuk Mengirim` dan kembali ke layar sebelumnya.

Tekan ◀ untuk menghapus karakter yang tidak diinginkan. Tekan * diikuti # dalam 2 detik untuk menyisipkan jeda. `P` menggantikan * dan # pada layar.

Jika berhasil, baris pertama layar menampilkan `Panggilan Telepon`. Baris kedua pada layar menampilkan nomor telepon yang dipanggil.

Jika OK ditekan tanpa memasukkan nomor telepon, radio mengeluarkan nada indikator positif, lalu nada indikator negatif. Layar tidak berubah.

6 Tekan lama ⏻ untuk mengakhiri panggilan.

Baris pertama layar menampilkan `Mengakhiri`. Baris kedua layar menampilkan `Panggilan Telepon....`

Layar menampilkan pesan `Panggilan Telepon Diakhiri`.

5.2.6.7

Menunggu Alokasi Saluran dalam Panggilan Telepon Pribadi Outbound

Ketika melakukan Panggilan Telepon Pribadi, baris pertama layar menampilkan `Panggilan Telepon`. Baris kedua pada layar menampilkan nomor telepon yang dipanggil.

Jika panggilan terhubung, ikon Panggilan Telepon sebagai Panggilan Pribadi muncul di sudut kanan atas. Baris pertama layar menampilkan nomor telepon.

Jika tidak berhasil, layar menampilkan pemberitahuan mini negatif `Panggilan Telepon Gagal`, `Sumber Daya Tidak Tersedia`, atau `Izin Tidak Valid`.

Tekan lama untuk mengakhiri panggilan.

Tampilan kembali ke layar sebelumnya.

5.2.6.8

Melakukan Buffered Over-Dial dalam Panggilan Telepon Pribadi Outbound Terhubung

Selama panggilan, ikon Panggilan Telepon sebagai Panggilan Pribadi muncul di sudut kanan atas. Baris pertama layar menampilkan nomor telepon.

1 Gunakan keypad untuk memasukkan digit.

Tekan untuk menghapus karakter yang tidak diinginkan. Tekan diikuti dalam 2 detik untuk menyisipkan jeda. `P` menggantikan ∗ dan ♯ pada layar.

Baris teks pertama pada layar menampilkan `Digit Ekstra`, baris teks kedua pada layar menampilkan digit ekstra yang dimasukkan.

2 Tekan tombol OK .

Jika tombol **PTT** ditekan, layar menampilkan pemberitahuan mini negatif, `Tekan OK untuk Mengirim` dan kembali ke layar sebelumnya.

Ikon Panggilan Telepon sebagai Panggilan Pribadi muncul di sudut kanan atas. Baris teks pertama pada layar menampilkan nomor telepon dengan digit over-dial dicantumkan.

3 Lakukan salah satu dari langkah berikut.

- Tekan untuk kembali ke layar Panggilan Telepon.
- Tekan lama untuk mengakhiri panggilan.

5.2.6.9

Melakukan Live Over-Dial dalam Panggilan Telepon Pribadi Outbound Terhubung

Selama panggilan, ikon Panggilan Telepon sebagai Panggilan Pribadi muncul di sudut kanan atas. Baris pertama layar menampilkan nomor telepon.

1 Tekan tombol **PTT** dan gunakan keypad untuk memasukkan digit.

Ikon Panggilan Telepon sebagai Panggilan Pribadi muncul di sudut kanan atas. Baris teks pertama pada layar menampilkan nomor telepon dengan digit over-dial dicantumkan.

2 Tekan lama untuk mengakhiri panggilan.

Baris pertama layar menampilkan `Mengakhiri.` Baris kedua layar menampilkan `Panggilan Telepon....`

Layar menampilkan pesan `Panggilan Telepon Diakhiri.`

5.3

Fitur Lanjutan dalam Mode Connect Plus

Bab ini menjelaskan pengoperasian fitur-fitur yang terdapat di radio Anda.

5.3.1

Pengingat Saluran Rumah

Fitur ini akan mengingatkan ketika radio tidak diatur ke saluran rumah selama jangka waktu tertentu.

Jika fitur ini diaktifkan menggunakan CPS, nada Pengingat Saluran Rumah dan suara pengumuman, baris pertama layar menampilkan `Non` dan baris kedua menampilkan `Saluran Rumah` secara berkala jika radio tidak diatur ke saluran rumah selama jangka waktu tertentu.

Anda dapat merespons pengingat dengan melakukan salah satu tindakan berikut:

- Kembali ke saluran rumah.
- Matikan suara pengingat untuk sementara menggunakan tombol yang dapat diprogram.
- Buat saluran rumah baru menggunakan tombol yang dapat diprogram.

5.3.2

Fallback Otomatis

Fallback Otomatis adalah fitur sistem yang memungkinkan Anda terus melakukan dan menerima panggilan non-darurat pada Kontak Grup terpilih, jika terjadi sejumlah tipe kegagalan sistem Connect Plus.

Jika salah satu kegagalan ini terjadi, radio Anda akan mencoba menjelajah ke site Connect Plus yang lain. Proses pencarian ini dapat menyebabkan radio Anda mencari site Connect Plus yang dapat beroperasi, atau mengakibatkan radio Anda mencari sebuah Saluran Fallback (jika radio Anda diaktifkan untuk Fallback Otomatis).

Saluran Fallback adalah repeater yang normalnya adalah bagian dari site Connect Plus yang dapat dioperasikan, tetapi tidak dapat berkomunikasi dengan pengendali site atau jaringan Connect Plus pada saat itu. Dalam mode Fallback, repeater bekerja sebagai repeater digital tunggal. Mode Fallback Otomatis hanya mendukung Panggilan Grup non-darurat. Tipe panggilan lain tidak didukung dalam Mode Fallback.

5.3.2.1

Indikasi Mode Fallback Otomatis

Saat radio Anda sedang menggunakan saluran Fallback, Anda mendengar Nada Fallback yang terputus-putus kira-kira setiap 15 detik (kecuali sedang melakukan transmisi). Layar secara berkala menampilkan pesan singkat, `Saluran Fallback`. Radio Anda hanya mengizinkan PTT pada Kontak Grup terpilih (Panggilan Grup, Panggilan Multigrup, atau Semua Panggilan Site). Mode ini tidak membolehkan Anda melakukan jenis panggilan lain.

5.3.2.2

Melakukan/Menerima Panggilan dalam Mode Fallback

PEMBERITAHUAN:
Panggilan hanya didengar oleh radio yang sedang memantau saluran Fallback yang sama dan dipilih ke Grup yang sama. Panggilan tidak menggunakan jaringan site atau repeater lain.
Panggilan suara Darurat atau Peringatan Darurat tidak tersedia dalam mode Fallback. Jika Anda menekan tombol darurat dalam mode Fallback, radio memberikan nada salah tekan tombol. Radio yang dilengkapi layar juga akan menampilkan pesan, "Feature not available" (Fitur tidak tersedia).

Panggilan pribadi (radio ke radio) dan Telepon tidak tersedia dalam mode Fallback. Jika Anda mencoba melakukan panggilan ke kontak pribadi, Anda akan mendengar nada penolakan. Pada saat ini Anda harus memilih kontak grup yang diinginkan.
Panggilan lain yang tidak didukung meliputi Monitor Jarak Jauh, Peringatan Panggilan, Pemeriksaan Radio, Pengaktifan Radio, Penonaktifan Radio, pengolahan pesan Teks, Pembaruan Lokasi, dan panggilan data paket.

Akses Saluran Lalu Lintas yang Disempurnakan (Enhanced Traffic Channel Access/ETCA) tidak didukung dalam mode Fallback Otomatis. Jika dua pengguna radio atau lebih menekan **PTT** secara bersamaan (atau hampir bersamaan), kedua radio kemungkinan mengirim transmisi hingga **PTT** dilepas. Dalam hal ini, kemungkinan tidak akan ada transmisi yang dipahami oleh radio penerima.

Melakukan panggilan dalam mode Fallback mirip dengan fungsi normal. Cukup pilih kontak grup yang ingin Anda gunakan (menggunakan metode seleksi saluran radio secara normal), dan tekan **PTT** untuk memulai panggilan Anda. Saluran tersebut bisa jadi telah digunakan oleh grup lain. Jika saluran sedang digunakan, Anda mendengar nada sibuk dan layar akan menampilkan pesan “Saluran Sibuk”. Anda dapat memilih kontak Grup, Multi-grup, atau Semua Panggilan Site menggunakan metode pemilihan saluran radio secara normal. Saat radio sedang beroperasi pada Saluran Fallback, Multigrup akan bekerja persis seperti Grup lainnya. Radio tersebut hanya akan didengar oleh radio yang saat ini dipilih dalam Multi-grup yang sama.

5.3.2.3

Kembali ke Pengoperasian Normal

Jika site kembali ke pengoperasian trunking normal saat Anda sedang berada dalam jangkauan repeater Fallback, radio keluar secara otomatis dari mode Fallback Otomatis. Anda akan mendengar "bip" registrasi ketika radio berhasil terdaftar. Jika berada dalam jangkauan site yang beroperasi (yang bukan dalam mode Fallback), Anda dapat menekan tombol Permintaan Roaming (jika diprogram untuk radio Anda) untuk memaksa radio mencari dan mendaftar ke site yang tersedia. Jika tidak ada site lain yang tersedia, radio kembali ke mode Fallback Otomatis setelah pencarian selesai. Jika berkendara di luar jangkauan repeater Fallback, radio masuk ke mode Pencarian (layar menunjukkan `Mencari`).

5.3.3
Pemeriksaan Radio

Jika diaktifkan, fitur ini memungkinkan Anda menentukan apakah radio lain aktif di dalam sistem tanpa mengganggu pengguna radio itu. Tidak ada pemberitahuan suara atau visual yang tampil di radio target.

Fitur ini hanya tersedia untuk ID subscriber.

5.3.3.1

Mengirimkan Pemeriksaan Radio

1 Akses fitur Pemeriksaan Radio.

Kontrol Radio	Langkah
Tombol Periksa Radio terprogram	**a** Tekan tombol **Pemeriksaan Radio** terprogram. **b** Tekan ▲ atau ▼ ke alias atau ID subscriber yang diperlukan dan tekan OK untuk memilih.
Menu	**a** Tekan OK untuk mengakses menu. **b** Tekan ▲ atau ▼ ke `Kontak` dan tekan OK untuk memilih. **c** Tekan ▲ atau ▼ ke alias atau ID subscriber yang diperlukan dan tekan OK untuk memilih. **d** Tekan ▲ atau ▼ ke `Pemeriksaan Radio` dan tekan OK untuk memilih.

Layar menampilkan Alias Target, yang menunjukkan permintaan sedang diproses. Lampu LED menyala hijau tak berkedip.

2 Tunggu respons.

Jika radio target aktif dalam sistem, sebuah nada akan berbunyi dan layar akan sekilas menampilkan `Radio Target Tersedia`.

Jika radio target tidak aktif dalam sistem, sebuah nada akan berbunyi dan layar akan sekilas menampilkan `Radio Target Tidak Tersedia`.

Radio kembali ke alias subscriber atau layar ID saat dimulai melalui Menu.

Radio kembali ke Layar Awal jika dimulai melalui tombol yang bisa diprogram.

5.3.4

Monitor Jauh

Gunakan fitur Monitor Jauh untuk menghidupkan mikrofon pada radio target (hanya alias atau ID subscriber). LED warna hijau akan berkedip sekali pada subscriber target. Anda dapat menggunakan fitur ini untuk memantau aktivitas suara di sekitar radio target dari jauh.

Radio harus diprogram agar Anda bisa menggunakan fitur ini.

5.3.4.1

Menginisiasi Monitor Jauh

PEMBERITAHUAN:
Monitor Jauh secara otomatis berhenti setelah durasi yang telah terprogram atau ketika ada usaha untuk memulai transmisi, ubah saluran atau putuskan daya radio.

1 Akses fitur Monitor Jauh.

Kontrol Radio	Langkah
Tombol Monitor Jauh Terprogram	**a** Tekan tombol **Monitor Jauh** terprogram. **b** Tekan ▲ atau ▼ ke alias atau ID subscriber yang diperlukan dan tekan OK untuk memilih.
Menu	**a** Tekan OK untuk mengakses menu. **b** Tekan ▲ atau ▼ ke Kontak dan tekan OK untuk memilih. **c** Tekan ▲ atau ▼ ke alias atau ID subscriber

Kontrol Radio	Langkah
	yang diperlukan dan tekan OK untuk memilih. **d** Tekan ▲ atau ▼ ke `Panggilan Manual` dan tekan OK untuk memilih. **e** Tekan ▲ atau ▼ ke `Mon. Jauh` dan tekan OK untuk memilih.

Baris teks pertama akan menampilkan `Rem. Monitor`. Baris teks kedua menampilkan Alias Target, yang menunjukkan bahwa permintaan sedang berlangsung. Lampu LED berkedip hijau.

2 Tunggu respons.

Jika berhasil, nada indikator positif akan berbunyi dan layar akan menampilkan sesaat `Monitor Jauh Berhasil`. Radio akan memutar audio dari radio yang dipantau selama durasi yang telah ditetapkan dan layar akan menampilkan `Mon. Jauh`, yang diikuti dengan alias target. Setelah timer berakhir, nada peringatan radio akan berbunyi dan LED akan mati.

Jika gagal, nada indikator negatif akan berbunyi dan layar akan menampilkan `Monitor Jauh Gagal`.

5.3.5
Pemindaian

Fitur ini memungkinkan radio Anda memantau dan menggabungkan panggilan untuk grup/saluran yang ditentukan dalam daftar pindai yang telah diprogram sebelumnya. Ketika pemindaian diaktifkan, ikon pemindaian akan muncul di bilah status dan LED akan berkedip kuning saat idle.

5.3.5.1

Memulai dan Menghentikan Pemindaian

PEMBERITAHUAN:
Prosedur ini Mengaktifkan atau Menonaktifkan fitur Pemindaian untuk semua zona Connect Plus dengan ID Jaringan yang sama dengan zona yang saat ini terpilih. Penting mode untuk diketahui bahwa bahkan saat fitur Pemindaian diaktifkan melalui prosedur ini, pemindaian mungkin tetap tidak aktif untuk beberapa (atau semua) grup di daftar pindai Anda. Lihat Mengedit Daftar Pindai di halaman 282 untuk informasi selengkapnya.

Anda dapat memulai dan menghentikan pemindaian dengan menekan tombol **Pindai** terprogram **ATAU** ikuti prosedur yang dijelaskan berikut.

1. Tekan OK untuk mengakses menu.
2. Tekan ▲ atau ▼ ke `Pindai` dan tekan OK untuk memilih.
3. Tekan ▲ atau ▼ ke `Nyalakan` atau `Matikan` dan tekan OK untuk memilih.
   - Layar menampilkan `Pindai Mati` jika pemindaian dinonaktifkan.
   - Menu Pindai menampilkan pesan `Matikan` jika pemindaian diaktifkan.
   - Layar menampilkan `Pindai Mati` ketika pemindaian dinonaktifkan.
   - Menu Pindai menampilkan pesan `Nyalakan` jika pemindaian dinonaktifkan.

5.3.5.2

Menjawab suatu Transmisi Selama Pemindaian

Selama pemindaian, radio berhenti pada grup tempat aktivitas terdeteksi. Radio terus menerus mendengarkan

anggota di daftar pindai saat idle/diam pada saluran kontrol.

1. Pegang mikrofon 1 sampai 2 inci (2,5 sampai 5,0 cm) dari mulut Anda.
2. Tekan tombol **PTT** selama waktu hang.

   Lampu LED menyala hijau tak berkedip.
3. Tunggu hingga Nada Izin Bicara selesai (jika diaktifkan), dan bicaralah dengan jelas ke mikrofon.
4. Lepaskan tombol **PTT** untuk mendengarkan.

   Jika Anda tidak menjawab dalam waktu hang, radio kembali memindai grup lain.

5.3.6

Pemindaian yang Dapat Dikonfigurasi oleh Pengguna

Jika menu Edit Daftar diaktifkan, maka pengguna dapat Menambahkan dan Menghapus anggota pemindaian dari menu Tambah Anggota. Anggota Daftar Pindai harus merupakan Kontak Grup biasa (misalnya, bukan Multigrup atau Site Semua Panggilan/Pangilan Semua Dalam Jaringan) yang saat ini ditetapkan ke posisi Pemilih Saluran di Connect Plus Zone dengan ID Jaringan yang sama dengan Zona yang dipilih saat ini. Alias Grup Bicara juga tidak boleh sama dengan Grup Bicara yang sudah disertakan dalam Daftar Pindai Zona saat ini.

Pemindaian dapat diaktifkan atau dinonaktifkan dari menu, atau dengan menekan tombol **Pindai Aktif/Nonaktif** yang diprogram.

Fitur ini berfungsi hanya jika radio saat ini tidak sedang melakukan panggilan. Jika Anda saat ini sedang mendengarkan panggilan, radio Anda tidak dapat memindai untuk panggilan grup lain, dan karena itu tidak menyadari panggilan yang sedang berlangsung. Setelah panggilan telepon Anda selesai, radio Anda kembali ke slot waktu saluran kontrol, dan dapat memindai grup yang berada dalam daftar pindai.

5.3.7

Mengaktifkan atau Menonaktifkan Pemindaian

PEMBERITAHUAN:
Prosedur ini Mengaktifkan atau Menonaktifkan fitur Pemindaian untuk semua zona dengan ID Jaringan yang sama dengan zona yang saat ini terpilih. Penting mode untuk diketahui bahwa bahkan saat fitur Pemindaian diaktifkan melalui prosedur ini, pemindaian mungkin tetap tidak aktif untuk beberapa (atau semua) grup di daftar pindai Anda. Baca bagian berikut untuk informasi selengkapnya.

Jika Pemindaian diaktifkan, ikon Pemindaian akan muncul pada layar Anda. Jika Pemindaian diaktifkan dan Anda tidak sedang berpartisipasi dalam panggilan, LED akan berkedip hijau dan kuning.

Prosedur untuk mengaktifkan atau menonaktifkan Pemindaian bergantung pada bagaimana radio Anda diprogram. Jika diprogram dengan tombol Pemindaian Aktif/Nonaktif, gunakan tombol tersebut untuk mengaktifkan atau menonaktifkan fitur. Jika radio Anda telah diprogram sehingga Pemindaian dapat diaktifkan atau dinonaktifkan melalui menu, ikuti prosedur berikut ini.

1. Tekan OK untuk mengakses menu.
2. Tekan ▲ atau ▼ ke `Pindai` dan tekan OK untuk memilih.
3. Tekan ▲ atau ▼ ke `Nyalakan` atau `Matikan` dan tekan OK untuk memilih.
   - Layar menampilkan pesan singkat `Pindai Nyala` ketika pemindaian dinonaktifkan.
   - Layar menampilkan pesan singkat `Pindai Mati` ketika pemindaian dinonaktifkan.

5.3.8

Mengedit Daftar Pindai

PEMBERITAHUAN:
Jika entri daftar pindai adalah grup yang saat ini terpilih, radio akan mendengar aktivitas pada grup ini tanpa memperhatikan apakah entri daftar saat ini menampilkan tanda centang atau tidak. Ketika tidak sedang melakukan panggilan, radio mendengarkan aktivitas pada Grup yang Dipilih, Multigrup, Semua Panggilan Site, dan Grup Balik Darurat Default (jika dikonfigurasi untuk salah satu opsi tersebut). Pengoperasian ini tidak dapat dinonaktifkan. Jika Pindai diaktifkan, maka radio juga akan mendengarkan aktivitas pada anggota Daftar Pindai Zona yang diaktifkan.

Daftar pindai Anda menentukan grup mana yang dapat dipindai. Daftar tersebut dibuat saat radio Anda diprogram. Jika radio diprogram untuk mengizinkan pengeditan daftar pindai, Anda bisa:

- Mengaktifkan/nonaktifkan pemindaian untuk grup individual pada daftar.
- Tambah dan Hapus anggota pindai dari menu Tambah Anggota. Baca Menambahkan atau Menghapus Grup melalui Menu Tambah Anggota di halaman 283 .

PEMBERITAHUAN:
Anggota Daftar Pindai harus merupakan Kontak Grup biasa (bukan Multigrup atau Site Semua Panggilan/Pangilan Semua Dalam Jaringan) yang saat ini ditetapkan ke posisi Pemilih Saluran di Connect Plus Zone dengan ID Jaringan yang sama dengan Zona yang dipilih saat ini.
Alias Grup Bicara juga tidak boleh sama dengan Grup Bicara yang sudah disertakan dalam Daftar Pindai Zona saat ini.

1. Tekan OK untuk mengakses menu.
2. Tekan ▲ atau ▼ ke `Lihat/Edit Daftar` dan tekan OK untuk memilih.
3. Tekan ▲ atau ▼ ke nama Grup yang diinginkan.

   Jika tanda centang di depan nama Grup, pemindaian sedang diaktifkan untuk Grup ini.

   Jika tidak ada tanda centang di depan nama Grup, pemindaian sedang dinonaktifkan untuk Grup ini.

4 OK untuk memilih Grup yang diinginkan.

Layar menampilkan Aktifkan jika pemindaian sedang dinonaktifkan untuk Grup.

Layar menampilkan Nonaktifkan jika pemindaian sedang diaktifkan untuk Grup.

5 Pilih opsi yang ditampilkan (Aktifkan atau Nonaktifkan) dan tekan OK untuk memilih.

Bergantung pada opsi yang mana yang dipilih, radio sementara menampilkan Pemindaian Diaktifkan atau Pemindaian Dinonaktifkan sebagai konfirmasi.

Radio menampilkan lagi daftar pindai Zona. Jika pemindaian diaktifkan untuk Grup, tanda centang ditampilkan sebelum nama Grup. Jika pemindaian dinonaktifkan untuk Grup, tanda centang tidak ada sebelum nama Grup.

5.3.9

Menambahkan atau Menghapus Grup melalui Menu Tambah Anggota

Radio Connect Plus tidak memungkinkan nomor grup duplikat atau alias grup duplikat ditempatkan ke daftar pindai zona (atau ditampilkan sebagai "kandidat pemindaian"). Jadi, daftar "kandidat pemindaian" yang dijelaskan dalam langkah 6 dan langkah 7 kadang-kadang berubah setelah grup ditambahkan atau dihapus dari daftar pemindaian zona.

Jika radio Anda telah diprogram sehingga Anda dapat mengedit daftar pindai, Anda dapat menggunakan menu Tambah Anggota untuk menambahkan grup ke daftar pindai dari zona yang saat ini terpilih, atau menghapus grup dari daftar pindai zona yang saat ini terpilih.

1 Tekan OK untuk mengakses menu.

2 Tekan ▲ atau ▼ ke Opsi pindai dan tekan OK untuk memilih.

3 Tekan ▲ atau ▼ ke <Tambah Anggota> dan tekan OK untuk memilih.

Layar menampilkan Tambah Anggota dari Zona (n = nomor zona Connect Plus dari zona Connect Plus pertama di radio Anda dengan ID Jaringan yang sama dengan zona yang saat ini terpilih).

4 Lakukan salah satu dari langkah berikut.

- Jika grup yang ingin Anda tambahkan ke daftar pindai ditetapkan ke posisi pemilih saluran di zona tersebut, lakukan langkah langkah 6.
- Jika grup yang ingin Anda tambahkan ke daftar pindai ditetapkan ke posisi pemilih saluran di zona Connect Plus yang berbeda, lakukan langkah langkah 5.

5 Tekan ▲ atau ▼ untuk menggulirkan daftar zona Connect Plus yang memiliki ID Jaringan yang sama dengan zona yang saat ini terpilih.

6 Setelah menemukan zona Connect Plus tempat grup yang diinginkan ditetapkan ke posisi pemilih saluran, tekan OK untuk memilih.

Radio Anda akan menampilkan entri pertama dalam daftar grup yang ditetapkan ke posisi saluran di zona tersebut. Grup di daftar itu disebut "kandidat pemindaian", karena grup dapat ditambahkan ke daftar pindai zona yang saat ini terpilih (atau grup sudah berada di daftar pindai zona tersebut).

Jika zona tersebut tidak memiliki grup yang dapat ditambahkan ke daftar pindai, radio akan menampilkan Tidak ada Kandidat.

7 Tekan ▲ atau ▼ untuk menggulir daftar grup kandidat.

Jika tanda tambah (+) ditampilkan segera sebelum alias grup, hal ini berarti grup tersebut saat ini berada di daftar pindai untuk zona yang terpilih.

Jika tanda tambah (+) tidak ditampilkan segera sebelum alias, maka grup tersebut saat ini tidak berada di daftar pindai, tetapi dapat ditambahkan.

8 Tekan OK saat alias grup yang diinginkan ditampilkan.

Jika grup ini saat ini tidak berada di daftar pindai untuk zona yang saat ini terpilih, pesan Tambah (Alias Grup) akan ditampilkan.

Jika grup ini saat sudah berada di daftar pindai untuk zona yang saat ini terpilih, pesan Hapus (Alias Group) akan ditampilkan.

9 Tekan OK untuk menerima pesan yang ditampilkan (Tambah atau Hapus).

Jika menghapus grup dari daftar, Anda akan tahu bahwa hal itu berhasil karena tanda tambah (+) tidak akan lagi ditampilkan segera sebelum alias.

Saat menambahkan suatu grup ke daftar, Anda akan mengetahui operasi tersebut berhasil dari tanda plus (+) yang kini ada sebelum alias.

Jika Anda mencoba menambahkan sebuah grup, dan daftar sudah penuh, radio akan menampilkan Daftar Penuh. Jika hal ini terjadi, penting untuk menghapus sebuah grup dari daftar sebelum menambahkan yang baru.

10 Setelah selesai, tekan sesering mungkin untuk kembali ke menu yang diinginkan.

5.3.10

Memahami Operasi Pemindaian

PEMBERITAHUAN:
Jika Radio bergabung dalam panggilan untuk anggota Daftar Pindai Zona dari Zona berbeda dan Pencatat Waktu Hang Panggilan berakhir sebelum Anda dapat merespons, agar dapat merespons Anda harus menelusuri Zona dan Saluran dari Anggota Daftar Pindai tersebut dan memulai panggilan baru.

Ada beberapa situasi saat Anda dapat melewatkan panggilan grup yang berada dalam daftar pindai Anda. Bila Anda melewatkan panggilan karena salah satu alasan berikut, hal ini bukan menunjukkan adanya masalah dengan radio Anda. Ini adalah operasi pemindaian normal untuk Connect Plus.

- Fitur Pindai tidak diaktifkan (periksa ikon pindai pada layar).
- Anggota daftar pindai telah dinonaktifkan melalui menu (lihat Mengedit Daftar Pindai di halaman 282).

- Anda sudah berpartisipasi dalam panggilan.
- Tidak ada anggota grup yang terpindai terdaftar di lokasi Anda (Sistem Multisite saja).

5.3.11

Pindai Talkback

Jika radio Anda memindai panggilan dari daftar pindai grup yang dapat dipilih, dan jika tombol **PTT** ditekan selama panggilan terpindai, pengoperasian radio tergantung pada apakah Pindai Talkback diaktifkan atau dinonaktifkan selama pemrograman radio.

Pindai Talkback Nonaktif

Radio keluar dari panggilan terpindai dan mencoba mentransmisikan kontak untuk posisi saluran yang sedang dipilih. Setelah Waktu Hang Panggilan pada kontak yang sedang dipilih berakhir, radio kembali ke saluran awal dan memulai Pencatat Waktu Hang Pemindaian. Radio kembali ke pemindaian grup setelah Pencatat Waktu Hang Pemindaian berakhir.

Pindai Talkback Aktif

Jika tombol **PTT** ditekan selama Waktu Hang Grup panggilan terpindai, radio akan mencoba melakukan transmisi grup terpindai.

PEMBERITAHUAN:
Jika Anda memindai panggilan untuk grup yang tidak diberi posisi saluran dalam zona yang sedang dipilih dan Anda melewatkan Waktu Hang panggilan, beralihlah ke zona yang sesuai lalu pilih posisi saluran dari grup yang ingin Anda tanggapi.

5.3.12

Mengedit Prioritas untuk Grup Bicara

Fitur Monitor Prioritas membuat radio dapat menerima transmisi dari grup bicara secara otomatis dengan prioritas lebih tinggi jika radio sedang dalam panggilan lain. Nada akan berbunyi jika radio beralih ke panggilan dengan prioritas lebih tinggi.

Ada dua tingkat prioritas untuk grup bicara: P1 dan P2. P1 mempunyai prioritas lebih tinggi daripada P2.

PEMBERITAHUAN:
Jika ID Grup Balik Darurat Default dikonfigurasi dalam CPS Papan Opsi MOTOTRBO Connect Plus, ada tiga tingkat prioritas untuk grup bicara: P0, P1, dan P2. P0 adalah ID Grup Balik Darurat permanen dan merupakan prioritas tertinggi. Tanyakan kepada penyalur atau administrator sistem Anda untuk informasi lebih lanjut.

1. Tekan OK untuk mengakses menu.
2. Tekan ▲ atau ▼ ke Pindai dan tekan OK untuk memilih.
3. Tekan ▲ atau ▼ ke Lihat/Edit Daftar dan tekan OK untuk memilih.
4. Tekan ▲ atau ▼ ke grup bicara yang diinginkan dan tekan OK untuk memilih.
5. Tekan ▲ atau ▼ ke Edit Prioritas dan tekan OK untuk memilih.
6. Tekan ▲ atau ▼ ke level prioritas yang diperlukan dan tekan OK untuk memilih.

   Layar menampilkan pemberitahuan mini positif sebelum kembali ke layar sebelumnya. Ikon prioritas muncul di sebelah kiri grup bicara.

5.3.13

Pengaturan Kontak

PEMBERITAHUAN:
Anda dapat menambah, atau mengedit ID subscriber untuk Kontak Connect Plus. Menghapus ID subscriber hanya bisa dilakukan oleh dealer. Jika fitur Privasi diaktifkan pada saluran, Anda dapat membuat panggilan suara dengan privasi diaktifkan pada saluran tersebut. Hanya radio target dengan Kunci Privasi yang sama, atau Nilai Kunci dan ID Kunci yang sama dengan radio Anda yang dapat menguraikan transmisi tersebut.

Akses ke Daftar Kontak tergantung pada konfigurasi zona:

- Jika hanya satu zona dikonfigurasi di radio, Daftar Kontak langsung menampilkan daftar dari zona yang dipilih saat ini.
- Jika berbagai zona dikonfigurasi di radio, Folder Kontak Zona menampilkan semua zona dengan ID jaringan identik sebagai zona yang dipilih saat ini. Pengguna dapat mengakses kontak dalam tiga zona.

Kontak memberikan fitur “buku telepon” di radio Anda. Setiap entri berhubungan dengan suatu alias atau ID yang Anda gunakan untuk memulai panggilan.

Setiap zona menyediakan Daftar Kontak hingga 100 kontak. Jenis kontak berikut tersedia:

- Panggilan Pribadi
- Panggilan Grup
- Panggilan Multikelompok
- Semua Panggilan Site Suara
- Semua Panggilan Site Teks
- Panggilan Pengiriman

Jenis kontak Panggilan Pengiriman digunakan untuk mengirim pesan teks ke PC pengirim melalui Server Pesan Teks pihak ketiga.

5.3.13.1

Melakukan Panggilan Pribadi dari Kontak

1. Tekan OK untuk mengakses menu.
2. Tekan ▲ atau ▼ ke Kontak dan tekan OK untuk memilih.

   Entri diurutkan berdasar abjad.
3. Pegang mikrofon 1 sampai 2 inci (2,5 sampai 5,0 cm) dari mulut Anda.
4. Tekan tombol **PTT** untuk melakukan panggilan.

   Lampu LED menyala hijau tak berkedip.
5. Tunggu hingga Nada Izin Bicara selesai (jika diaktifkan), dan bicaralah dengan jelas ke mikrofon.
6. Lepaskan tombol **PTT** untuk mendengarkan.

   Ketika radio target menjawab, LED berkedip hijau dan layar menampilkan ID pengguna pemancar.

Jika tidak ada aktivitas suara selama jangka waktu yang telah ditentukan, panggilan akan berakhir.

Anda akan mendengar nada pendek. Layar menampilkan pesan `Panggilan Diakhiri.`

5.3.13.2

Melakukan Pencarian Alias Panggilan

Anda juga dapat menggunakan pencarian alias atau alfanumerik untuk memperoleh alias subscriber yang diperlukan.

Fitur ini hanya tersedia saat dalam Kontak.

1 Tekan OK untuk mengakses menu.

2 Tekan ▲ atau ▼ ke `Kontak` dan tekan OK untuk memilih.

Entri diurutkan berdasar abjad.

3 Masukkan karakter pertama dari alias yang diperlukan, lalu tekan tombol ▲ atau ▼ untuk menemukan alias yang diperlukan.

4 Pegang mikrofon 1 sampai 2 inci (2,5 sampai 5,0 cm) dari mulut Anda.

5 Tekan tombol **PTT** untuk melakukan panggilan.

Lampu LED menyala hijau tak berkedip. Layar menampilkan alias tujuan.

6 Tunggu hingga Nada Izin Bicara selesai (jika diaktifkan), dan bicaralah dengan jelas ke mikrofon.

7 Lepaskan tombol **PTT** untuk mendengarkan.

Ketika radio target menjawab, LED berkedip hijau.

Jika tidak ada aktivitas suara selama jangka waktu yang telah ditentukan, panggilan akan berakhir.

Layar menampilkan pesan `Panggilan Diakhiri.`

5.3.13.3

Menambah Kontak Baru

1 Tekan OK untuk mengakses menu.

2 Tekan ▲ atau ▼ ke Kontak dan tekan OK untuk memilih.

3 Tekan ▲ atau ▼ ke Kontak Baru dan tekan OK untuk memilih.

4 Gunakan keypad untuk memasukkan nomor kontak, lalu tekan OK untuk mengonfirmasi.

5 Gunakan keypad untuk memasukkan nama kontak, lalu tekan OK untuk mengonfirmasi.

6 Jika menambahkan Kontak Radio, tekan ▲ atau ▼ ke jenis dering yang diinginkan, dan tekan OK untuk memilih.

Radio membunyikan nada indikator positif dan layar menampilkan Kontak Disimpan.

5.3.14

Pengaturan Indikator Panggilan

Fitur ini memungkinkan pengguna radio mengonfigurasi panggilan atau pesan teks yang menderingkan nada.

5.3.14.1

Mengaktifkan dan Menonaktifkan Dering Panggilan untuk Peringatan Panggilan

Anda dapat memilih, atau menghidupkan atau mematikan nada dering untuk Peringatan Panggilan yang diterima.

1 Tekan OK untuk mengakses menu.

2 Tekan ▲ atau ▼ ke Utilitas dan tekan OK untuk memilih.

3 Tekan ▲ atau ▼ ke Pengaturan Radio dan tekan OK untuk memilih.

4 Tekan ▲ atau ▼ ke Nada/Peringatan dan tekan OK untuk memilih.

5 Tekan ▲ atau ▼ ke Dering Panggilan dan tekan OK untuk memilih.

6 Tekan ▲ atau ▼ ke Peringatan Panggilan dan tekan OK untuk memilih.
Zona saat ini akan ditandai dengan ✓.

7 Tekan ▲ atau ▼ ke nada yang diinginkan dan tekan OK untuk memilih.

✓ muncul di samping nada yang dipilih.

5.3.14.2

Mengaktifkan dan Menonaktifkan Dering Panggilan untuk Panggilan Pribadi

Anda dapat menghidupkan atau mematikan nada dering untuk Panggilan Pribadi.

1 Tekan OK untuk mengakses menu.

2 Tekan ▲ atau ▼ ke Utilitas dan tekan OK untuk memilih.

3 Tekan ▲ atau ▼ ke Pengaturan Radio dan tekan OK untuk memilih.

4 Tekan ▲ atau ▼ ke Nada/Peringatan dan tekan OK untuk memilih.

5 Tekan ▲ atau ▼ ke Dering Panggilan dan tekan OK untuk memilih.

6 Tekan ▲ atau ▼ ke Panggilan Pribadi dan tekan OK untuk memilih.

7 Tekan OK untuk mengaktifkan/menonaktifkan nada dering Panggilan Pribadi.

Layar menampilkan ✓ di samping Diaktifkan, jika nada dering Panggilan Pribadi diaktifkan.

✓ tidak ditampilkan ketika nada dering Panggilan Pribadi dinonaktifkan.

5.3.14.3

Mengaktifkan dan Menonaktifkan Dering Panggilan untuk Pesan Teks

Anda dapat mengaktifkan atau menonaktifkan nada dering untuk Pesan Teks yang diterima.

1 Tekan OK untuk mengakses menu.

2 Tekan ▲ atau ▼ ke Utilitas dan tekan OK untuk memilih.

3 Tekan ▲ atau ▼ ke Pengaturan Radio dan tekan OK untuk memilih.

4 Tekan ▲ atau ▼ ke Nada/Peringatan dan tekan OK untuk memilih.

5 Tekan ▲ atau ▼ ke Dering Panggilan dan tekan OK untuk memilih.

6 Tekan ▲ atau ▼ ke Pesan Teks dan tekan OK untuk memilih.

Zona saat ini akan ditandai dengan ✓.

7 Tekan ▲ atau ▼ ke nada yang diinginkan dan tekan OK untuk memilih.

✓ muncul di samping nada yang dipilih.

5.3.14.4

Memilih Jenis Tanda Dering

PEMBERITAHUAN:
Tombol terprogram **Jenis Tanda Dering** dialokasikan oleh penyalur atau administrator sistem Anda. Tanyakan kepada dealer atau administrator sistem Anda untuk mengetahui bagaimana radio Anda diprogram.

Anda dapat memprogram panggilan radio ke salah satu panggilan getar yang ditentukan sebelumnya. Jika status Semua Nada nonaktif, radio akan menampilkan ikon Semua Nada Bisu. Jika status Semua Nada aktif, jenis peringatan dering yang terkait akan ditampilkan.

Radio bergetar sekali jika nada dering sementara dipilih. Radio bergetar terus-menerus jika gaya dering berulang dipilih. Bila diatur ke Dering dan Getar, radio akan memutar nada dering tertentu jika ada aktivitas radio masuk (misalnya, Tanda Panggilan atau Pesan). Suara terdengar seperti nada indikator positif atau panggilan tak terjawab.

5.3.14.5

Volume Nada Alarm yang Semakin Tinggi

Anda bisa memprogram radio Anda untuk terus-menerus memperingatkan Anda ketika ada panggilan radio yang masih belum terjawab. Hal ini dilakukan dengan otomatis meningkatkan volume nada alarm secara berkala. Fitur ini disebut Escalert.

5.3.15

Log Panggilan

Radio Anda terus mencatat semua Panggilan Pribadi keluar, yang dijawab, dan yang tidak terjawab. Gunakan fitur log panggilan untuk melihat dan mengatur panggilan saat ini.

Anda dapat melakukan tugas berikut ini di masing-masing daftar panggilan Anda:

- Hapus

- Lihat Detail

5.3.15.1

Melihat Panggilan Terbaru

Daftarnya mencantumkan `Tak Terjawab`, `Terjawab`, dan `Keluar`.

1 Tekan OK untuk mengakses menu.

2 Tekan ▲ atau ▼ ke `Log Panggilan` dan tekan OK untuk memilih.

3 Tekan ▲ atau ▼ daftar yang diinginkan dan tekan OK untuk memilih.

Layar menampilkan entri terbaru di bagian teratas daftar.

4 Tekan ▲ atau ▼ untuk melihat daftar.

Tekan tombol **PTT** untuk memulai Panggilan Pribadi dengan alias atau ID yang saat ini dipilih.

5.3.15.2

Menghapus Panggilan dari Daftar Panggilan

1 Tekan OK untuk mengakses menu.

2 Tekan ▲ atau ▼ ke `Log Panggilan` dan tekan OK untuk memilih.

3 Tekan ▲ atau ▼ ke daftar yang diinginkan dan tekan OK untuk memilih.

Jika Anda memilih daftar panggilan yang tidak memiliki entri, layar akan menampilkan `Daftar Kosong`, dan nada rendah akan berbunyi jika Nada Keypad diaktifkan .

4 Tekan ▲ atau ▼ ke alias atau ID yang diperlukan dan tekan OK untuk memilih.

5 Tekan ▲ atau ▼ ke Hapus dan tekan OK untuk memilih.

6 Lakukan salah satu langkah berikut:

- Tekan OK untuk memilih Ya untuk menghapus entri. Layar menampilkan Entri Dihapus.
- Tekan ▲ atau ▼ ke Tidak, dan tekan tombol OK untuk kembali ke layar sebelumnya.

5.3.15.3

Melihat Detail dari Log Panggilan

1 Tekan OK untuk mengakses menu.

2 Tekan ▲ atau ▼ ke Log Panggilan dan tekan OK untuk memilih.

3 Tekan ▲ atau ▼ ke daftar yang diinginkan dan tekan OK untuk memilih.

4 Tekan ▲ atau ▼ ke alias atau ID yang diperlukan dan tekan OK untuk memilih.

5 Tekan ▲ atau ▼ ke Lihat Detail dan tekan OK untuk memilih.

Layar menunjukkan detail daftar panggilan.

5.3.16

Operasi Peringatan Panggilan

Penyerantaan Peringatan Panggilan memungkinkan Anda mengingatkan pengguna radio tertentu untuk memanggil Anda kembali ketika dia bisa melakukannya.

Fitur ini bisa diakses melalui menu menggunakan Kontak, panggilan manual, atau tombol **Akses Satu Sentuhan** terprogram.

5.3.16.1

Merespons Peringatan Panggilan

Ketika Anda menerima Peringatan Panggilan:

- Nada berulang akan berbunyi.
- LED kuning akan berkedip.
- Layar menampilkan daftar notifikasi yang berisi Peringatan Panggilan dengan alias atau ID radio pemanggil.

Bergantung pada konfigurasi oleh dealer atau administrator sistem, Anda dapat merespons Peringatan Panggilan dengan melakukan salah satu hal berikut:

- Tekan tombol **PTT** dan respons dengan Panggilan Pribadi secara langsung ke pemanggil.
- Tekan tombol **PTT** untuk melanjutkan komunikasi grup bicara normal.
  Peringatan Panggilan dipindahkan ke opsi Panggilan Tak Terjawab di menu Log. Anda dapat merespons pemanggil dari log Panggilan Tak Terjawab.

Lihat Daftar Notifikasi di halaman 205 dan Fitur Log Panggilan di halaman 140 untuk informasi selengkapnya.

5.3.16.2

Membuat Peringatan Panggilan dari Daftar Kontak

1. Tekan OK untuk mengakses menu.
2. Tekan ▲ atau ▼ ke `Kontak` dan tekan OK untuk memilih.
3. Gunakan salah satu langkah yang digambarkan berikut untuk memilih alias atau ID subscriber yang diperlukan:
   - pilih alias subscriber secara langsung
     - Tekan ▲ atau ▼ ke alias yang subscriber yang diperlukan dan tekan OK untuk memilih.
   - gunakan menu `Panggilan Manual`
     - Tekan ▲ atau ▼ ke `Panggilan Manual` dan tekan OK untuk memilih.

- Layar entri teks Panggilan Manual akan ditampilkan. Masukkan ID Subscriber dan tekan OK .

4 Tekan atau ke `Peringatan Panggilan` dan tekan OK untuk memilih.

Layar menampilkan `Peringatan Panggilan: <Alias atau ID Subscriber>Peringatan Panggilan` dan alias atau ID Subscriber, yang menunjukkan bahwa Peringatan Panggilan telah terkirim.

LED menyala hijau terus ketika radio Anda mengirim Peringatan Panggilan.

Jika pemberitahuan Peringatan Panggilan diterima, layar akan menampilkan pesan `Peringatan Panggilan Berhasil.`

Jika respons Peringatan Panggilan tidak diterima, layar akan menampilkan pesan `Peringatan Panggilan Gagal.`

5.3.16.3

Membuat Peringatan Panggilan dengan Tombol Akses Satu Sentuhan

Tekan tombol **Akses Satu Sentuhan** yang diprogram untuk membuat Peringatan Panggilan ke alias yang telah ditentukan.

Layar akan menampilkan `Peringatan Panggilan` dan alias atau ID subscriber, menunjukkan bahwa Peringatan Panggilan telah terkirim.
LED menyala hijau terus ketika radio Anda mengirim Peringatan Panggilan.

Jika pemberitahuan Peringatan Panggilan diterima layar menampilkan `Peringatan Panggilan Berhasil.`

Jika respons Peringatan Panggilan tidak diterima, layar akan menampilkan pesan `Peringatan Panggilan Gagal.`

5.3.17

Mode Bisu

Mode Bisu memungkinkan untuk membisukan semua indikator audio di radio Anda.

Setelah Mode Bisu aktif, semua indikator audio dibisukan, kecuali fitur dengan prioritas lebih tinggi misalnya operasi darurat.

Setelah keluar dari Mode Bisu, radio Anda melanjutkan pemutaran nada dan transmisi audio.

PENTING:
Pengguna hanya dapat mengaktifkan Face Down atau Man Down pada satu waktu. Kedua fitur tidak dapat diaktifkan secara bersamaan.

5.3.17.1

Mengaktifkan Mode Bisu

Ikuti prosedur untuk menonaktifkan Mode Bisu.

Akses fitur ini menggunakan tombol **Mode Bisu** terprogram.

Hal berikut mungkin terjadi saat Mode bisu aktif:

- Nada Indikator Positif Akan Berbunyi.
- Layar menampilkan `Mode Bisu Aktif`.
- Lampu LED berwarna merah akan terus berkedip hingga Anda keluar dari Mode Bisu.
- Layar menampilkan ikon **Mode Bisu** di layar utama.
- Radio dibisukan.
- Pewaktu Mode Bisu mulai menghitung mundur dengan durasi yang dikonfigurasikan.

5.3.17.2

Menyetel Pewaktu Mode Bisu

Fitur Mode Bisu dapat diaktifkan dalam waktu yang telah dikonfigurasikan terlebih dahulu dengan menyetel Pewaktu Mode Bisu. Durasi pewaktu dikonfigurasikan di menu radio dengan rentang antara 0,5–6 jam. Anda akan dikeluarkan dari Mode Bisu setelah pewaktu kedaluwarsa.

Jika pewaktu habis pada angka 0, radio tetap berada dalam Mode bisu selama waktu yang tidak ditentukan hingga tombol **Mode Bisu** terprogram ditekan.

1. Tekan OK untuk mengakses menu.
2. Tekan ▲ atau ▼ ke `Utilitas`. Tekan OK untuk memilih.
3. Tekan ▲ atau ▼ ke `Pengaturan Radio`. Tekan OK untuk memilih.

4 Tekan ▲ atau ▼ ke `Pewaktu Mode Bisu`.
Tekan OK untuk memilih.

5 Tekan ▲ atau ▼ untuk mengedit nilai angka setiap digit, lalu tekan OK .

5.3.17.3

Keluar dari Mode Bisu

Fitur ini dapat dikeluarkan secara otomatis setelah Pewaktu Mode Bisu kedaluwarsa.

Lakukan salah satu hal berikut untuk keluar dari Mode bisu secara manual:

- Tekan tombol **Mode Bisu** terprogram.
- Tekan tombol **PTT** pada entri apa pun.

Hal berikut akan terjadi saat Mode bisu nonaktif:

- Nada Indikator Negatif Akan Berbunyi.
- Layar menampilkan `Mode Bisu Nonaktif`.
- Lampu LED berwarna merah mati.
- Ikon **Mode Bisu** hilang dari layar utama.
- Radio menghidupkan suara dan status speaker dipulihkan.
- Jika pewaktu belum kedaluwarsa, Pewaktu mode bisu dihentikan.

PEMBERITAHUAN:
Pengguna juga dikeluarkan dari Mode Bisu jika mengirimkan suara atau beralih ke saluran yang belum terprogram.

5.3.18

Pengoperasian Darurat

PEMBERITAHUAN:
Jika radio Anda diprogram untuk inisiasi darurat Senyap atau Senyap dengan Suara, radio seringkali keluar otomatis dari operasi senyap setelah Panggilan Darurat atau Peringatan Darurat selesai. Pengecualian pada aturan ini adalah bila Peringatan Darurat merupakan Mode Darurat yang dikonfigurasi dan bila Senyap merupakan Jenis Darurat yang dikonfigurasi. Jika radio Anda diprogram dengan cara ini, operasi senyap berlanjut hingga Anda membatalkan operasi senyap dengan menekan **PTT** atau tombol yang dikonfigurasikan untuk Darurat Nonaktif.

Panggilan suara darurat dan Peringatan Darurat tidak didukung saat beroperasi dalam mode Connect Plus Auto Fallback. Untuk informasi selengkapnya, lihat Fallback Otomatis di halaman 273 .

Peringatan Darurat digunakan untuk menunjukkan situasi genting. Anda dapat memulai fungsi Darurat kapan saja pada tampilan layar mana pun, bahkan saat ada aktivitas pada saluran saat ini. Menekan tombol **Darurat** yang terprogram akan memulai mode Darurat terprogram. Mode Darurat terprogram juga dapat dimulai dengan memicu fitur Man Down opsional. Fitur Darurat mungkin dinonaktifkan pada radio Anda.

Dealer Anda bisa mengatur durasi penekanan tombol untuk tombol **Darurat** yang terprogram, kecuali untuk penekanan lama, yang sama dengan semua tombol lainnya:

Tekan sebentar
Antara 0,05 hingga 0,75 detik.

Tekan lama
Antara 1,00 hingga 3,75 detik.

Tombol **Darurat** ditetapkan ke fitur Darurat Aktif/Tidak Aktif. Tanyakan kepada dealer tentang pengoperasian yang ditetapkan dari tombol **Darurat**.

- Jika penekanan singkat tombol **Darurat** ditetapkan untuk menghidupkan mode Darurat, maka penekanan lama tombol **Darurat** ditetapkan untuk keluar dari mode Darurat.
- Jika penekanan lama tombol **Darurat** ditetapkan untuk menghidupkan mode Darurat, maka penekanan singkat tombol **Darurat** ditetapkan untuk keluar dari mode Darurat.

Bila dipilih ke zona Connect Plus, radio Anda mendukung tiga mode Darurat:

Panggilan Darurat

Anda harus menekan tombol **PTT** untuk berbicara pada slot waktu darurat yang ditetapkan.

Panggilan Darurat dengan Suara untuk Diikuti

Untuk transmisi pertama pada slot waktu darurat yang ditetapkan, mikrofon secara otomatis kembali terdengar dan Anda dapat berbicara tanpa menekan tombol **PTT**. Mikrofon tetap "panas" dengan mode ini selama jangka waktu yang diprogram ke radio. Untuk transmisi berikutnya dalam panggilan Darurat yang sama, Anda harus menekan tombol **PTT**.

Peringatan Darurat

Peringatan Darurat bukan merupakan panggilan suara. Ini adalah pemberitahuan darurat yang dikirimkan ke radio yang dikonfigurasi untuk menerima peringatan ini. Radio mengirimkan peringatan darurat menggunakan saluran kontrol dari lokasi yang terdaftar saat ini. Peringatan Darurat diterima oleh radio dalam jaringan Connect Plus yang diprogram untuk peringatan ini (terlepas dari lokasi jaringan tempatnya terdaftar).

Hanya salah satu dari Mode Darurat yang dapat ditetapkan ke tombol Darurat per zona. Selain itu, setiap mode Darurat memiliki jenis berikut:

Reguler

Radio memulai Darurat dan menunjukkan indikator audio dan/atau visual.

Senyap

Radio memulai Darurat tanpa indikator audio atau visual. Radio akan menahan seluruh indikasi audio atau visual panggilan Darurat hingga Anda menekan tombol **PTT** untuk memulai transmisi suara.

Senyap dengan Suara

Sama dengan pengoperasian Senyap, kecuali bahwa radio juga bersuara untuk beberapa transmisi suara.

5.3.18.1

Menerima Darurat Masuk

Radio Anda dapat diprogram untuk membunyikan nada peringatan dan juga menampilkan informasi tentang Darurat masuk. Jika diprogram, saat menerima Darurat yang masuk, layar menampilkan layar Detail Darurat dengan ikon darurat, Alias, atau ID radio yang meminta Darurat, Kontak Grup yang sedang digunakan untuk Darurat, dan satu baris informasi tambahan. Informasi tambahan adalah nama zona yang berisi Kontak Grup.

Pada saat ini, radio hanya menampilkan Darurat yang didekode baru-baru ini. Jika Darurat baru diterima sebelum

Darurat sebelumnya dibersihkan, detail Darurat baru menggantikan detail Darurat sebelumnya.

Tergantung bagaimana radio Anda diprogram, layar Detail Darurat (atau layar Daftar Alarm) akan tetap ditampilkan di layar radio Anda meskipun setelah Darurat berakhir. Anda dapat menyimpan detail darurat ke Daftar Alarm, atau menghapus detail darurat seperti yang dijelaskan di bagian berikut.

5.3.18.2

Menyimpan Detail Darurat ke Daftar Alarm

Menyimpan detail darurat ke Daftar Alarm memungkinkan Anda melihat detailnya lagi lain kali dengan memilih Daftar Alarm dari Menu Utama.

1 Saat layar Detail Darurat (atau Daftar Alarm) ditampilkan, tekan .

Layar **Keluar dari Daftar Alarm** akan ditampilkan.

2 Lakukan salah satu tindakan berikut:

- Pilih **Ya** dan tekan OK untuk menyimpan detail darurat ke Daftar Alarm, dan keluar dari layar Detail Darurat (atau Daftar Alarm).
- Pilih **Tidak** dan tekan OK untuk kembali ke layar Detail Darurat (atau Daftar Alarm).

5.3.18.3

Menghapus Detail Darurat

1 Saat layar Detail Darurat ditampilkan, tekan .

Layar **Hapus** ditampilkan.

2 Lakukan salah satu tindakan berikut:

- Pilih **Ya** dan tekan OK untuk menghapus detail darurat.
- Pilih **Tidak** dan tekan OK untuk kembali ke layar Detail Darurat.

5.3.18.4

Merespons Panggilan Darurat

PEMBERITAHUAN:
Jika Anda tidak merespons panggilan Darurat selama waktu yang dialokasikan untuk Waktu Hang Panggilan Darurat, panggilan Darurat akan selesai. Jika ingin berbicara ke grup setelah Waktu Hang Panggilan Darurat berakhir, Anda harus terlebih dahulu memilih posisi saluran yang ditetapkan ke grup (jika belum dipilih). Lalu, tekan **PTT** untuk memulai Panggilan non-Darurat ke grup.

1 Ketika menerima Alarm Darurat, tekan tombol untuk menghentikan semua indikasi Alarm Darurat yang diterima.

2 Tekan tombol **PTT** untuk memulai transmisi suara pada grup Darurat.

Semua radio yang memantau grup ini mendengar transmisi Anda.

3 Tunggu hingga Nada Izin Bicara selesai (jika diaktifkan) dan bicaralah dengan jelas ke mikrofon.

Lampu LED menyala hijau.

4 Lepaskan tombol **PTT** untuk mendengarkan.

Bila radio yang mengirim sinyal darurat merespons, LED akan berkedip hijau. Ikon Panggilan Grup, ID grup, dan ID radio yang melakukan transmisi akan ditampilkan di layar.

5.3.18.5

Merespons Peringatan Darurat

PEMBERITAHUAN:
Kontak Grup yang digunakan untuk Peringatan Darurat tidak boleh digunakan untuk komunikasi suara. Hal ini dapat mencegah radio lain mengirimkan dan menerima Peringatan Darurat pada grup yang sama.

Peringatan Darurat dari sebuah radio menunjukkan bahwa pengguna sedang berada dalam situasi mendesak. Anda dapat merespons peringatan tersebut dengan memulai panggilan pribadi ke radio yang menyatakan darurat, memulai panggilan grup ke grup bicara, mengirimkan Peringatan Panggilan, memulai Monitor Jarak Jauh atas radio tersebut, dll. Respons yang benar ditentukan oleh organisasi Anda dan situasi individu.

5.3.18.6

Mengabaikan Panggilan Balik Darurat

Penyempurnaan fitur ini ditujukan untuk memberikan opsi agar radio dapat mengabaikan Panggilan Balik Darurat aktif.

Untuk mengaktifkan Abaikan Panggilan Balik Darurat, radio harus dikonfigurasi di Perangkat Lunak Pemrograman Pelanggan Connect Plus (CPCPS).

Apabila fitur ini diaktifkan, radio tidak menampilkan indikasi Panggilan Darurat dan tidak menerima audio apa pun pada ID Grup Balik Darurat default.

Untuk informasi lebih lanjut, hubungi dealer Anda.

5.3.18.7

Memulai Panggilan Darurat

PEMBERITAHUAN:
Jika radio Anda diatur ke Senyap, radio tidak menyediakan indikator audio atau visual selama mode Darurat hingga Anda menekan tombol **PTT** untuk memulai transmisi suara.
Jika radio Anda diatur ke Senyap dengan Suara, radio awalnya tidak menyediakan indikator audio atau visual bahwa radio berada dalam mode Darurat. Namun, radio Anda bersuara lagi untuk transmisi radio sesuai keadaan darurat Anda. Indikator darurat hanya muncul setelah Anda menekan tombol **PTT** untuk memulai transmisi suara dari radio Anda.

Untuk operasi “Senyap” maupun “Senyap dengan Suara”, radio secara otomatis keluar dari operasi senyap setelah Panggilan Darurat selesai.

1 Tekan tombol **Darurat** yang terprogram.

2 Tekan tombol **PTT** untuk memulai transmisi suara pada grup Darurat.

Ketika Anda melepaskan tombol **PTT**, panggilan Darurat akan berlanjut selama jangka waktu yang dialokasikan untuk Waktu Hang Panggilan Darurat.

Jika Anda menekan tombol **PTT** selama waktu ini, panggilan Darurat akan berlanjut.

5.3.18.8

Memulai Panggilan Darurat dengan Suara untuk Diikuti

Radio Anda harus diprogram untuk jenis operasi ini.

Bila diaktifkan untuk operasi ini, ketika Anda menekan tombol **Darurat** yang sudah diprogram, dan ketika radio Anda menerima penetapan slot waktu, mikrofon akan diaktifkan secara otomatis tanpa menekan tombol **PTT**. Status mikrofon yang diaktifkan ini juga disebut sebagai “mikrofon aktif”. "Hot mic" ini berlaku pada transmisi suara pertama dari radio Anda selama panggilan Darurat. Untuk transmisi berikutnya dalam panggilan Darurat yang sama, Anda harus menekan tombol **PTT**.

1. Tekan tombol **Darurat** yang terprogram.
2. Mikrofon tetap aktif selama waktu "hot mic" yang ditentukan dalam Pemrograman codeplug radio.

   Selama waktu ini, LED akan menyala hijau.
3. Tekan dan tahan tombol **PTT** untuk berbicara lebih lama daripada durasi terprogram.

5.3.18.9

Memulai Peringatan Darurat

PEMBERITAHUAN:
Jika radio Anda diprogram untuk "Senyap" atau "Senyap dengan Suara", radio ini tidak akan menyediakan indikasi audio atau visual bahwa ia mengirimkan Peringatan Darurat. Jika diprogram untuk "Senyap", operasi senyap akan berlanjut tanpa batas waktu hingga Anda menekan tombol PTT atau tombol yang dikonfigurasikan untuk "Darurat Nonaktif". Jika diprogram untuk "Senyap dengan Suara", radio otomatis akan membatalkan operasi senyap ketika pengontrol site menyiarkan Peringatan Darurat.

Tekan tombol **Darurat** berwarna jingga.

Saat mengirimkan transmisi Peringatan Darurat ke pengontrol site, layar radio menampilkan ikon

Darurat, kontak Grup yang digunakan untuk Peringatan Darurat, dan `Alarm TX`.

Setelah Peringatan Darurat berhasil dikirim dan sedang disiarkan untuk didengarkan radio lain, nada indikator positif akan berbunyi dan layar radio menampilkan `Alarm Terkirim`. Jika Peringatan Darurat tidak berhasil, nada indikator negatif berbunyi dan radio menampilkan `Alarm Gagal`.

5.3.18.10

Keluar dari Mode Darurat

PEMBERITAHUAN:
Jika panggilan Darurat berakhir karena habisnya Waktu Hang Darurat, tetapi kondisi darurat belum usai, tekan tombol **Darurat** lagi untuk memulai ulang prosesnya.

Jika Anda memulai Peringatan Darurat dengan menekan tombol **Darurat** terprogram, radio Anda akan keluar dari mode Darurat secara otomatis setelah menerima respons dari sistem Connect Plus.

Jika Anda memulai panggilan **Darurat** dengan menekan tombol Darurat, radio Anda otomatis akan ditetapkan sebagai saluran bila saluran ini tersedia. Setelah radio Anda mengirimkan pesan yang menunjukkan keadaan darurat, Anda tidak dapat membatalkan panggilan Darurat Anda. Namun, jika Anda menekan tombol ini secara tak sengaja atau keadaan darurat tidak ada lagi, Anda mungkin ingin mengucapkan hal ini melalui saluran yang ditetapkan. Ketika Anda melepaskan tombol **PTT**, panggilan Darurat akan dihentikan setelah Waktu Hang Panggilan Darurat berakhir.

Jika radio Anda dikonfigurasikan untuk Keadaan Darurat dengan Suara untuk Diikuti, gunakan periode “hot mic” untuk menjelaskan kesalahan Anda, kemudian tekan dan lepaskan tombol **PTT** untuk menghentikan transmisi. Panggilan Darurat akan dihentikan setelah Waktu Hang Panggilan Darurat berakhir.

5.3.19

Pengolahan Pesan Teks

Radio Anda mampu menerima data, misalnya pesan teks, dari radio lain atau aplikasi pesan teks.

Ada dua jenis pesan teks, Pesan Teks Singkat Radio Mobile Digital (DMR) dan pesan teks. Panjang maksimal Pesan Teks Singkat DMR adalah 23 karakter. Panjang maksimum pesan teks adalah 280 karakter, termasuk baris

subjek. Baris subjek hanya muncul saat Anda menerima pesan dari aplikasi email.

PEMBERITAHUAN:
Panjang karakter maksimum hanya berlaku untuk model dengan perangkat lunak dan perangkat keras terbaru. Untuk model radio dengan perangkat lunak dan perangkat keras lama, panjang maksimum pesan teks adalah 140 karakter. Untuk informasi lebih lanjut, hubungi dealer Anda.

5.3.19.1

Mengirimkan Pesan Teks Cepat

Radio Anda mendukung maksimal 10 pesan Teks Cepat yang telah diprogram oleh dealer.

Meskipun isi pesan Teks Cepat telah ditentukan sebelumnya, Anda dapat mengedit setiap pesan sebelum mengirimnya.

Jika Anda mengirimkan pesan, lakukan berikut untuk memilih penerima:

- Tekan ▲ atau ▼ ke alias yang diinginkan dan tekan OK untuk memilih.
- Tekan ▲ atau ▼ ke `Panggilan Manual`, dan tekan OK untuk memilih. Baris pertama layar menampilkan `Nomor:`. Baris kedua layar menampilkan kursor yang berkedip. Masukkan alias atau ID subscriber, lalu tekan OK .

Layar akan menampilkan `Mengirim Pesan`, yang mengonfirmasikan bahwa pesan Anda sedang dikirim.

Jika pesan berhasil dikirim, nada akan berbunyi dan layar akan menampilkan `Pesan Terkirim`.

Jika pesan tidak dapat dikirim, sebuah nada rendah akan berbunyi dan layar akan menampilkan `Kirim Pesan Gagal`.

Jika pesan teks gagal terkirim, radio mengembalikan Anda ke layar opsi `Kirim Ulang` (lihat Mengelola Pesan Teks yang Gagal Terkirim di halaman 311).

5.3.19.2

Mengirimkan Pesan Teks Cepat dengan Tombol Akses Satu Sentuhan

Untuk mengirim pesan Teks Cepat yang sudah ditentukan ke alias yang sudah ditentukan, tekan tombol **Akses Satu Sentuhan** terprogram.

Layar akan menampilkan `Mengirim Pesan`.

Jika pesan berhasil dikirim, radio akan menampilkan indikasi sebagai berikut:

- Sebuah nada positif berbunyi.
- Layar akan menampilkan `Pesan Terkirim`.

Jika pesan gagal dikirim, radio akan menampilkan indikasi sebagai berikut:

- Sebuah nada negatif akan berbunyi.
- Layar menampilkan pesan `Kirim Pesan Gagal`.

Jika pesan teks gagal dikirim, radio kembali ke layar pilihan `Kirim Ulang`.
Lihat Mengelola Pesan Teks yang Gagal Terkirim di halaman 311 .

5.3.19.3

Mengakses Folder Konsep

Folder Draf menyimpan maksimum sepuluh (10) pesan terakhir yang disimpan. Saat folder penuh, pesan SMS yang berikutnya disimpan akan otomatis menggantikan pesan SMS terlama dalam folder.

PEMBERITAHUAN:
Anda dapat mengedit pesan teks yang disimpan sebelum mengirimnya. Hanya tersedia dengan mikrofon keypad (lihat Mengedit dan Mengirim Pesan Teks yang Disimpan di halaman 309 . Untuk kembali ke layar Awal, tekan lama kapan saja.

5.3.19.3.1

Melihat Pesan Teks yang Disimpan

1 Akses fitur **Pesan Teks**.

Kontrol Radio	Langkah
Tombol Pesan Teks terprogram	Tekan tombol **Pesan Teks** terprogram.

Kontrol Radio	Langkah
Menu	**a** Tekan OK untuk mengakses menu. **b** Tekan ▲ atau ▼ ke Pesan dan tekan OK untuk memilih.

2 Tekan ▲ atau ▼ ke Konsep dan tekan OK untuk memilih.

3 Tekan ▲ atau ▼ ke pesan yang diinginkan dan tekan OK untuk memilih.

5.3.19.3.2

Mengedit dan Mengirim Pesan Teks yang Disimpan

1 Tekan OK lagi saat melihat pesan.

2 Tekan ▲ atau ▼ ke Edit dan tekan OK untuk memilih.

Kursor berkedip akan ditampilkan.

3 Gunakan keypad untuk mengetik pesan.

Tekan ◀ untuk bergerak satu spasi ke kiri. Tekan tombol ▶ atau # untuk bergerak satu spasi ke kanan. Tekan * untuk menghapus karakter yang tidak diinginkan. Tekan lama # untuk mengganti metode entri teks.

4 Tekan OK setelah selesai membuat pesan.

5 Pilih penerima pesan berdasarkan:

- Tekan ▲ atau ▼ ke alias yang diinginkan dan tekan OK untuk memilih.
- Tekan ▲ atau ▼ ke Panggilan Manual, dan tekan OK untuk memilih. Baris pertama

layar menampilkan `Nomor:`. Baris kedua layar menampilkan kursor yang berkedip. Masukkan alias atau ID subscriber, lalu tekan OK .

Layar akan menampilkan `Mengirim Pesan`, yang mengonfirmasikan bahwa pesan Anda sedang dikirim.

Jika pesan berhasil dikirim, nada akan berbunyi dan layar akan menampilkan `Pesan Terkirim`.

Jika pesan tidak dapat dikirim, sebuah nada rendah akan berbunyi dan layar akan menampilkan `Kirim Pesan Gagal`.

Jika pesan teks gagal dikirim, pesan tersebut akan dipindahkan ke folder Item Terkirim dan ditandai dengan ikon Gagal Terkirim.

5.3.19.3.3

Menghapus Pesan Teks yang Disimpan dari Konsep

1 Akses fitur **Pesan Teks**.

Kontrol Radio	Langkah
Tombol Pesan Teks terprogram	Tekan tombol **Pesan Teks** terprogram.
Menu	**a** Tekan OK untuk mengakses menu. **b** Tekan ▲ atau ▼ ke `Pesan` dan tekan OK untuk memilih.

2 Tekan ▲ atau ▼ ke `Konsep` dan tekan OK untuk memilih.

3 Tekan ▲ atau ▼ ke pesan yang diinginkan dan tekan OK untuk memilih.

4 Tekan ▲ atau ▼ ke `Hapus` dan tekan OK untuk menghapus pesan teks.

5.3.19.4

Mengelola Pesan Teks yang Gagal Terkirim

Anda bisa memilih salah satu dari opsi berikut ini ketika berada di layar opsi Resend (Kirim Ulang):

- Resend (Kirim Ulang)
- Putar Maju
- Edit

5.3.19.4.1

Mengirim Ulang Pesan Teks

Tekan OK untuk mengirimkan ulang pesan yang sama ke subscriber/alias grup atau ID yang sama.

Jika pesan berhasil dikirim, nada akan berbunyi dan layar menampilkan pemberitahuan mini positif.

Jika pesan berhasil dikirim, nada akan berbunyi dan layar menampilkan pemberitahuan mini negatif.

5.3.19.4.2

Meneruskan Pesan Teks

Pilih Teruskan untuk mengirimkan pesan ke alias atau ID subscriber/grup yang lain.

1. Tekan ▲ atau ▼ ke Teruskan dan tekan OK untuk memilih.
2. Untuk memilih penerima pesan, tekan ▲ atau ▼ ke alias atau ID yang diinginkan dan tekan OK untuk memilih.

Layar akan menampilkan Mengirim Pesan, yang mengonfirmasikan bahwa pesan Anda sedang dikirim.

Jika pesan berhasil dikirim, nada akan berbunyi dan layar akan menampilkan Pesan Terkirim.

Jika pesan tidak dapat dikirim, sebuah nada rendah akan berbunyi dan layar akan menampilkan Kirim Pesan Gagal.

5.3.19.5

Mengelola Pesan Teks Terkirim

Setelah pesan dikirimkan ke radio lain, pesan akan disimpan di Item Terkirim. Pesan teks terkirim terbaru selalu ditambahkan ke bagian teratas daftar Item Terkirim.

Folder Item Terkirim mampu menyimpan maksimal 30 pesan terakhir yang terkirim. Ketika folder penuh, pesan teks terkirim berikutnya akan otomatis menggantikan pesan teks terlama di folder itu.

PEMBERITAHUAN:

Untuk kembali ke layar Awal, tekan lama kapan saja.

5.3.19.5.1

Melihat Pesan Teks Terkirim

1 Akses fitur **Pesan Teks**.

Kontrol Radio	Langkah
Tombol Pesan Teks	Tekan tombol **Pesan Teks** terprogram.
terprogram	
Menu	**a** Tekan OK untuk mengakses menu. **b** Tekan atau ke `Pesan` dan tekan OK untuk memilih.

2 Tekan atau ke `Item Terkirim` dan tekan OK untuk memilih.

3 Tekan atau ke pesan yang diperlukan dan tekan OK untuk memilih.

Ikon di sudut kanan atas layar menunjukkan status pesan (lihat Ikon Item Terkirim di halaman 251).

5.3.19.5.2

Mengirimkan Pesan Teks Terkirim

Anda dapat memilih salah satu dari opsi berikut ini ketika melihat pesan teks terkirim:

- Kirim Ulang
- Putar Maju
- Edit
- Hapus

1 Tekan OK lagi saat melihat pesan.

2 ▲ atau ▼ tekan OK untuk memilih ke salah satu dari opsi berikut ini dan .

Opsi	Langkah
Putar Maju	Pilih Teruskan untuk mengirimkan pesan teks terpilih ke alias atau ID subscriber/grup lain (lihat Meneruskan Pesan Teks di halaman 311).
Hapus	Pilih Hapus untuk menghapus pesan teks.
Kirim Ulang	Pilih Kirim Ulang untuk mengirimkan pesan teks yang dipilih ke alias atau ID subscriber/ grup yang sama. Layar akan menampilkan Mengirim Pesan, yang mengonfirmasikan bahwa pesan yang sama sedang dikirim ke radio target yang sama. Jika pesan berhasil dikirim, nada akan berbunyi dan layar akan menampilkan Pesan Terkirim. Jika pesan tidak dapat dikirim, sebuah nada rendah akan berbunyi dan layar akan menampilkan Kirim Pesan Gagal. Jika pesan teks gagal terkirim, radio mengembalikan Anda ke layar opsi Kirim Ulang. Tekan OK untuk

Opsi	Langkah
	mengirim ulang pesan ke alias atau ID subscriber/grup yang sama.

Jika Anda keluar dari layar pengiriman pesan teks ketika pesan sedang dikirimkan, radio memperbarui status pesan dalam folder Item Terkirim tanpa indikasi audio atau visual apa pun.

Jika radio berganti mode atau mati sebelum status pesan di Item Terkirim diperbarui, radio tidak akan dapat menyelesaikan pesan Dalam Proses apa pun dan otomatis menandainya dengan ikon **Gagal Terkirim**.

Radio mendukung maksimal lima pesan Sedang Berlangsung dalam satu waktu. Selama periode ini, radio tidak dapat mengirimkan pesan baru apa pun dan otomatis menandainya dengan ikon **Gagal Terkirim**.

5.3.19.5.3

Menghapus Semua Pesan Teks Terkirim dari Item Terkirim

1 Akses fitur **Pesan Teks**.

Kontrol Radio	Langkah
Tombol Pesan Teks terprogram	Tekan tombol **Pesan Teks** terprogram.
Menu	**a** Tekan OK untuk mengakses menu. **b** Tekan ▲ atau ▼ ke `Pesan` dan tekan OK untuk memilih.

2 Tekan ▲ atau ▼ ke `Item Terkirim` dan tekan OK untuk memilih.

Jika Anda memilih `Item Terkirim` yang tidak memiliki pesan teks, layar akan menampilkan `Daftar Kosong`, dan nada rendah akan berbunyi jika Nada Keypad diaktifkan.

3 Tekan ▲ atau ▼ ke `Hapus Semua` dan tekan OK untuk memilih.

4 Lakukan salah satu hal berikut.

- Tekan ▲ atau ▼ ke Ya dan tekan OK untuk memilih. Layar menampilkan pemberitahuan mini positif.
- Tekan ▲ atau ▼ ke Tidak dan tekan OK untuk kembali ke layar sebelumnya.

5.3.19.6

Menerima Pesan Teks

Ketika radio Anda menerima pesan, layar menampilkan Daftar Notifikasi dengan alias atau ID pengirim dan ikon Pesan.

Anda bisa memilih salah satu dari opsi berikut ini ketika menerima pesan teks:

- Baca
- Baca Nanti
- Hapus

5.3.19.7

Membaca Pesan Teks

1 Tekan ▲ atau ▼ ke Baca? dan tekan OK untuk memilih.

Pesan yang dipilih di Kotak Masuk terbuka.

2 Lakukan salah satu langkah berikut:

- Tekan OK untuk kembali ke Kotak Masuk.
- Tekan OK sekali lagi untuk membalas, meneruskan, atau menghapus pesan teks.

5.3.19.8

Mengelola Pesan Teks yang Diterima

Gunakan Kotak Masuk untuk mengelola pesan teks Anda. Kotak Masuk dapat menyimpan maksimal 30 pesan.

Pesan Teks di Kotak Masuk diurutkan menurut yang paling baru dibaca.

Radio Anda mendukung opsi berikutnya untuk pesan teks:

- Balas (melalui Teks Cepat)

- Putar Maju
- Hapus
- Hapus Semua

PEMBERITAHUAN:
Jika jenis saluran tidak cocok, Anda hanya dapat meneruskan, menghapus, atau menghapus semua pesan yang Diterima.

Untuk kembali ke layar Awal, tekan lama kapan saja.

5.3.19.8.1

Melihat Pesan Teks dari Kotak Masuk

1 Tekan OK untuk mengakses menu.

2 Tekan atau ke Pesan dan tekan OK untuk memilih.

3 Tekan atau ke Kotak Masuk dan tekan OK untuk memilih.

4 Tekan atau untuk melihat pesan.

5 Lakukan salah satu langkah berikut:

- Tekan OK untuk memilih pesan saat ini, dan tekan OK lagi untuk membalas, meneruskan, atau menghapus pesan tersebut.
- Tekan lama untuk kembali ke layar Awal.

5.3.19.8.2

Membalas Pesan Teks dari Kotak Masuk

1 Akses fitur **Pesan Teks**.

Kontrol Radio	Langkah
Tombol Pesan Teks terprogram	Tekan tombol **Pesan Teks** terprogram.

Kontrol Radio	Langkah
Menu	**a** Tekan OK untuk mengakses menu. **b** Tekan ▲ atau ▼ ke `Pesan` dan tekan OK untuk memilih.

2 Tekan ▲ atau ▼ ke `Kotak Masuk` dan tekan OK untuk memilih.

3 Tekan ▲ atau ▼ ke pesan yang diinginkan dan tekan OK untuk memilih.

4 Tekan OK sekali lagi untuk mengakses submenu.

5 Gunakan keypad untuk menulis/mengedit pesan Anda.

6 Tekan OK setelah selesai membuat pesan.

Layar akan menampilkan `Mengirim Pesan`, yang mengonfirmasikan bahwa pesan Anda sedang dikirim.

Jika pesan berhasil dikirim, nada akan berbunyi dan layar akan menampilkan `Pesan Terkirim`.

Jika pesan tidak dapat dikirim, sebuah nada rendah akan berbunyi dan layar akan menampilkan `Kirim Pesan Gagal`.

Jika pesan teks tidak terkirim, radio mengembalikan Anda ke layar opsi `Kirim Ulang` (lihat Mengelola Pesan Teks yang Gagal Terkirim di halaman 311).

5.3.19.8.3

Menghapus Pesan Teks dari Kotak Masuk

1 Akses fitur **Pesan Teks**.

Kontrol Radio	Langkah
Tombol Pesan Teks terprogram	Tekan tombol **Pesan Teks** terprogram.
Menu	**a** Tekan OK untuk mengakses menu. **b** Tekan ▲ atau ▼ ke `Pesan` dan tekan OK untuk memilih.

2 Tekan ▲ atau ▼ ke `Kotak Masuk` dan tekan OK untuk memilih.

3 Tekan ▲ atau ▼ ke pesan yang diinginkan dan tekan OK untuk memilih.

4 Tekan OK sekali lagi untuk mengakses submenu.

5 Tekan ▲ atau ▼ ke `Hapus` dan tekan OK untuk memilih.

6 Tekan ▲ atau ▼ ke `Ya` dan tekan OK untuk memilih.

Layar menampilkan `Pesan Dihapus`, dan layar kembali ke Kotak Masuk.

5.3.19.8.4

Menghapus Semua Pesan Teks dari Kotak Masuk

1 Akses fitur **Pesan Teks**.

Kontrol Radio	Langkah
Tombol Pesan Teks terprogram	Tekan tombol **Pesan Teks** terprogram.
Menu	**a** Tekan OK untuk mengakses menu.

Kontrol Radio	Langkah
	b Tekan ▲ atau ▼ ke `Pesan` dan tekan OK untuk memilih.

2 Tekan ▲ atau ▼ ke `Kotak Masuk` dan tekan OK untuk memilih.

Bila Anda memilih `Kotak Masuk` yang tidak memiliki pesan teks, `Daftar Kosong` akan ditampilkan di layar dan nada rendah akan berbunyi jika Nada Keypad diaktifkan (lihat Mengaktifkan atau Menonaktifkan Nada Keypad di halaman 221).

3 Tekan ▲ atau ▼ ke `Hapus Semua` dan tekan OK untuk memilih.

4 Tekan ▲ atau ▼ ke `Ya` dan tekan OK untuk memilih.

Layar akan menampilkan `Kotak Masuk Dibersihkan`.

5.3.20

Privasi

Jika diaktifkan, fitur ini membantu mencegah pengguna yang tidak sah menguping pada saluran dengan menggunakan solusi pengacakan berbasis perangkat lunak. Transmisi pengiriman sinyal dan identifikasi pengguna tidak diacak.

Privasi pada radio Anda harus diaktifkan pada posisi pemilih saluran saat ini untuk mengirim transmisi dengan privasi diaktifkan, meskipun ini bukan persyaratan yang perlu untuk menerima transmisi. Ketika berada pada posisi pemilih saluran dengan privasi diaktifkan, radio masih bisa menerima transmisi (tidak diacak) dengan jelas.

Radio Anda mendukung Privasi yang Disempurnakan.

Untuk menguraikan transmisi panggilan dengan privasi diaktifkan, radio Anda harus diprogram agar mempunyai Nilai Kunci dan ID Kunci (untuk Privasi yang

Disempurnakan) yang sama dengan radio yang mengirim transmisi.

Jika radio Anda menerima panggilan diacak yang berasal dari Nilai Kunci dan ID Kunci yang berbeda, Anda tidak akan mendengar apa pun (Privasi yang Disempurnakan).

Jika salah satu jenis privasi ditetapkan pada radio, ikon aman atau tidak aman akan tampil di layar Awal, kecuali saat radio sedang mengirim atau menerima Panggilan darurat atau alarm.

Lampu LED menyala hijau terus ketika radio bertransmisi dan berkedip hijau dengan cepat apabila radio menerima transmisi keluar dengan privasi diaktifkan.

Anda dapat mengakses fitur ini dengan melakukan salah satu dari tindakan berikut ini:

- Tekan tombol terprogram **Privasi** untuk mengaktifkan atau menonaktifkan privasi.
- Menggunakan Menu Radio sebagaimana digambarkan oleh langkah-langkah yang dijelaskan berikut.

PEMBERITAHUAN:
Beberapa model radio mungkin tidak menawarkan fitur Privasi ini. Tanyakan kepada penyalur atau administrator sistem Anda untuk informasi lebih lanjut.

1. Tekan OK untuk mengakses menu.
2. Tekan ▲ atau ▼ ke `Utilitas` dan tekan OK untuk memilih.
3. Tekan ▲ atau ▼ ke `Pengaturan Radio` atau ▲ atau ▼ ke `Connect Plus` dan tekan OK untuk memilih.
4. Tekan ▲ atau ▼ ke `Privasi yang Disempurnakan`.

   Jika layar menampilkan `Hidupkan`, tekan OK untuk mengaktifkan Privasi. Radio menampilkan pesan yang mengonfirmasi pilihan Anda.

Jika layar menampilkan Matikan, tekan OK untuk menonaktifkan Privasi. Radio menampilkan pesan yang mengonfirmasi pilihan Anda.

Jika radio menetapkan salah satu jenis privasi, ikon aman atau tidak aman akan tampil di panel status, kecuali saat radio sedang mengirim atau menerima Panggilan darurat atau alarm.

5.3.20.1

Melakukan Panggilan dengan Privasi Diaktifkan (Acak)

Aktifkan privasi menggunakan tombol privasi yang diprogram atau menggunakan menu. Radio Anda harus memiliki fitur Privasi yang diaktifkan untuk posisi saluran yang saat ini terpilih guna mengirim transmisi dengan privasi diaktifkan. Saat privasi diaktifkan untuk posisi saluran yang saat ini terpilih, semua transmisi suara yang dilakukan radio Anda akan diacak. Hal ini meliputi Panggilan Grup, Panggilan Multigrup, talk-back selama panggilan terpindai, Semua Panggilan Site, Panggilan Darurat, dan Panggilan Pribadi. Hanya radio penerima dengan Nilai Kunci dan ID Kunci yang sama dengan radio Anda yang akan dapat mengurai transmisi.

5.3.21

Dukungan

Anda bisa mengaktifkan atau menonaktifkan radio mana pun di sistem. Misalnya, Anda mungkin perlu menonaktifkan radio yang dicuri, untuk mencegah pencuri menggunakannya, dan mengaktifkan radio itu, ketika sudah kembali ke tangan Anda.

PEMBERITAHUAN:
Melakukan Penonaktifan dan Pengaktifan Radio terbatas pada radio yang sudah mengaktifkan fungsi ini. Tanyakan kepada penyalur atau administrator sistem Anda untuk informasi lebih lanjut.

5.3.21.1

Penonaktifan Radio

1 Anda dapat mengakses fitur ini dengan melakukan salah satu dari tindakan berikut:

Kontrol Radio	Langkah
Tombol Penonaktifan Radio	**a** Tekan tombol **Penonaktifan Radio** terprogram. **b** Tekan ▲ atau ▼ ke alias atau ID yang diperlukan dan tekan OK untuk memilih.
Menu radio	**a** Tekan OK untuk mengakses menu. **b** Tekan ▲ atau ▼ ke `Kontak` dan tekan OK untuk memilih. Entri diurutkan berdasar abjad. **c** Gunakan salah satu langkah yang digambarkan berikut untuk memilih alias atau ID subscriber yang diperlukan:

Kontrol Radio	Langkah

	• Pilih alias atau ID yang diinginkan secara langsung.
	  • Tekan ▲ atau ▼ ke alias atau ID yang diperlukan dan tekan OK untuk memilih.
	• Gunakan menu `Panggilan Manual`.
	  • Tekan ▲ atau ▼ ke `Panggilan Manual` dan tekan OK untuk memilih.
	  • Tekan ▲ atau ▼ ke `Nomor Radio` dan tekan OK untuk memilih.

Kontrol Radio	Langkah
	• Baris pertama layar menampilkan `Radio Number:` (Nomor Radio:). Baris kedua layar menampilkan kursor yang berkedip. Gunakan keypad untuk memasukkan alias atau ID subscriber dan tekan OK . **d** Tekan ▲ atau ▼ ke `Penonaktifan Radio` dan tekan OK untuk memilih.

Layar menampilkan `Penonaktifan Radio: <Alias atau ID Target>` dan LED berkedip hijau.

2 Tunggu respons.

Jika berhasil, nada indikator positif akan berbunyi dan layar akan menampilkan `Penonaktifan Radio Berhasil.`

Jika tidak berhasil, nada indikator negatif akan berbunyi dan layar akan menampilkan pesan `Penonaktifan Radio Gagal.`

5.3.21.2
Pengaktifan Radio

1 Anda dapat mengakses fitur ini dengan melakukan salah satu dari tindakan berikut:

Kontrol Radio	Langkah
Tombol Pengaktifan Radio	**a** Tekan tombol **Pengaktifan Radio** yang terprogram. **b** Tekan ▲ atau ▼ ke alias atau ID yang

Kontrol Radio	Langkah
	diperlukan dan tekan OK untuk memilih.
Menu radio	**a** Tekan OK untuk mengakses menu. **b** Tekan ▲ atau ▼ ke `Kontak` dan tekan OK untuk memilih. Entri diurutkan berdasar abjad. **c** Gunakan salah satu langkah yang digambarkan berikut untuk memilih alias atau ID subscriber yang diperlukan • Pilih alias atau ID yang diinginkan secara langsung.

Kontrol Radio	Langkah
	• Tekan ▲ atau ▼ ke alias atau ID yang diperlukan dan tekan OK untuk memilih. • Gunakan menu `Panggilan Manual`. • Tekan ▲ atau ▼ ke `Panggilan Manual` dan tekan OK untuk memilih. • Tekan ▲ atau ▼ ke `Nomor Radio`

Kontrol Radio	Langkah
	dan tekan OK untuk memilih. • Baris pertama layar menampilkan `Radio Number:` (Nomor Radio:). Baris kedua layar menampilkan kursor yang berkedip. Gunakan keypad untuk memasukkan alias atau ID subscriber dan tekan OK .

Kontrol Radio	Langkah
	d Tekan ▲ atau ▼ ke `Pengaktifan Radio` dan tekan OK untuk memilih.

Layar menampilkan `Pengaktifan Radio: <Alias atau ID Subscriber>` dan LED hijau menyala terus-menerus.

2 Tunggu respons.

Jika berhasil, sebuah nada indikator positif akan berbunyi dan layar akan menampilkan `Pengaktifan Radio Berhasil.`

Jika tidak berhasil, sebuah nada indikator negatif akan berbunyi dan layar akan menampilkan `Pengaktifan Radio Gagal.`

5.3.22

Pengoperasian Bluetooth

PEMBERITAHUAN:
Jika dinonaktifkan via CPS, semua fitur terkait Bluetooth akan dinonaktifkan dan database perangkat Bluetooth dihapus.

Fitur ini memungkinkan Anda menggunakan radio dengan perangkat yang mendukung Bluetooth (aksesori) melalui sambungan nirkabel Bluetooth. Radio mendukung perangkat Bluetooth dari Motorola Solutions dan COTS (Commercially available Off-The-Shelf).

Bluetooth beroperasi dalam jarak pandang sejauh 10 meter (32 kaki). Ini adalah jalur tanpa hambatan antara radio Anda dan perangkat berkemampuan Bluetooth.

Sebaiknya jangan tinggalkan radio Anda dan berharap perangkat berkemampuan Bluetooth Anda berfungsi dengan sangat andal ketika terpisah jauh.

Di area batas penerimaan, kualitas suara dan nada akan mulai terdengar "samar" atau "terputus-putus". Untuk mengatasi masalah ini, letakkan radio dan perangkat yang mendukung Bluetooth lebih berdekatan (dalam rentang 10 meter/32 kaki yang telah dijelaskan) untuk mendapatkan kembali penerimaan audio yang jernih. Fungsi Bluetooth radio memiliki daya maksimum sebesar 2,5 mW (4 dBm) dalam jangkauan 10 meter/32 kaki.

Radio dapat mendukung maksimum 4 sambungan Bluetooth secara bersamaan dengan perangkat Bluetooth dari jenis yang berbeda. Misalnya, headset, dan POD (PTT-Only Device).

Lihat panduan pengguna perangkat berkemampuan Bluetooth terkait untuk detail lebih lanjut tentang kapabilitas perangkat berkemampuan Bluetooth Anda secara lengkap.

5.3.22.1

Mengaktifkan dan Menonaktifkan Bluetooth

1. Tekan OK untuk mengakses menu.
2. Tekan ▲ atau ▼ ke `Bluetooth` dan tekan OK untuk memilih.

3 Tekan ▲ atau ▼ ke Status Saya dan tekan OK untuk memilih.

Layar akan menampilkan Aktif dan Nonaktif. Status saat ini ditunjukkan oleh ✓.

4 Lakukan salah satu langkah berikut:

- Tekan ▲ atau ▼ ke Aktif dan tekan OK untuk memilih. Layar menampilkan Aktif dan ✓ muncul di sebelah kiri status terpilih.
- Tekan ▲ atau ▼ ke Nonaktif dan tekan OK untuk memilih. Layar menampilkan Nonaktif dan ✓ muncul di sebelah kiri status terpilih.

5.3.22.2

Mencari dan Menyambung ke Perangkat Bluetooth

Jangan menonaktifkan perangkat dengan dukungan Bluetooth atau menekan ⏎ saat pencarian dan operasi penyambungan berlangsung karena dapat membatalkan operasi.

1 Hidupkan perangkat berkemampuan Bluetooth dan alihkan ke mode pasangan. Lihat panduan pengguna untuk perangkat berkemampuan Bluetooth terkait.

2 Pada radio, tekan tombol OK untuk mengakses menu.

3 Tekan ▲ atau ▼ ke Bluetooth dan tekan OK untuk memilih.

4 Tekan ▲ atau ▼ ke Perangkat dan tekan OK untuk memilih.

5 Lakukan salah satu langkah berikut:

- Tekan ▲ atau ▼ ke perangkat yang diinginkan dan tekan OK untuk memilih.

- Tekan ▲ atau ▼ ke `Cari Perangkat` untuk mencari perangkat yang tersedia. Tekan ▲ atau ▼ ke perangkat yang diinginkan dan tekan OK untuk memilih.

6 Tekan ▲ atau ▼ ke `Hubungkan` dan tekan OK untuk memilih.

Layar menampilkan `Menghubungkan ke <Perangkat>`. Perangkat berkemampuan Bluetooth mungkin memerlukan langkah-langkah tambahan untuk menyelesaikan pemasangan. Lihat panduan pengguna untuk perangkat berkemampuan Bluetooth terkait.

Jika berhasil, layar radio menampilkan `<Perangkat>Tersambung`. Nada berbunyi dan ✓ muncul di sebelah perangkat yang tersambung. Ikon Bluetooth Tersambung akan ditampilkan di panel status.

Jika tidak berhasil, layar radio menampilkan `Gagal Menghubungkan`.

5.3.22.3

Mencari dan Menyambung dari Perangkat Bluetooth (Mode Dapat Ditemukan)

Jangan mematikan Bluetooth atau radio saat pencarian dan operasi penyambungan berlangsung karena dapat membatalkan operasi.

1 Aktifkan Bluetooth.

Lihat Mengaktifkan dan Menonaktifkan Bluetooth di halaman 326 .

2 Tekan OK untuk mengakses menu.

3 Tekan ▲ atau ▼ ke `Bluetooth` dan tekan OK untuk memilih.

4 Tekan ▲ atau ▼ ke `Temukan Saya` dan tekan OK untuk memilih.

Sekarang radio dapat ditemukan oleh perangkat berkemampuan Bluetooth untuk durasi yang diprogram. Ini disebut Mode Dapat Ditemukan.

5 Hidupkan perangkat berkemampuan Bluetooth, lalu pasangkan dengan radio.

Lihat panduan pengguna untuk perangkat berkemampuan Bluetooth terkait.

5.3.22.4

Memutuskan Sambungan dari Perangkat Bluetooth

1 Pada radio, tekan OK untuk mengakses menu.

2 Tekan ▲ atau ▼ ke `Bluetooth` dan tekan OK untuk memilih.

3 Tekan ▲ atau ▼ ke `Perangkat` dan tekan OK untuk memilih.

4 Tekan ▲ atau ▼ ke perangkat yang diinginkan dan tekan OK untuk memilih.

5 Tekan ▲ atau ▼ ke `Putuskan Sambungan` dan tekan OK untuk memilih.

Layar menampilkan `Memutuskan sambungan dari <Perangkat>`. Perangkat berkemampuan Bluetooth Anda mungkin memerlukan langkah tambahan untuk memutuskan sambungan. Lihat panduan pengguna untuk perangkat berkemampuan Bluetooth terkait.

Layar radio menampilkan `<Perangkat> Terputus`. Nada indikator positif akan berbunyi dan tanda ✓ akan hilang dari samping perangkat yang tersambung. Ikon Bluetooth Tersambung akan hilang pada panel status.

5.3.22.5

Mengalihkan Rute Audio antara Speaker Radio Internal dan Perangkat Bluetooth

Anda bisa mengalihkan rute audio antara speaker radio internal dan eksternal pada aksesori berkemampuan Bluetooth.

Tekan tombol terprogram **Sakelar Audio Bluetooth**.

- Nada akan berbunyi dan layar rmenampilkan `Arahkan Audio ke Radio`.
- Nada akan berbunyi dan layar menampilkan `Arahkan Audio ke Bluetooth`.

5.3.22.6

Melihat Detail Perangkat

1 Tekan OK untuk mengakses menu.

2 Tekan ▲ atau ▼ ke `Bluetooth` dan tekan OK untuk memilih.

3 Tekan ▲ atau ▼ ke `Perangkat` dan tekan OK untuk memilih.

4 Tekan ▲ atau ▼ ke perangkat yang diinginkan dan tekan OK untuk memilih.

5 Tekan ▲ atau ▼ ke `Lihat Detail` dan tekan OK untuk memilih.

5.3.22.7

Menghapus Nama Perangkat

Anda dapat menghapus perangkat yang diputus sambungannya dari daftar perangkat berkemampuan Bluetooth.

1 Tekan OK untuk mengakses menu.

2 Tekan ▲ atau ▼ ke `Bluetooth` dan tekan OK untuk memilih.

3 Tekan ▲ atau ▼ ke `Perangkat` dan tekan OK untuk memilih.

4 Tekan ▲ atau ▼ ke perangkat yang diinginkan dan tekan OK untuk memilih.

5 Tekan ▲ atau ▼ ke `Hapus` dan tekan OK untuk memilih.

Layar menampilkan `Perangkat Dihapus`.

5.3.22.8

Penguatan Mikrofon Bluetooth

Memungkinkan kontrol pada nilai penguatan mikrofon dari perangkat berkemampuan Bluetooth.

1 Tekan OK untuk mengakses menu.

2 Tekan ▲ atau ▼ ke `Bluetooth` dan tekan OK untuk memilih.

3 Tekan ▲ atau ▼ ke `Penguatan Mik BT` dan tekan OK untuk memilih.

4 Tekan ▲ atau ▼ ke jenis Penguatan Mik BT dan nilai saat ini.

Untuk mengedit nilai, tekan OK untuk memilih.

5 Tekan ▲ atau ▼ untuk menaikkan atau menurunkan nilai dan tekan OK untuk memilih.

5.3.23

Lokasi Dalam Ruangan

PEMBERITAHUAN:
Fitur Lokasi Dalam Ruangan hanya berlaku untuk model dengan perangkat lunak dan perangkat keras terbaru. Tanyakan kepada dealer atau administrator sistem Anda untuk informasi selengkapnya.

Lokasi Dalam Ruangan digunakan untuk terus melacak lokasi pengguna radio. Apabila Lokasi Dalam Ruangan diaktifkan, radio berada dalam mode dapat ditemukan

terbatas. Suar terdedikasi digunakan untuk menemukan lokasi radio dan menentukan posisinya.

5.3.23.1

Mengaktifkan atau Menonaktifkan Lokasi Dalam Ruangan

Anda dapat mengaktifkan atau menonaktifkan Lokasi Dalam Ruangan dengan melakukan satu tindakan berikut ini.

- Akses fitur ini melalui menu.

  a. Tekan OK untuk mengakses menu.

  b. Tekan ▲ atau ▼ ke `Bluetooth` dan tekan OK untuk memilih.

  c. Tekan ▲ atau ▼ ke `Lokasi Dalam Ruangan` dan tekan OK untuk memilih.

  d. Tekan OK untuk mengaktifkan Lokasi Dalam Ruangan.

  Layar menampilkan `Lokasi Dalam Ruangan Aktif`. Anda mendengarkan nada indikator positif.
  Salah satu skenario berikut ini akan terjadi.

  - Jika berhasil, ikon Lokasi Dalam Ruangan Tersedia akan muncul di tampilan layar Awal.
  - Jika tidak berhasil, layar menampilkan `Pengaktifan Gagal`. Anda mendengarkan nada indikator negatif.

  e. Tekan OK untuk menonaktifkan Lokasi Dalam Ruangan.

  Layar menampilkan `Lokasi Dalam Ruangan Nonaktif`. Anda mendengarkan nada indikator positif.
  Salah satu skenario berikut ini akan terjadi.

  - Jika berhasil, ikon Lokasi Dalam Ruangan Tersedia akan hilang dari tampilan layar Awal.

- Jika tidak berhasil, layar menampilkan `Penonaktifan Gagal`. Anda mendengarkan nada indikator negatif.

- Akses fitur ini menggunakan tombol terprogram.
  a. Tekan lama tombol **Lokasi Dalam Ruangan** terprogram untuk mengaktifkan Lokasi Dalam Ruangan.

     Layar menampilkan `Lokasi Dalam Ruangan Aktif`. Anda mendengarkan nada indikator positif.
     Salah satu skenario berikut ini akan terjadi.
     - Jika berhasil, ikon Lokasi Dalam Ruangan Tersedia akan muncul di tampilan layar Awal.
     - Jika tidak berhasil, layar menampilkan `Pengaktifan Gagal`. Jika tidak berhasil, Anda akan mendengar nada indikator negatif.

  b. Tekan tombol **Lokasi Dalam Ruangan** terprogram untuk menonaktifkan Lokasi Dalam Ruangan.

     Layar menampilkan `Lokasi Dalam Ruangan Nonaktif`. Anda mendengarkan nada indikator positif.
     Salah satu skenario berikut ini akan terjadi.
     - Jika berhasil, ikon Lokasi Dalam Ruangan Tersedia akan hilang dari tampilan layar Awal.
     - Jika tidak berhasil, layar menampilkan `Penonaktifan Gagal`. Jika tidak berhasil, Anda akan mendengar nada indikator negatif.

5.3.23.2

Mengakses Informasi Suar Lokasi Dalam Ruangan

Ikuti prosedur untuk mengakses informasi suar Lokasi Dalam Ruangan.

1. Tekan OK untuk mengakses menu.
2. Tekan ▲ atau ▼ ke `Bluetooth` dan tekan OK untuk memilih.
3. Tekan ▲ atau ▼ ke `Lokasi Dalam Ruangan` dan tekan OK untuk memilih.

4 Tekan ▲ atau ▼ ke Suar dan tekan OK untuk memilih.

Layar menampilkan informasi suar.

5.3.24

Daftar Notifikasi

Radio Anda memiliki Daftar Notifikasi yang mengumpulkan semua kejadian "belum dibaca" Anda di saluran, seperti pesan teks yang belum dibaca, panggilan tak terjawab, dan peringatan panggilan.

Ikon Pemberitahuan muncul di bilah status ketika Daftar Notifikasi mencatat satu atau lebih kejadian.

Daftar ini mendukung maksimal 40 kejadian tak terbaca. Bila penuh, kejadian berikutnya otomatis menggantikan kejadian terlama.

PEMBERITAHUAN:
Setelah kejadian dibaca, kejadian dihapus dari Daftar Pemberitahuan.

5.3.24.1

Mengakses Daftar Pemberitahuan

Ikuti prosedur untuk mengakses daftar notifikasi.

1 Tekan OK untuk mengakses menu.

2 Tekan ▲ atau ▼ ke Notifikasi dan tekan OK untuk memilih.

3 Tekan ▲ atau ▼ ke aktivitas yang diinginkan dan tekan OK untuk memilih.

Tekan lama untuk kembali ke layar Awal.

5.3.25

Pengoperasian Wi-Fi

Fitur ini memungkinkan Anda mengatur dan terhubung ke jaringan Wi-Fi. Wi-Fi mendukung pembaruan untuk

firmware, codeplug, dan sumber daya radio seperti paket bahasa dan pengumuman suara.

PEMBERITAHUAN:
Fitur ini hanya berlaku untuk XiR M8668i/CM7668i saja.

Wi-Fi® adalah merek dagang terdaftar dari Wi-Fi Alliance®.

Radio Anda mendukung WEP/WPA/WPA2-Personal dan jaringan Wi-Fi WPA/WPA2-Enterprise.

Jaringan Wi-Fi WEP/WPA/WPA2-Personal
Menggunakan autentikasi berbasis kunci (kata sandi) yang dibagikan sebelumnya.

Kunci yang dibagikan sebelumnya bisa dimasukkan menggunakan menu atau CPS/RM.

Jaringan Wi-Fi WPA/WPA2-Enterprise
Menggunakan autentikasi berbasis sertifikat.

Radio Anda harus dikonfigurasikan terlebih dahulu dengan sertifikat.

PEMBERITAHUAN:
Tanyakan kepada dealer atau administrator sistem Anda untuk terhubung ke jaringan Wi-Fi WPA/WPA2-Enterprise.

Tombol terprogram **Wi-Fi Aktif atau Nonaktif** dialokasikan oleh dealer atau administrator sistem Anda. Tanyakan kepada dealer atau administrator sistem Anda untuk mengetahui bagaimana radio Anda diprogram.

Pengumuman Suara untuk tombol terprogram **Wi-Fi Aktif atau Nonaktif** dapat disesuaikan melalui CPS sesuai dengan kebutuhan pengguna. Tanyakan kepada dealer atau administrator sistem Anda untuk informasi selengkapnya.

PEMBERITAHUAN:
Anda dapat mengaktifkan atau menonaktifkan Wi-Fi dari jarak jauh menggunakan radio yang ditentukan (lihat Mengaktifkan atau Menonaktifkan Wi-Fi dari Jarak Jauh Menggunakan Radio Khusus (Kontrol Individu) di halaman 211 dan Mengaktifkan atau Menonaktifkan Wi-Fi dari Jarak Jauh Menggunakan Radio Khusus (Kontrol Grup) di halaman 212). Tanyakan kepada dealer atau administrator sistem Anda untuk informasi selengkapnya.

5.3.25.1
Mengaktifkan atau Menonaktifkan Wi-Fi

1. Tekan tombol **Wi-Fi Aktif atau Nonaktif** terprogram. Pengumuman Suara berbunyi ketika Wi-Fi Diaktifkan atau Wi-Fi Dinonaktifkan.

2 Akses fitur ini menggunakan menu.

a Tekan OK untuk mengakses menu.

b Tekan ▲ atau ▼ ke WiFi dan tekan OK untuk memilih.

c Tekan ▲ atau ▼ ke WiFi Aktif dan tekan OK untuk memilih.

d Tekan OK untuk mengaktifkan/menonaktifkan Wi-Fi.

Jika Wi-Fi diaktifkan, layar akan menampilkan ✓ di sebelah Diaktifkan.

Jika Wi-Fi dinonaktifkan, ✓ hilang dari sebelah Diaktifkan.

5.3.25.2

Mengaktifkan atau Menonaktifkan Wi-Fi dari Jarak Jauh Menggunakan Radio Khusus (Kontrol Individu)

Anda dapat mengaktifkan atau menonaktifkan Wi-Fi dari jarak jauh di Kontrol Individu (Satu ke Satu).

PEMBERITAHUAN:
Hanya radio dengan pengaturan CPS khusus yang mendukung fungsi ini, tanyakan kepada dealer atau administrator sistem Anda untuk informasi lebih lanjut.

1 Lakukan salah satu langkah berikut:

- Tekan lama tombol yang dapat diprogram. Gunakan keypad untuk memasukkan ID, dan tekan OK untuk memilih. Lanjutkan ke langkah 3.
- Tekan OK untuk mengakses menu.

2 Tekan ▲ atau ▼ ke Kontak dan tekan OK untuk memilih.

3 Tekan ▲ atau ▼ ke `Kontrol WiFi` dan tekan OK untuk memilih.

4 Tekan ▲ atau ▼ untuk memilih `Nyala` atau `Mati`.

5 Tekan OK untuk memilih.

Jika berhasil, layar menampilkan pemberitahuan mini positif.

Jika gagal, layar menampilkan pemberitahuan mini negatif.

5.3.25.3

Mengaktifkan atau Menonaktifkan Wi-Fi dari Jarak Jauh Menggunakan Radio Khusus (Kontrol Grup)

Anda dapat mengaktifkan atau menonaktifkan Wi-Fi dari jarak jauh di Kontrol Grup (Satu ke Banyak).

PEMBERITAHUAN:
Hanya radio dengan pengaturan CPS khusus yang mendukung fungsi ini, tanyakan kepada dealer atau administrator sistem Anda untuk informasi lebih lanjut.

1 Tekan OK untuk mengakses menu.

2 Tekan ▲ atau ▼ ke `Kontak` dan tekan OK untuk memilih.

3 Tekan ▲ atau ▼ untuk memilih alias atau ID subscriber yang diinginkan.

4 Tekan ▲ atau ▼ ke `Kontrol WiFi` dan tekan OK untuk memilih.

5 Tekan ▲ atau ▼ untuk memilih `Nyala` atau `Mati`.

6 Tekan OK untuk memilih.

Jika berhasil, layar menampilkan `Berhasil Dikirim`.

Jika gagal, layar menampilkan pemberitahuan mini negatif.

5.3.25.4

Menghubungkan ke Titik Akses Jaringan

Ketika Wi-Fi diaktifkan, radio memindai dan menghubungkan ke titik akses jaringan.

PEMBERITAHUAN:
Anda juga dapat menghubungkan ke titik akses jaringan menggunakan menu.

Titik akses jaringan Wi-Fi WPA-Enterprise telah dikonfigurasikan sebelumnya. Tanyakan kepada dealer atau administrator sistem Anda untuk mengetahui bagaimana radio Anda diprogram.

1 Tekan OK untuk mengakses menu.

2 Tekan ▲ atau ▼ ke `WiFi` dan tekan OK untuk memilih.

3 Tekan ▲ atau ▼ ke `Jaringan` dan tekan OK untuk memilih.

4 Tekan ▲ atau ▼ ke titik akses jaringan dan tekan OK untuk memilih.

PEMBERITAHUAN:
Untuk Wi-Fi WPA-Enterprise, jika titik akses jaringan tidak dikonfigurasikan sebelumnya, opsi `Hubungkan` tidak tersedia.

5 Tekan ▲ atau ▼ ke `Hubungkan` dan tekan OK untuk memilih.

6 Untuk Wi-Fi WPA-Personal, masukkan kata sandi dan tekan OK .

7 Untuk Wi-Fi WPA-Enterprise, kata sandi dikonfigurasikan dengan RM.

Jika kata sandi yang dikonfigurasikan sebelumnya benar, radio Anda otomatis akan terhubung ke titik akses jaringan yang dipilih.

Jika kata sandi yang dikonfigurasikan sebelumnya salah, layar menampilkan `Autentikasi Gagal`, dan otomatis kembali ke menu sebelumnya.

Jika berhasil terhubung, radio menampilkan pemberitahuan dan titik akses jaringan disimpan ke dalam daftar profil.

Jika tidak berhasil terhubung, radio menampilkan layar pemberitahuan kegagalan sesaat dan otomatis kembali ke menu sebelumnya.

5.3.25.5

Memeriksa Status Koneksi Wi-Fi

Tekan tombol terprogram **Permintaan Status Wi-Fi** untuk mengetahui status koneksi menggunakan Pengumuman Suara. Pengumuman Suara berbunyi ketika Wi-Fi Dinonaktifkan, Wi-Fi Diaktifkan, tetapi tidak untuk Tidak Ada Koneksi atau Wi-Fi Aktif dengan Koneksi.

- Layar menampilkan `WiFi Nonaktif` saat Wi-Fi nonaktif.
- Layar menampilkan `WiFi Aktif, Tersambung` saat radio tersambung ke jaringan.
- Layar menampilkan `WiFi Aktif, Terputus` saat Wi-Fi aktif tetapi radio tidak tersambung ke jaringan.

Pengumuman Suara untuk hasil kueri status Wi-Fi dapat dikustomisasi lewat CPS sesuai dengan kebutuhan pengguna. Tanyakan kepada dealer atau administrator sistem Anda untuk informasi selengkapnya.

PEMBERITAHUAN:
Tombol terprogram **Kueri Status Wi-Fi** dialokasikan oleh dealer atau administrator sistem Anda. Tanyakan kepada dealer atau administrator sistem Anda untuk mengetahui bagaimana radio Anda diprogram.

5.3.25.6

Menyegarkan Daftar Jaringan

- Lakukan tindakan berikut ini untuk menyegarkan daftar jaringan melalui menu.

  a. Tekan OK untuk mengakses menu.

  b. Tekan ▲ atau ▼ ke WiFi dan tekan OK untuk memilih.

  c. Tekan ▲ atau ▼ ke Jaringan dan tekan OK untuk memilih.

  Ketika Anda masuk ke menu Jaringan, radio menyegarkan daftar jaringan secara otomatis.

- Jika Anda sudah berada di menu Jaringan, lakukan tindakan berikut ini untuk menyegarkan daftar jaringan.

  Tekan ▲ atau ▼ ke Segarkan dan tekan OK untuk memilih.

  Radio akan menyegarkan dan menampilkan daftar jaringan terbaru.

5.3.25.7

Menambahkan Jaringan

PEMBERITAHUAN:
Tugas ini tidak bisa diterapkan ke jaringan Wi-Fi WPA-Enterprise.

Jika jaringan yang dipilih tidak terdapat dalam daftar jaringan tersedia, lakukan tindakan berikut ini untuk menambahkan jaringan.

1. Tekan OK untuk mengakses menu.
2. Tekan ▲ atau ▼ ke WiFi dan tekan OK untuk memilih.
3. Tekan ▲ atau ▼ ke Jaringan dan tekan OK untuk memilih.
4. Tekan ▲ atau ▼ ke Tambah Jaringan dan tekan OK untuk memilih.

5 Masukkan Service Set Identifier (SSID) dan tekan OK .

6 Tekan atau ke Buka dan tekan OK untuk memilih.

7 Masukkan kata sandi dan tekan OK .

Radio menampilkan pemberitahuan mini positif untuk menunjukkan bahwa jaringan berhasil disimpan.

5.3.25.8

Melihat Detail Titik Akses Jaringan

Anda bisa melihat detail titik akses jaringan.

1 Tekan OK untuk mengakses menu.

2 Tekan atau ke WiFi dan tekan OK untuk memilih.

3 Tekan atau ke Jaringan dan tekan OK untuk memilih.

4 Tekan atau ke titik akses jaringan dan tekan OK untuk memilih.

5 Tekan atau ke Lihat Detail dan tekan OK untuk memilih.

PEMBERITAHUAN:
Wi-Fi WPA-Personal dan WPA-Enterprise menampilkan detail yang berbeda atas Titik Akses Jaringan.

Wi-Fi WPA-Personal

Untuk titik akses jaringan yang terhubung, radio Anda menampilkan Service Set Identifier (SSID), Security Mode, alamat Media Access Control (MAC), dan alamat Internet Protocol (IP).

Untuk titik akses jaringan yang tidak terhubung, radio Anda menampilkan SSID dan Security Mode.

Wi-Fi WPA-Enterprise

Untuk titik akses jaringan yang terhubung, radio Anda menampilkan SSID, Security Mode, Identity, Extended Authentication Protocol (EAP) Method, Phase 2 Authentication, Cert Name, alamat MAC, alamat IP, Gateway, DNS1, dan DNS2.

Untuk titik akses jaringan yang tidak terhubung, radio Anda menampilkan SSID, Security Mode, Identity, EAP Method, Phase 2 Authentication, dan Cert Name.

5.3.25.9

Menghapus Titik Akses Jaringan

PEMBERITAHUAN:
Tugas ini tidak bisa diterapkan ke jaringan Wi-Fi Enterprise.

Lakukan tindakan berikut ini untuk menghapus titik akses jaringan dari daftar profil.

1. Tekan OK untuk mengakses menu.
2. Tekan ▲ atau ▼ ke `WiFi` dan tekan OK untuk memilih.
3. Tekan ▲ atau ▼ ke `Jaringan` dan tekan OK untuk memilih.
4. Tekan ▲ atau ▼ ke titik akses jaringan yang dipilih dan tekan OK untuk memilih.
5. Tekan ▲ atau ▼ ke `Hapus` dan tekan OK untuk memilih.
6. Tekan ▲ atau ▼ ke `Ya` dan tekan OK untuk memilih.

   Radio menampilkan pemberitahuan mini positif untuk menunjukkan bahwa titik akses jaringan yang dipilih berhasil dihapus.

5.3.26

Utilitas

Bab ini menjelaskan pengoperasian fungsi utilitas yang terdapat di radio Anda.

5.3.26.1

Mengaktifkan atau Menonaktifkan Nada/Peringatan Radio

Anda dapat mengaktifkan dan menonaktifkan semua nada dan peringatan radio (kecuali untuk nada peringatan Darurat masuk) jika dibutuhkan.

Tekan tombol **Semua Nada/Peringatan** terprogram untuk mengaktifkan atau menonaktifkan semua nada, atau ikuti prosedur yang dijelaskan selanjutnya untuk mengakses fitur ini melalui menu radio.

1. Tekan OK untuk mengakses menu.
2. Tekan ▲ atau ▼ ke `Utilitas` dan tekan OK untuk memilih.
3. Tekan ▲ atau ▼ ke `Pengaturan Radio` dan tekan OK untuk memilih.
4. Tekan ▲ atau ▼ ke `Nada/Peringatan` dan tekan OK untuk memilih.
5. Tekan ▲ atau ▼ ke `Semua Nada` dan tekan OK untuk memilih.
6. Tekan OK untuk mengaktifkan/menonaktifkan semua nada dan peringatan.

   Layar menampilkan ✓ di sebelah `Diaktifkan`.

   Tanda ✓ hilang dari sebelah `Diaktifkan`.

5.3.26.2

Mengatur Tingkat Offset Volume Peringatan Nada

Anda dapat menyesuaikan tingkat Offset Volume Peringatan Nada jika dibutuhkan. Fitur ini menyesuaikan

volume nada/pemberitahuan, yang memungkinkannya lebih tinggi atau lebih rendah dibandingkan volume suara.

1 Tekan OK untuk mengakses menu.

2 Tekan ▲ atau ▼ ke `Utilitas` dan tekan OK untuk memilih.

3 Tekan ▲ atau ▼ ke `Pengaturan Radio` dan tekan OK untuk memilih.

4 Tekan ▲ atau ▼ ke `Nada/Peringatan` dan tekan OK untuk memilih.

5 Tekan ▲ atau ▼ ke `Offset Vol.` dan tekan OK untuk memilih.

6 Tekan ▲ atau ▼ ke nilai volume yang diperlukan.

Radio membunyikan nada umpan balik dengan masing-masing nilai volume yang terkait.

7 Lakukan salah satu langkah berikut:

- Tekan OK untuk menyimpan nilai volume suara yang diperlukan.
- Tekan untuk keluar tanpa mengubah pengaturan offset volume saat ini.

5.3.26.3

Mengaktifkan atau Menonaktifkan Nada Izin Bicara

Anda bisa mengaktifkan dan menonaktifkan Nada Izin Bicara jika dibutuhkan.

1 Tekan OK untuk mengakses menu.

2 Tekan ▲ atau ▼ ke Utilitas dan tekan OK untuk memilih.

3 Tekan ▲ atau ▼ ke Pengaturan Radio dan tekan OK untuk memilih.

4 Tekan ▲ atau ▼ ke Nada/Peringatan dan tekan OK untuk memilih.

5 Tekan ▲ atau ▼ ke Izin Bicara dan tekan OK untuk memilih.

6 Tekan OK untuk mengaktifkan/menonaktifkan Nada Izin Bicara.

Layar menampilkan ✓ di sebelah Diaktifkan.

Tanda ✓ hilang dari sebelah Diaktifkan.

5.3.26.4

Mengaktifkan atau Menonaktifkan Nada Tanda Hidup Radio

Anda dapat mengaktifkan dan menonaktifkan Nada Tanda Hidup jika diperlukan.

1 Tekan OK untuk mengakses menu.

2 Tekan ▲ atau ▼ ke Utilitas dan tekan OK untuk memilih.

3 Tekan ▲ atau ▼ ke Pengaturan Radio dan tekan OK untuk memilih.

4 Tekan ▲ atau ▼ ke Nada/Peringatan dan tekan OK untuk memilih.

5 Tekan ▲ atau ▼ ke Daya dan tekan OK untuk memilih.

6 Tekan OK untuk mengaktifkan/menonaktifkan Nada Peringatan Penyalaan.

Layar menampilkan ✓ di sebelah Diaktifkan.

Tanda ✓ hilang dari sebelah Diaktifkan.

5.3.26.5

Mengatur Tingkat Daya

Anda dapat mengubah setelan daya radio ke tinggi atau rendah untuk setiap zona Connect Plus.

Tinggi memungkinkan komunikasi dengan site menara dalam mode Connect Plus yang berada dalam jarak yang cukup jauh dari Anda. Rendah memungkinkan komunikasi dengan site menara pada mode Connect Plus dalam jarak lebih dekat.

Tekan tombol **Tingkat Daya** terprogram untuk beralih antara tingkat daya transmisi tinggi dan rendah.

Ikuti prosedur yang dijelaskan berikut ini untuk mengakses fitur ini melalui menu radio.

1 Tekan OK untuk mengakses menu.

2 Tekan ▲ atau ▼ ke Utilitas dan tekan OK untuk memilih.

3 Tekan ▲ atau ▼ ke Pengaturan Radio dan tekan OK untuk memilih.

4 Tekan ▲ atau ▼ ke Daya dan tekan OK untuk memilih.

5 Tekan ▲ atau ▼ ke pengaturan yang diperlukan dan tekan OK untuk memilih.

✓ muncul di samping setelan yang dipilih. Kapan saja, tekan lama ⏎ untuk kembali ke layar Awal.

Layar kembali ke menu sebelumnya.

5.3.26.6

Mengubah Mode Tampilan

Anda dapat mengubah mode tampilan radio antara Siang atau Malam jika diperlukan. Hal ini akan memengaruhi palet warna pada layar.

1 Tekan OK untuk mengakses menu.

2 Tekan ▲ atau ▼ ke `Utilitas` dan tekan OK untuk memilih.

3 Tekan ▲ atau ▼ ke `Pengaturan Radio` dan tekan OK untuk memilih.

4 Tekan ▲ atau ▼ ke `Layar` dan tekan OK untuk memilih.

Layar menampilkan `Mode Siang` dan `Mode Malam`.

5 Tekan ▲ atau ▼ ke pengaturan yang diinginkan dan tekan OK untuk mengaktifkan. ✓ muncul di sebelah pengaturan yang dipilih.

5.3.26.7

Menyesuaikan Kecerahan Layar

Anda dapat menyesuaikan kecerahan layar radio sesuai kebutuhan.

PEMBERITAHUAN:
Kecerahan layar tidak dapat disesuaikan bila Kecerahan Otomatis diaktifkan.

1 Tekan OK untuk mengakses menu.

2 Tekan ▲ atau ▼ ke `Utilitas` dan tekan OK untuk memilih.

3 Tekan ▲ atau ▼ ke `Pengaturan Radio` dan tekan OK untuk memilih.

4 Tekan ▲ atau ▼ ke Layar dan tekan OK untuk memilih.

5 Tekan ▲ atau ▼ ke Kecerahan dan tekan OK untuk memilih.

Layar menampilkan bilah kemajuan.

6 Kurangi kecerahan layar dengan menekan ▲ atau tambah kecerahan layar dengan menekan ▼. Pilih dari pengaturan 1 sampai 8. Tekan OK untuk mengonfirmasi entri Anda.

5.3.26.8

Mengaktifkan atau Menonaktifkan Layar Pengantar

Anda bisa mengaktifkan dan menonaktifkan Layar Pengantar jika dibutuhkan.

1 Tekan OK untuk mengakses menu.

2 Tekan ▲ atau ▼ ke Utilitas dan tekan OK untuk memilih.

3 Tekan ▲ atau ▼ ke Pengaturan Radio dan tekan OK untuk memilih.

4 Tekan ▲ atau ▼ ke Layar dan tekan OK untuk memilih.

5 Tekan ▲ atau ▼ ke Layar Intro dan tekan OK untuk memilih.

6 Tekan OK untuk mengaktifkan/menonaktifkan Layar Introduksi.

Layar menampilkan ✓ di sebelah Diaktifkan.

Tanda ✓ hilang dari sebelah Diaktifkan.

5.3.26.9

Bahasa

Anda bisa mengatur layar radio dengan bahasa yang diinginkan.

1. Tekan OK untuk mengakses menu.
2. Tekan ▲ atau ▼ ke `Utilitas` dan tekan OK untuk memilih.
3. Tekan ▲ atau ▼ ke `Pengaturan Radio` dan tekan OK untuk memilih.
4. Tekan ▲ atau ▼ ke `Bahasa` dan tekan OK untuk memilih.
5. Tekan ▲ atau ▼ ke bahasa yang diperlukan dan tekan OK untuk mengaktifkan. ✓ muncul di sebelah bahasa yang dipilih.

5.3.26.10

Mengaktifkan atau Menonaktifkan Indikator LED

Anda bisa mengaktifkan dan menonaktifkan Indikator LED jika dibutuhkan.

1. Tekan OK untuk mengakses menu.
2. Tekan ▲ atau ▼ ke `Utilitas` dan tekan OK untuk memilih.
3. Tekan ▲ atau ▼ ke `Pengaturan Radio` dan tekan OK untuk memilih.
4. Tekan ▲ atau ▼ ke `Indikator LED` dan tekan OK untuk memilih.
5. Tekan OK untuk mengaktifkan/menonaktifkan Indikator LED.

   Layar menampilkan ✓ di sebelah `Diaktifkan`.

Tanda ✓ hilang dari sebelah Diaktifkan.

5.3.26.11

Mengidentifikasi Jenis Kabel

Anda dapat memilih jenis kabel yang digunakan radio.

1 Tekan OK untuk mengakses menu.

2 Tekan ▲ atau ▼ ke Utilitas dan tekan OK untuk memilih.

3 Tekan ▲ atau ▼ ke Pengaturan Radio dan tekan OK untuk memilih.

4 Tekan ▲ atau ▼ ke Jenis Kabel dan tekan OK untuk memilih.

5 Jenis kabel saat ini akan ditandai dengan ✓.

5.3.26.12

Pengumuman Suara

Fitur ini mengaktifkan radio untuk menunjukkan dengan suara Zona atau Saluran sekarang yang baru ditetapkan oleh pengguna, atau tekanan tombol yang bisa diprogram. Indikator audio dapat dikustomisasi menurut keperluan subscriber. Ini biasanya berguna ketika pengguna kesulitan untuk membaca informasi yang ditampilkan di layar.

1 Tekan OK untuk mengakses menu.

2 Tekan ▲ atau ▼ ke Utilitas dan tekan OK untuk memilih.

3 Tekan ▲ atau ▼ ke Pengaturan Radio dan tekan OK untuk memilih.

4 Tekan ▲ atau ▼ ke Pengumuman Suara dan tekan OK untuk memilih.

Anda juga bisa menggunakan atau untuk mengubah opsi yang dipilih.

5 Lakukan salah satu langkah berikut:

- Tekan OK untuk mengaktifkan Pengumuman Suara. Layar menampilkan ✓ di sebelah Diaktifkan.
- Tekan OK untuk menonaktifkan Pengumuman Suara. Tanda ✓ hilang dari sebelah Diaktifkan.

5.3.26.13

Pencatat Waktu Menu

Atur jangka waktu radio Anda berada di menu sebelum otomatis beralih ke layar Awal.

1 Tekan OK untuk mengakses menu.

2 Tekan ▲ atau ▼ ke Utilitas dan tekan OK untuk memilih.

3 Tekan ▲ atau ▼ ke Pengaturan Radio dan tekan OK untuk memilih.

4 Tekan ▲ atau ▼ ke Layar dan tekan OK untuk memilih.

5 Tekan ▲ atau ▼ ke Pencatat Waktu Menu dan tekan OK untuk memilih.

6 Tekan ▲ atau ▼ ke pengaturan yang diperlukan dan tekan OK untuk memilih.

5.3.26.14

Mengaktifkan atau Menonaktifkan Klakson/Lampu

Fitur ini harus diinstal melalui konektor aksesori belakang pada radio oleh dealer.

Radio dapat memberi tahu Anda bila ada panggilan masuk menggunakan fitur klakson dan lampu. Bila fitur diaktifkan,

panggilan masuk akan membunyikan klakson dan menyalakan lampu kendaraan.

1 Lakukan salah satu langkah berikut:

- Tekan tombol **Klakson/Lampu** yang telah diprogram untuk mengaktifkan atau menonaktifkan fitur klakson dan lampu. Lompati langkah-langkah berikut ini.
- Tekan OK untuk mengakses menu.

2 Tekan ▲ atau ▼ ke `Utilitas` dan tekan OK untuk memilih.

3 Tekan ▲ atau ▼ ke `Pengaturan Radio` dan tekan OK untuk memilih.

4 Tekan ▲ atau ▼ ke `Klakson/Lampu` dan tekan OK untuk memilih.

5 Tekan OK untuk mengaktifkan/menonaktifkan Horns/Lights.

Layar menampilkan ✓ di sebelah `Diaktifkan`.

Tanda ✓ hilang dari sebelah `Diaktifkan`.

5.3.26.15

Mengatur Preferensi Operasi Kenop Ganda

Radio Anda memiliki **Kenop Volume/Saluran** fungsi ganda. Menonaktifkan pilihan fungsi ganda akan mengatur kenop tersebut untuk berfungsi hanya sebagai Kenop Volume.

1 OK untuk mengakses menu.

2 ▲ atau ▼ ke `Utilitas` dan tekan OK untuk memilih.

3 ▲ atau ▼ ke Pengaturan Radio dan tekan OK untuk memilih.

4 ▲ atau ▼ tekan OK untuk memilih ke Kenop Ganda dan .

5 Layar akan menampilkan Volume Saja dan Volume & Saluran. ▲ atau ▼ tekan OK untuk memilih ke pengaturan yang diinginkan dan .

✓ muncul di samping setelan yang dipilih.

Layar kembali ke menu sebelumnya.

5.3.26.16

Mik Digital AGC (Mic AGC-D)

Fitur ini mengontrol penguatan mikrofon radio secara otomatis sewaktu bertransmisi di sistem digital. Fitur ini menekan audio yang keras atau mendorong audio yang lemah ke nilai yang telah diatur untuk memberikan tingkat audio yang konsisten.

1 Tekan OK untuk mengakses menu.

2 Tekan ▲ atau ▼ ke Utilitas dan tekan OK untuk memilih.

3 Tekan ▲ atau ▼ ke Pengaturan Radio dan tekan OK untuk memilih.

4 Tekan ▲ atau ▼ ke Mic AGC-D dan tekan OK untuk memilih.

5 Lakukan salah satu langkah berikut:

- Tekan OK untuk mengaktifkan **Mic AGC-D** . Layar menampilkan ✓ di sebelah Diaktifkan .
- Tekan OK untuk menonaktifkan **Mic AGC-D** . Ikon ✓hilang dari sebelah Diaktifkan .

5.3.26.17

Audio Cerdas

Radio ini dapat menyesuaikan volume audio secara otomatis untuk mengatasi kebisingan di sekitar, termasuk semua sumber kebisingan stasioner dan nonstasioner. Ini adalah fitur Hanya terima dan tidak memengaruhi audio Transmisi.

1 Tekan OK untuk mengakses menu.

Kontrol Radio	Langkah
Menu	**a** Tekan OK untuk mengakses menu. **b** Tekan ▲ atau ▼ ke `Pengaturan Radio` dan tekan OK untuk memilih.
	c Tekan ▲ atau ▼ ke `Pengaturan Radio` dan tekan OK untuk memilih. **d** Tekan ▲ atau ▼ ke `Audio Cerdas` dan tekan OK untuk memilih. **PEMBERITAHUAN:** Anda juga bisa menggunakan atau untuk mengubah opsi yang dipilih. **e** Lakukan salah satu langkah berikut: • Tekan OK untuk mengaktifkan Audio Cerdas. Layar menampilkan ✓ di sebelah `Diaktifkan`.

Kontrol Radio	Langkah
	• Tekan OK untuk menonaktifkan Audio Cerdas. Tanda ✓ hilang dari sebelah Diaktifkan.

2 Tekan ▲ atau ▼ ke Utilitas dan tekan OK untuk memilih.

3 Tekan ▲ atau ▼ ke Pengaturan Radio dan tekan OK untuk memilih.

4 Tekan ▲ atau ▼ ke Audio Cerdas dan tekan OK untuk memilih.

5 Lakukan salah satu langkah berikut:

- Tekan OK untuk mengaktifkan Audio Cerdas. Layar menampilkan ✓ di sebelah Diaktifkan.
- Tekan OK untuk menonaktifkan Audio Cerdas. Tanda ✓ hilang dari sebelah Diaktifkan.

Lihat Daftar Aksesori Resmi untuk aksesori audio yang mendukung Bluetooth dengan Kontrol Volume Suara Otomatis internal untuk kinerja serupa.

5.3.26.18

Mengaktifkan atau Menonaktifkan Fitur Peredam Umpan Balik Akustik

Fitur ini membuat Anda dapat meminimalkan umpan balik akustik di panggilan yang diterima.

1 Tekan OK untuk mengakses menu.

2 Tekan ▲ atau ▼ ke Utilitas dan tekan OK untuk memilih.

3 Tekan ▲ atau ▼ ke Pengaturan Radio dan tekan OK untuk memilih.

4 Tekan ▲ atau ▼ ke Peredam AF dan tekan OK untuk memilih.

Anda juga bisa menggunakan atau untuk mengubah opsi yang dipilih.

5 Lakukan salah satu dari langkah berikut.

- Tekan OK untuk mengaktifkan Peredam Umpan balik Akustik. Layar menampilkan ✓ di sebelah Diaktifkan.
- Tekan OK untuk menonaktifkan Peredam Umpan Balik Akustik. Tanda ✓ hilang dari sebelah Diaktifkan.

5.3.26.19

Mengaktifkan atau Menonaktifkan GNSS

Global Navigation Satellite System (GNSS) adalah sistem navigasi satelit yang menentukan lokasi radio dengan tepat. GNSS meliputi Global Positioning System (GPS), Global Navigation Satellite System (GLONASS), dan BeiDou Navigation Satellite System (BDS).

PEMBERITAHUAN:
Model radio tertentu mungkin menawarkan GPS, GLONASS, dan BDS. Konstelasi GNSS dikonfigurasikan menggunakan CPS. Tanyakan kepada dealer atau administrator sistem Anda untuk mengetahui bagaimana radio Anda diprogram.

1 Lakukan salah satu langkah berikut:

- Tekan tombol **GNSS** yang terprogram untuk mengaktifkan atau menonaktifkan fitur tersebut. Lompati langkah-langkah berikut ini.
- Tekan OK untuk mengakses menu.

2 Tekan ▲ atau ▼ ke Utilitas. Tekan OK untuk memilih.

3 Tekan ▲ atau ▼ ke Pengaturan Radio. Tekan OK untuk memilih.

4 Tekan ▲ atau ▼ ke GNSS. Tekan OK untuk memilih.

5 Tekan OK untuk mengaktifkan/menonaktifkan GNSS.

Jika diaktifkan, ✔ muncul di sebelah Diaktifkan.

Jika dinonaktifkan, ✔ hilang dari sebelah Diaktifkan.

Lihat Memeriksa Informasi GNSS di halaman 368 untuk informasi rinci tentang cara mengambil informasi GNSS.

5.3.26.20

Mengakses Informasi Radio Umum

Radio Anda memuat informasi tentang hal berikut ini:

- Baterai
- Derajat Kemiringan (Akselerometer)
- Indeks Nomor Model Radio
- Codeplug CRC Over-the-Air (OTA) Papan Opsi
- Nomor Site
- Info Site
- Alias dan ID Radio
- Versi Firmware dan Codeplug
- Informasi GNSS

Tekan untuk kembali ke layar sebelumnya atau tekan lama untuk kembali ke layar Awal. Radio keluar dari layar saat ini setelah pencatat waktu nonaktif berakhir.

5.3.26.20.1

Memeriksa Indeks Nomor Model Radio

Nomor indeks mengidentifikasi perangkat keras khusus model radio Anda. Administrator sistem radio Anda dapat meminta nomor ini saat menyiapkan codeplug Papan Opsi yang baru untuk radio.

1 Tekan OK untuk mengakses menu.

2 Tekan atau ke Utilitas dan tekan OK untuk memilih.

3 Tekan atau ke Info Radio dan tekan OK untuk memilih.

4 Tekan ▲ atau ▼ ke `Indeks Model` dan tekan OK untuk memilih.

Layar akan menampilkan Indeks Nomor Model.

5.3.26.20.2

Memeriksa CRC File Codeplug OTA Papan Opsi

Ikuti instruksi di bawah ini jika administrator sistem radio Anda meminta Anda menampilkan CRC (Pemeriksaan Redundansi Siklus) File Codeplug Papan Opsi OTA (melalui udara). Opsi menu ini hanya muncul jika Papan Opsi menerima pembaruan codeplug terakhir melalui udara (OTA).

1 Tekan OK untuk mengakses menu.

2 Tekan ▲ atau ▼ ke `Utilitas` dan tekan OK untuk memilih.

3 Tekan ▲ atau ▼ ke `Info Radio` dan tekan OK untuk memilih.

4 Tekan ▲ atau ▼ ke `OB OTA CPcrc` dan tekan OK untuk memilih.

Layar akan menampilkan sejumlah huruf dan nomor. Komunikasikan informasi ini dengan administrator sistem radio Anda sebagaimana yang ditunjukkan.

5.3.26.20.3

Menampilkan ID Site (Nomor Site)

PEMBERITAHUAN:
Jika Anda saat ini tidak terdaftar di sebuah site, layar akan menampilkan `Tidak Terdaftar`.

Radio sekilas akan menampilkan ID Site saat terdaftar ke site Connect Plus. Setelah pendaftaran, radio biasanya tidak menunjukkan nomor Site. Untuk menampilkan nomor Site yang terdaftar, lakukan hal berikut:

1 Tekan OK untuk mengakses menu.

2 Tekan ▲ atau ▼ ke `Utilitas` dan tekan OK untuk memilih.

3 Tekan ▲ atau ▼ ke `Info Radio` dan tekan OK untuk memilih.

4 Tekan ▲ atau ▼ ke `Nomor Site` dan tekan OK untuk memilih.

Layar akan menampilkan ID Jaringan dan Nomor Site.

5.3.26.20.4

Memeriksa Info Site

PEMBERITAHUAN:
Jika Anda saat ini tidak terdaftar di sebuah site, layar akan menampilkan `Tidak Terdaftar`.

Fitur Info Site memberikan informasi yang dapat berguna bagi teknisi servis. Fitur berisi informasi berikut:

- Jumlah repeater Saluran Kontrol saat ini.
- RSSI: Nilai kekuatan sinyal terakhir yang diukur dari repeater Saluran Kontrol.
- Neighbor List yang dikirim oleh repeater Saluran Kontrol (lima angka dipisahkan tanda koma).

Jika Anda diminta menggunakan fitur ini, laporkan informasi yang ditampilkan persis seperti yang muncul pada layar.

1 Tekan OK untuk mengakses menu.

2 Tekan ▲ atau ▼ ke `Utilitas` dan tekan OK untuk memilih.

3 Tekan ▲ atau ▼ ke `Info Radio` dan tekan OK untuk memilih.

4 Tekan ▲ atau ▼ ke `Info Site` dan tekan OK untuk memilih.

Layar akan menampilkan Info Site.

5.3.26.20.5

Memeriksa ID Radio

Fitur ini menampilkan ID radio Anda.

Ikuti prosedur berikut untuk mengakses fitur ini melalui layar radio.

1 Tekan OK untuk mengakses menu.

2 Tekan ▲ atau ▼ ke `Utilitas` dan tekan OK untuk memilih.

3 Tekan ▲ atau ▼ ke `Info Radio` dan tekan OK untuk memilih.

4 Tekan ▲ atau ▼ ke `ID Saya` dan tekan OK untuk memilih.

Layar akan menunjukkan ID radio.

5.3.26.20.6

Memeriksa Versi Firmware dan Versi Codeplug

Menampilkan versi firmware di radio.

1 Tekan OK untuk mengakses menu.

2 Tekan ▲ atau ▼ ke `Utilitas` dan tekan OK untuk memilih.

3 Tekan ▲ atau ▼ ke `Info Radio` dan tekan OK untuk memilih.

4 Tekan ▲ atau ▼ ke `Versi` dan tekan OK untuk memilih.

Layar akan menampilkan daftar informasi berikut:

- Versi Firmware (Radio)
- Versi Codeplug (Radio)
- Versi Firmware Papan Opsi
- Versi Frekuensi Papan Opsi

- Versi Perangkat Keras Papan Opsi
- Versi Codeplug Papan Opsi

5.3.26.20.7

Memeriksa Pembaruan

Connect Plus memberikan kemampuan untuk memperbarui file tertentu (Codeplug Papan Opsi, File Frekuensi Jaringan, dan File Firmware Papan Opsi) melalui udara (OTA).

PEMBERITAHUAN:
Tanyakan dealer atau administrator jaringan Anda untuk menentukan apakah fitur ini telah diaktifkan pada radio Anda.

Setiap radio Connect Plus dengan layar dapat menampilkan CRC Codeplug OTA Papan Opsi, versi File Frekuensi, atau versi file firmware Papan Opsi saat ini menggunakan opsi menu. Selain itu, radio dengan layar yang telah memiliki fitur transfer file melalui udara yang diaktifkan dapat menampilkan versi "file tertunda". "File tertunda" adalah File Frekuensi atau file firmware Papan Opsi yang diketahui radio Connect Plus melalui pengolahan pesan sistem, tetapi radio tersebut belum mengumpulkan semua paket file. Jika radio Connect Plus dengan layar memiliki file tertunda, menu akan memberikan opsi untuk:

- Melihat nomor versi dari file tertunda.
- Melihat persentase paket yang sejauh ini sudah dikumpulkan.
- Meminta radio Connect Plus untuk terus mengumpulkan paket file.

Jika transfer file OTA Connect Plus diaktifkan pada radio, akan ada waktu saat radio secara otomatis bergabung dengan transfer file tanpa memberitahu pengguna radio terlebih dahulu. Saat radio sedang mengumpulkan paket file, LED berkedip merah dengan cepat dan radio menampilkan ikon Data Volume Tinggi pada bar status Layar Awal.

PEMBERITAHUAN:
Radio Connect Plus tidak dapat mengumpulkan paket file dan menerima panggilan secara bersamaan. Jika Anda ingin membatalkan transfer file, tekan dan lepaskan tombol **PTT**. Hal ini menyebabkan radio meminta panggilan pada Nama Kontak terpilih, dan akan membatalkan transfer file untuk radio tersebut hingga proses berlanjut di lain waktu.

Ada sejumlah hal yang dapat membuat proses transfer file dimulai kembali. Contoh pertama berlaku bagi semua jenis file OTA. Contoh lainnya hanya berlaku bagi File Frekuensi Jaringan dan File Firmware Papan Opsi:

- Administrator sistem radio memulai kembali transfer file OTA.
- Pencatat waktu Papan Opsi yang telah ditentukan habis, sehingga Papan Opsi melanjutkan proses pengumpulan paket secara otomatis.
- Pencatat waktu belum habis, tetapi pengguna radio meminta transfer file diteruskan melalui opsi menu.

Setelah radio Connect Plus selesai mengunduh semua paket file, radio tersebut harus memutakhirkan ke file yang baru diperoleh. Untuk File Frekuensi Jaringan, proses ini berlangsung secara otomatis dan radio tidak perlu diatur ulang. Untuk File Codeplug Papan Opsi, proses ini berlangsung secara otomatis yang akan menimbulkan gangguan singkat terhadap layanan karena Papan Opsi memuat informasi codeplug yang baru dan mendapatkan kembali site jaringan. Seberapa cepat radio memutakhirkan ke file firmware Papan Opsi yang baru bergantung pada bagaimana radio tersebut dikonfigurasi oleh dealer atau administrator sistem. Radio akan segera melakukan pemutakhiran setelah mengumpulkan semua paket file, atau akan menunggu hingga saat berikutnya pengguna mengaktifkan radio.

PEMBERITAHUAN:
Tanyakan kepada dealer atau administrator sistem Anda untuk mengetahui bagaimana radio Anda diprogram.

Proses pemutakhiran ke file firmware Papan Opsi yang baru membutuhkan waktu beberapa detik, dan Papan Opsi Connect Plus harus mengatur ulang radio. Setelah pemutakhiran dimulai, pengguna radio tidak akan dapat melakukan atau menerima panggilan hingga proses selesai. Selama proses, layar radio memperingatkan pengguna agar tidak mematikan radio.

5.3.26.20.7.1
File Firmware

Bagian berikut memberikan informasi tentang firmware radio.

5.3.26.20.7.1.1
Pembaruan Firmware

PEMBERITAHUAN:
Jika file firmware Papan Opsi tidak Terbaru (dan jika sebagian radio telah mengumpulkan versi file firmware Papan Opsi yang lebih baru), radio menampilkan daftar dengan opsi tambahan; `Versi`, `%Diterima`, dan `Unduh`.

1. Tekan OK untuk mengakses menu.
2. Tekan ▲ atau ▼ ke `Utilitas` dan tekan OK untuk memilih.
3. Tekan ▲ atau ▼ ke `Info Radio` dan tekan OK untuk memilih.
4. Tekan ▲ atau ▼ ke `Pembaruan` dan tekan OK untuk memilih.
5. Tekan ▲ atau ▼ ke `Firmware` dan tekan OK untuk memilih.

   Layar akan menampilkan `Firmware Diperbarui`.

5.3.26.20.7.2
Firmware Tertunda – Versi

1. Tekan OK untuk mengakses menu.
2. Tekan ▲ atau ▼ ke `Utilitas` dan tekan OK untuk memilih.
3. Tekan ▲ atau ▼ ke `Info Radio` dan tekan OK untuk memilih.
4. Tekan ▲ atau ▼ ke `Pembaruan` dan tekan OK untuk memilih.

5 Tekan ▲ atau ▼ ke `Firmware` dan tekan OK untuk memilih.

6 Tekan ▲ atau ▼ ke `Versi` dan tekan OK untuk memilih.

Jika ada file firmware Papan Opsi yang tertunda, layar akan menampilkan nomor versi firmware yang tertunda tersebut.

Jika ada file firmware Papan Opsi tertunda, layar akan menampilkan `Firmware Diperbarui.`

5.3.26.20.7.3

Firmware Tertunda – % Diterima

1 Tekan OK untuk mengakses menu.

2 Tekan ▲ atau ▼ ke `Utilitas` dan tekan OK untuk memilih.

3 Tekan ▲ atau ▼ ke `Info Radio` dan tekan OK untuk memilih.

4 Tekan ▲ atau ▼ ke `Pembaruan` dan tekan OK untuk memilih.

5 Tekan ▲ atau ▼ ke `Firmware` dan tekan OK untuk memilih.

6 Tekan ▲ atau ▼ ke `%Diterima` dan tekan OK untuk memilih.

Layar akan menampilkan persentase paket file firmware yang dikumpulkan sejauh ini.

PEMBERITAHUAN:
Setelah 100%, radio perlu dinonaktifkan kemudian diaktifkan kembali untuk memulai pemutakhiran firmware.

5.3.26.20.7.4

Firmware Tertunda – Unduh

Jika radio Connect Plus sebelumnya meninggalkan Transfer File Firmware Papan Opsi OTA dengan file parsial, unit akan bergabung kembali dengan transfer file secara otomatis (jika masih berlangsung) saat pencatat waktu internal habis. Jika Anda ingin unit bergabung kembali dengan transfer File Firmware Papan Opsi yang sedang berlangsung sebelum pencatat waktu internal habis, gunakan opsi Unduh seperti dijelaskan di bawah.

1 Tekan OK untuk mengakses menu.

2 Tekan ▲ atau ▼ ke `Utilitas` dan tekan OK untuk memilih.

3 Tekan ▲ atau ▼ ke `Info Radio` dan tekan OK untuk memilih.

4 Tekan ▲ atau ▼ ke `Pembaruan` dan tekan OK untuk memilih.

5 Tekan ▲ atau ▼ ke `Firmware` dan tekan OK untuk memilih.

6 Tekan ▲ atau ▼ ke `Unduh` dan tekan OK untuk memilih.

Layar menampilkan hal berikut:

Unduhan Tersedia	`Mulai Mengunduh`
Tidak ada Unduhan Tersedia	`Unduhan tidak tersedia`

7 Lakukan salah satu langkah berikut:

- Pilih `Ya` dan tekan OK untuk memulai pengunduhan.
- Pilih `Tidak` dan tekan OK untuk kembali ke menu sebelumnya.

5.3.26.20.7.5

File Frekuensi

Bagian berikut memberikan informasi tentang file frekuensi radio.

5.3.26.20.7.5.1

Pembaruan File Frekuensi

PEMBERITAHUAN:
Jika File Frekuensi tidak Terbaru (dan jika radio sebagian telah mengumpulkan versi file frekuensi yang lebih baru), radio menampilkan daftar dengan opsi tambahan; `Versi`, `%Diterima`, dan `Unduh`.

1. Tekan OK untuk mengakses menu.
2. Tekan ▲ atau ▼ ke `Utilitas` dan tekan OK untuk memilih.
3. Tekan ▲ atau ▼ ke `Info Radio` dan tekan OK untuk memilih.
4. Tekan ▲ atau ▼ ke `Frekuensi` dan tekan OK untuk memilih.

   Layar akan menampilkan `Frek. File Diperbarui.`

5.3.26.20.7.5.2

Penundaan File Frekuensi - Versi

1. Tekan OK untuk mengakses menu.
2. Tekan ▲ atau ▼ ke `Utilitas` dan tekan OK untuk memilih.
3. Tekan ▲ atau ▼ ke `Info Radio` dan tekan OK untuk memilih.
4. Tekan ▲ atau ▼ ke `Pembaruan` dan tekan OK untuk memilih.

5 Tekan ▲ atau ▼ ke Frekuensi dan tekan OK untuk memilih.

6 Tekan ▲ atau ▼ ke Versi dan tekan OK untuk memilih.

Jika ada File Frekuensi yang tertunda, layar menampilkan nomor versi File Frekuensi yang tertunda.

5.3.26.20.7.5.3

Penundaan File Frekuensi - % Diterima

1 Tekan OK untuk mengakses menu.

2 Tekan ▲ atau ▼ ke Utilitas dan tekan OK untuk memilih.

3 Tekan ▲ atau ▼ ke Info Radio dan tekan OK untuk memilih.

4 Tekan ▲ atau ▼ ke Pembaruan dan tekan OK untuk memilih.

5 Tekan ▲ atau ▼ ke %Diterima dan tekan OK untuk memilih.

Layar akan menampilkan persentase paket file frekuensi yang dikumpulkan sejauh ini.

5.3.26.20.7.5.4

Penundaan File Frekuensi - Unduh

Jika radio Connect Plus sebelumnya meninggalkan Transfer File Frekuensi Jaringan OTA dengan file parsial, unit akan bergabung kembali dengan transfer file secara otomatis (jika masih berlangsung) saat pencatat waktu internal habis. Jika Anda ingin unit bergabung kembali dengan transfer File Frekuensi Jaringan yang sedang berlangsung sebelum pencatat waktu internal habis, gunakan opsi Unduh seperti dijelaskan di bawah.

1 Tekan OK untuk mengakses menu.

2 Tekan ▲ atau ▼ ke `Utilitas` dan tekan OK untuk memilih.

3 Tekan ▲ atau ▼ ke `Info Radio` dan tekan OK untuk memilih.

4 Tekan ▲ atau ▼ ke `Pembaruan` dan tekan OK untuk memilih.

5 Tekan ▲ atau ▼ ke `Frekuensi` dan tekan OK untuk memilih.

6 Tekan ▲ atau ▼ ke `Unduh` dan tekan OK untuk memilih.

Unduhan Saat Ini Tidak Tersedia	`Unduhan tidak tersedia`

Unduhan Saat Ini Tersedia	`Mulai Mengunduh`

7 Lakukan salah satu langkah berikut:
- Pilih `Ya` dan tekan untuk memulai pengunduhan.
- Pilih `Tidak` dan tekan untuk kembali ke menu sebelumnya.

5.3.26.20.7.6

Memeriksa Informasi GNSS

Menampilkan informasi GNSS di radio, misalnya nilai:

- Garis Lintang
- Garis Bujur
- Ketinggian
- Arah
- Kecepatan
- HDOP (Penipisan Ketepatan secara Horizontal)
- Satelit

- Versi

1. Tekan OK untuk mengakses menu.
2. Tekan ▲ atau ▼ ke `Utilitas` dan tekan OK untuk memilih.
3. Tekan ▲ atau ▼ ke `Info Radio` dan tekan OK untuk memilih.
4. Tekan ▲ atau ▼ ke `Info GNSS` dan tekan OK untuk memilih.
5. Tekan ▲ atau ▼ ke item yang diperlukan dan tekan OK untuk memilih.

   Informasi GNSS yang diminta akan ditampilkan di layar.

Lihat Mengaktifkan atau Menonaktifkan GNSS di halaman 356 untuk detail tentang GNSS.

5.3.26.21

Melihat Detail Sertifikat Wi-Fi Enterprise

Anda bisa melihat detail Sertifikat Wi-Fi Enterprise terpilih.

1. Tekan OK untuk mengakses menu.
2. Tekan ▲ atau ▼ ke `Utilitas`.Tekan OK untuk memilih.
3. Tekan ▲ atau ▼ ke `Menu Sertifikat`.

   Tekan OK untuk memilih.

   ✓ tampak di samping sertifikat yang siap.
4. Tekan ▲ atau ▼ ke sertifikat yang diinginkan.

   Tekan OK untuk memilih.

Radio Anda menampilkan detail lengkap dari sertifikat.

PEMBERITAHUAN:
Untuk sertifikat yang belum siap, layar hanya menampilkan Status.

Sistem Lainnya

Fitur yang tersedia untuk pengguna radio pada sistem ini tersedia dalam bab ini.

6.1

Tombol Push-To-Talk

Tombol Push-to-Talk **PTT** memiliki dua fungsi dasar:

- Saat panggilan sedang berlangsung, tombol **PTT** memungkinkan radio untuk mengirim transmisi ke radio lain dalam panggilan. Mikrofon diaktifkan saat tombol **PTT** ditekan.
- Saat tidak sedang dalam panggilan, tombol **PTT** digunakan untuk melakukan panggilan baru.

Tekan lama tombol **PTT** untuk berbicara. Lepaskan tombol **PTT** untuk mendengarkan.

Jika Nada Izin Bicara atau Sidetone PTT diaktifkan, tunggu hingga nada peringatan pendek berakhir sebelum berbicara.

Jika fitur Indikasi Saluran Bebas di radio aktif (diprogram oleh penyalur), Anda akan mendengar nada peringatan singkat diputar pada saat radio target (radio yang menerima panggilan) melepaskan tombol **PTT**, menunjukkan bahwa saluran bebas untuk menerima tanggapan Anda.

Anda mendengar Nada Larangan Bicara berkelanjutan jika panggilan Anda diinterupsi. Anda harus melepaskan tombol **PTT** jika mendengar Nada Larangan Bicara kontinu.

6.2

Tombol yang Dapat Diprogram

Tergantung pada durasi penekanan tombol, dealer dapat memprogram tombol yang dapat diprogram sebagai pintasan fungsi radio.

Tekan sebentar
Menekan dan melepas dengan cepat.

Tekan lama
Menekan dan menahan selama durasi terprogram.

PEMBERITAHUAN:
Lihat Pengoperasian Darurat di halaman 458 untuk informasi selengkapnya tentang durasi terprogram untuk tombol **Darurat**.

6.2.1

Fungsi Radio yang Dapat Ditetapkan

Fungsi radio berikut ini dapat dialokasikan pada tombol yang dapat diprogram.

Ambien Audio
Memungkinkan pengguna memilih lingkungan tempat pengoperasian radio.

Profil Audio
Memungkinkan pengguna memilih profil audio yang diinginkan.

Sakelar Audio Bluetooth®
Mengalihkan perutean audio antara speaker radio internal dan aksesori berkemampuan Bluetooth eksternal.

Hubungkan Bluetooth
Menginisiasi operasi pencarian dan sambungan Bluetooth.

Putus Sambungan Bluetooth
Menghentikan semua sambungan Bluetooth yang ada antara radio dan perangkat berkemampuan Bluetooth.

Bluetooth Dapat Ditemukan
Memungkinkan radio memasuki Mode Bluetooth Dapat Ditemukan.

Peringatan Panggilan
Menyediakan akses langsung ke daftar kontak untuk memilih kontak yang akan dikirimi Peringatan Panggilan.

Penerusan Panggilan
Mengaktifkan atau menonaktifkan Penerusan Panggilan.

Log Panggilan
Memilih daftar log panggilan.

Pengumuman Saluran
Memutar pesan suara pengumuman zona dan saluran untuk saluran saat ini.

Kontak
Memberikan akses langsung ke daftar Kontak.

Darurat
Menginisiasi atau membatalkan status darurat, tergantung pemrogramannya.

Alamat Publik (Public Address/PA) Eksternal
Mengalihkan perutean audio antara amplifier pengeras suara PA yang terhubung dan sistem PA internal radio.

Lokasi Dalam Ruangan
Mengaktifkan atau menonaktifkan Lokasi Dalam Ruangan.

Audio Cerdas
Mengaktifkan atau menonaktifkan audio cerdas.

Panggilan Manual
Memulai Panggilan Pribadi dengan memasukkan ID subscriber apa pun.

Jelajah Site Manual[7]
Memulai pencarian site secara manual.

AGC Mik
Mengaktifkan atau menonaktifkan automatic gain control (AGC) mikrofon internal.

Monitor
Memonitor aktivitas pada saluran terpilih.

Notifikasi
Memberikan akses langsung ke daftar Notifikasi.

Penghapusan Saluran Gangguan[7]
Menghapus sementara saluran yang tidak dikehendaki, kecuali untuk Saluran Terpilih, dari daftar pindai. Saluran Terpilih merujuk ke zona terpilih atau kombinasi saluran pengguna yang menjadi awal tempat pemindaian.

Akses Satu Sentuhan
Langsung memulai Panggilan Pribadi, Telepon, atau Grup, Pemberitahuan Panggilan, pesan Teks Cepat, atau Balik Depan yang telah ditentukan.

Fitur Papan Opsi
Mengaktifkan atau menonaktifkan fitur papan opsi untuk saluran berkemampuan papan opsi.

Monitor Permanen[7]
Memonitor semua lalu lintas radio pada saluran terpilih sampai fungsi dinonaktifkan.

Telepon
Memberikan akses langsung ke daftar Kontak Telepon.

Privasi
Mengaktifkan atau menonaktifkan privasi.

Alamat Publik (Public Address/PA)
Mengaktifkan atau menonaktifkan sistem PA internal radio.

Alias dan ID Radio
Memberikan alias dan ID radio.

Pemeriksaan Radio
Menentukan apakah radio aktif dalam sistem.

[7] Tidak berlaku dalam Capacity Plus.

Penonaktifan Radio
Memungkinkan radio target dinonaktifkan dari jauh.

Pengaktifan Radio
Memungkinkan radio target diaktifkan dari jauh.

Monitor Jarak Jauh
Mengaktifkan mikrofon radio target tanpa indikator apa pun.

Repeater/Talkaround[7]
Berganti antara menggunakan repeater dan berkomunikasi secara langsung dengan radio lainnya.

Atur Ulang Saluran Home
Menyiapkan saluran home baru.

Senyapkan Pengingat Saluran Home
Mematikan suara Pengingat Saluran Home.

Pemindaian[8]
Mengaktifkan atau menonaktifkan pemindaian.

Info Site
Menampilkan nama site saat ini dan ID Capacity Plus-Multi-Site.

Memutar pesan suara pengumuman site untuk site saat ini ketika Pengumuman Suara diaktifkan.

Kunci Site[7]
Ketika diaktifkan, radio akan mencari site saat ini saja. Ketika dinonaktifkan, radio akan mencari site lain di samping site saat ini.

Kontrol Telemetri
Mengontrol Pin Output pada radio setempat atau yang berjarak jauh.

Pesan Teks
Memilih menu pesan teks.

Dekey Jauh Interupsi Transmisi
Menghentikan panggilan dapat disela yang sedang berlangsung untuk membebaskan saluran.

Peningkatan Trill
Mengaktifkan atau menonaktifkan peningkatan trill.

Pengumuman Suara Aktif/Nonaktif
Mengaktifkan atau menonaktifkan pengumuman suara.

Transmisi Pengoperasian Suara (VOX)
Mengaktifkan atau menonaktifkan VOX.

Wi-Fi
Mengaktifkan atau menonaktifkan Wi-Fi.

---

[8] Tidak berlaku dalam Capacity Plus–Single-Site.

Pemilihan Zona
Memungkinkan pemilihan dari daftar zona.

6.2.2

Fungsi Utilitas atau Pengaturan yang Dapat Ditetapkan

Fungsi utilitas atau pengaturan radio berikut ini dapat ditetapkan ke tombol yang dapat diprogram.

Nada/Peringatan
Mengaktifkan atau menonaktifkan semua nada dan peringatan.

Lampu Latar
Menghidupkan atau mematikan lampu latar tampilan.

Saluran Naik/Turun
Tergantung pemrogramannya, mengubah saluran ke saluran sebelumnya atau berikutnya.

Mode Layar
Mengaktifkan atau menonaktifkan mode tampilan siang/malam hari.

Tingkat Daya
Mengganti antara tingkat kekuatan transmisi tinggi dan rendah.

6.2.3

Mengakses Fungsi Terprogram

Ikuti prosedur untuk mengakses fungsi-fungsi terprogram pada radio Anda.

1 Lakukan salah satu langkah berikut:
   - Tekan tombol yang diprogram. Lanjutkan ke langkah 3.
   - Tekan OK untuk mengakses menu.

2 Tekan ▲ atau ▼ ke fungsi menu, dan tekan OK untuk memilih fungsi atau masuk sub-menu.

3 Lakukan salah satu langkah berikut:
   - Tekan untuk kembali ke layar sebelumnya.
   - Tekan lama untuk kembali ke layar Awal.

   Radio keluar dari menu secara otomatis setelah tidak aktif selama waktu tertentu dan kembali ke layar Awal.

Tombol Navigasi Menu juga tersedia pada mikrofon keypad. Lihat Tombol Mikrofon Keypad di halaman 43 .

6.3

Indikator Status

Bab ini menjelaskan indikator status dan nada audio yang digunakan pada radio.

6.3.1

Ikon

Liquid Crystal Display (LCD) radio Anda menampilkan status radio, entri teks, dan entri menu.

Tabel 10 :Ikon Layar

Ikon berikut ini muncul di bilah status pada bagian atas layar radio. Ikon disusun dari kiri berdasarkan kemunculan atau penggunaan, dan bersifat spesifik saluran.

	BeiDou Only Tersedia[9] Fitur BeiDou Only diaktifkan. Ikon akan terus menyala bila posisi tetap telah tersedia.
	Bluetooth Tersambung Fitur Bluetooth diaktifkan. Ikon akan menyala bila perangkat Bluetooth jauh tersambung.
	Bluetooth Tidak Tersambung Fitur Bluetooth diaktifkan, tetapi tidak ada perangkat Bluetooth jauh yang tersambung.
	Log Panggilan Log panggilan radio.
	Kontak Kontak radio tersedia.
	Darurat Radio dalam mode Darurat.

[9] Hanya berlaku untuk XiR M8660i/XiR M8668i/CM7668i.

	Daftar Terima Fleksibel Daftar terima fleksibel diaktifkan.
	GNSS Tersedia Fitur GNSS diaktifkan. Ikon akan terus menyala bila posisi tetap telah tersedia.
	GNSS Tidak Tersedia Fitur GNSS telah diaktifkan, tetapi tidak menerima data dari satelit.
	Data Volume Tinggi Radio menerima data volume tinggi dan saluran sedang sibuk.
	Lokasi Dalam Ruangan Tersedia[10] Status lokasi dalam ruangan aktif dan tersedia.
	Lokasi Dalam Ruangan Tidak Tersedia[10] Status lokasi dalam ruangan aktif tetapi tidak tersedia karena Bluetooth dinonaktifkan atau Beacons Scan dihentikan oleh Bluetooth.
	Pesan Pesan masuk.
	Monitor Saluran terpilih sedang dimonitor.
	Mode Bisu Mode Bisu aktif dan speaker dibisukan.
	Pemberitahuan Daftar Notifikasi memiliki satu atau beberapa aktivitas yang terlewat.
	Papan Opsi Papan Opsi diaktifkan. (Hanya untuk model yang dilengkapi papan opsi.)
	Papan Opsi Tidak Berfungsi Papan Opsi dinonaktifkan.

[10] Hanya berlaku untuk model dengan perangkat lunak dan perangkat keras terbaru.

	Pencatat Waktu Penundaan Pemrograman Melalui Udara Menunjukkan waktu yang tersisa sebelum radio menyala ulang otomatis.
	Indikator Kekuatan Sinyal yang Diterima (Received Signal Strength Indicator/RSSI) Jumlah bar yang ditampilkan menunjukkan kekuatan sinyal radio. Empat bar menunjukkan sinyal terkuat. Ikon ini hanya ditampilkan saat menerima.
	Larangan Tanggapan Larangan Tanggapan aktif.
	Hanya Dering Mode dering diaktifkan.
	Pindai[11] Fitur Pindai diaktifkan.
	Prioritas Pindai 1[11] Radio mendeteksi aktivitas pada saluran/kelompok yang ditetapkan sebagai Prioritas 1.
	Prioritas Pindai 2[11] Radio mendeteksi aktivitas pada saluran/kelompok yang ditetapkan sebagai Prioritas 2.
	Aman Fitur Privasi diaktifkan.
	Masuk Radio masuk ke server jauh.
	Keluar Radio keluar dari server jauh.
	Dering Tanpa Bunyi Mode dering tanpa bunyi diaktifkan.
	Jelajah Site[12] Fitur jelajah site diaktifkan.

[11] Tidak berlaku dalam Capacity Plus.
[12] Tidak berlaku dalam Capacity Plus–Single-Site.

	[11]Talkaround Dengan tidak adanya repeater, radio dikonfigurasi menjadi komunikasi langsung radio ke radio.
	Nada Nonaktif Nada dinonaktifkan.
	Tidak Aman Fitur Privasi dinonaktifkan.
	Vote Scan Fitur vote scan diaktifkan.
	Wi-Fi Sangat Baik[13] Sinyal Wi-Fi sangat baik.
	Wi-Fi Baik[13] Sinyal Wi-Fi baik.
	Wi-Fi Cukup[13] Sinyal Wi-Fi cukup.
	Wi-Fi Jelek[13] Sinyal Wi-Fi jelek.
	Wi-Fi Tidak Tersedia[13] Sinyal Wi-Fi tidak tersedia.

Tabel 11 :Ikon Menu Lanjutan

Ikon berikut ini muncul di samping item menu yang menawarkan pilihan di antara dua opsi atau sebagai indikasi bahwa ada sub-menu yang menawarkan dua opsi.

	Kotak Centang (Dicentang) Menunjukkan bahwa opsi dipilih.
	Kotak Centang (Kosong) Menunjukkan bahwa opsi tidak dipilih.

[13] Hanya berlaku untuk XiR M8668i/CM7668i.

■	**Kotak Hitam Penuh** Menunjukkan bahwa opsi dipilih untuk item menu dengan submenu.

Tabel 12 :Ikon Perangkat Bluetooth

Ikon berikut juga ditampilkan di sebelah item dalam daftar perangkat berkemampuan Bluetooth yang tersedia untuk menunjukkan jenis perangkat.

	Perangkat Audio Bluetooth Perangkat audio berkemampuan Bluetooth, misalnya headset.
	Perangkat Data Bluetooth Perangkat data berkemampuan Bluetooth, misalnya scanner.
	Perangkat PTT Bluetooth Perangkat PTT berkemampuan Bluetooth, misalnya POD (PTT-Only Device).
	Perangkat Sensor Bluetooth[13] Perangkat sensor yang diaktifkan Bluetooth, seperti sensor gas.

Tabel 13 :Ikon Panggilan

Ikon berikut ini muncul di layar selama panggilan. Ikon ini juga ditampilkan dalam daftar Kontak untuk menunjukkan jenis alias atau ID.

	Panggilan PC Bluetooth Menunjukkan Panggilan PC Bluetooth sedang berlangsung. Dalam daftar Kontak, ini ditunjukkan sebagai alias (nama) atau ID (nomor) Panggilan PC Bluetooth.
	Panggilan Pengiriman Jenis kontak Panggilan Pengiriman digunakan untuk mengirim pesan teks ke PC pengirim melalui Server Pesan Teks pihak ketiga.
	Panggilan Grup/Semua Panggilan Menunjukkan Panggilan Grup atau Semua Panggilan sedang berlangsung. Dalam daftar Kontak, ini ditunjukkan sebagai alias (nama) atau ID (nomor) grup.

	Panggilan Pribadi Menunjukkan Panggilan Pribadi sedang berlangsung. Di Daftar Kontak, ini menunjukkan alias (nama) atau ID (nomor) subscriber.
	Panggilan Telepon sebagai Panggilan Grup/Semua Panggilan Menunjukkan Panggilan Telepon sebagai Panggilan Grup atau Semua Panggilan sedang berlangsung. Dalam daftar Kontak, ini ditunjukkan sebagai alias (nama) atau ID (nomor) grup.
	Panggilan Telepon sebagai Panggilan Pribadi Menunjukkan Panggilan Telepon sebagai Panggilan Pribadi sedang berlangsung. Dalam daftar Kontak, ini ditunjukkan sebagai alias (nama) atau ID (nomor) telepon.

Tabel 14 :Ikon Tiket Tugas

Ikon berikut muncul sebentar pada layar dalam folder Tiket Tugas.

	Semua Tugas Menampilkan semua tugas tercantum.
	Tugas Baru Menampilkan tugas baru.
	Sedang Berlangsung Tugas dikirimkan. Hal ini dilihat sebelum indikasi untuk Mengirimkan Tiket Tugas Gagal atau Berhasil Terkirim.
	Gagal Terkirim Tugas tidak dapat dikirim.
	Berhasil Terkirim Tugas berhasil dikirim.
	Prioritas 1 Menunjukkan Tingkat Prioritas 1 untuk tugas.

	Prioritas 2 Menunjukkan Tingkat Prioritas 2 untuk tugas.
	Prioritas 3 Menunjukkan Tingkat Prioritas 3 untuk tugas.

Tabel 15 :Ikon Pemberitahuan Mini

Ikon berikut ini ditampilkan sekilas di layar radio setelah tindakan untuk menjalankan sebuah tugas dilakukan.

	Transmisi Gagal (Negatif) Tindakan gagal dilakukan.
	Transmisi Berhasil (Positif) Tindakan berhasil dilakukan.
	Transmisi Sedang Berlangsung (Transisional) Mentransmisikan. Ikon terlihat sebelum indikasi Transmisi Berhasil atau Transmisi Gagal.

Tabel 16 :Ikon Item Terkirim

Ikon berikut muncul di sudut kanan atas layar dalam folder Item Terkirim.

atau	**Sedang Berlangsung** Pesan teks ke alias atau ID subscriber sedang menunggu transmisi, diikuti dengan menunggu respons. Pesan teks ke alias atau ID grup sedang menunggu transmisi.
atau	**Pesan Terpisah atau Grup Telah Dibaca** Pesan teks telah dibaca.
atau	**Pesan Terpisah atau Grup Belum Dibaca** Pesan teks belum dibaca.

atau	**Gagal Terkirim** Pesan teks tidak bisa terkirim.
atau	**Berhasil Terkirim** Pesan teks telah berhasil dikirim.

6.3.2

Indikator LED

Indikator LED menampilkan status operasional radio.

Merah Berkedip

Radio gagal melakukan uji mandiri saat dihidupkan.

Radio menerima transmisi darurat.

Radio melakukan transmisi dalam kondisi baterai lemah.

Radio keluar dari jangkauan jika Sistem Transponder Auto-Range dikonfigurasikan.

Mode Bisu aktif.

Hijau Tidak Berkedip

Radio dalam proses dihidupkan.

Radio melakukan transmisi.

Radio sedang mengirim Peringatan Panggilan atau transmisi darurat.

Hijau Berkedip

Radio menerima panggilan atau data.

Radio mengambil transmisi Pemrograman Melalui Udara.

Radio mendeteksi aktivitas melalui udara.

PEMBERITAHUAN:
Aktivitas ini bisa memengaruhi saluran terprogram pada radio karena sifat dari protokol digital.

Tidak ada indikasi LED ketika radio mendeteksi aktivitas melalui udara dalam Capacity Plus.

Hijau Berkedip Ganda

Radio menerima panggilan atau data dengan privasi diaktifkan.

Kuning Tidak Berkedip

Radio sedang memantau saluran konvensional.

Radio dalam Mode Bluetooth Dapat Ditemukan.

Kuning Berkedip

Radio memindai aktivitas.

Radio belum merespons Peringatan Panggilan.

Daftar Terima Fleksibel pada radio diaktifkan.

Semua saluran Capacity Plus-Multi-Site sedang sibuk.

Kuning Berkedip Ganda

Jelajah Otomatis pada radio diaktifkan.

Radio secara aktif mencari site baru.

Radio belum merespons Peringatan Panggilan Grup.

Radio terkunci.

Radio tidak tersambung ke repeater ketika dalam Capacity Plus.

Semua saluran Capacity Plus sedang sibuk.

6.3.3
Nada

Berikut ini adalah nada yang keluar melalui speaker radio.

Nada Tinggi

Nada Rendah

6.3.3.1
Nada Indikator

Nada indikator memberi petunjuk suara tentang status setelah suatu tindakan untuk menjalankan tugas dilakukan.

Nada Indikator Positif

Nada Indikator Negatif

6.3.3.2
Nada Audio

Nada audio memberi Anda indikasi status radio yang bisa didengar atau respons radio terhadap data yang diterima.

Nada Terus Menerus

Nada monoton. Berbunyi secara terus-menerus sampai dihentikan.

Nada Berkala

Berbunyi secara berkala bergantung pada durasi yang diatur oleh radio. Nada memulai, berhenti, dan mengulang sendiri.

Nada Berulang

Nada tunggal yang berulang dengan sendirinya sampai dihentikan oleh pengguna.

Nada Sesaat

Berbunyi sekali dalam durasi singkat yang diatur oleh radio.

6.4

Mode Analog Konvensional dan Digital

Setiap saluran pada radio Anda bisa dikonfigurasikan sebagai saluran analog konvensional atau saluran digital konvensional.

1 : Kenop Pemilih Saluran

Gunakan **Pemilih Saluran** untuk beralih di antara saluran analog atau digital.

Fitur tertentu tidak tersedia jika beralih dari mode digital ke analog. Ikon untuk fitur digital menunjukkan perubahan ini dengan tampilan “abu-abu”. Fitur yang dinonaktifkan akan disembunyikan di dalam menu.

Radio juga dilengkapi fitur yang tersedia dalam mode analog dan digital. Meski demikian, perbedaan-perbedaan kecil dalam cara kerja masing-masing fitur **tidak** memengaruhi kinerja radio Anda.

PEMBERITAHUAN:
Radio juga beralih antara mode digital dan mode analog selama pemindaian mode ganda. Lihat Pemindaian di halaman 436 untuk informasi selengkapnya.

6.5

Informasi tentang Ikon

Dalam publikasi ini, ikon yang dijelaskan digunakan untuk menunjukkan fitur yang didukung baik dalam mode analog konvensional maupun digital konvensional, atau yang tersedia dengan mikrofon berkemampuan keypad.

Menunjukkan fitur **Hanya Mode Analog**.

Menunjukkan fitur **Hanya Mode Digital** konvensional.

Untuk fitur yang tersedia dalam **kedua** mode analog dan digital konvensional, kedua ikon **tidak** ditampilkan.

6.6

IP Site Connect

Fitur ini digunakan radio untuk memperluas komunikasi konvensional melampaui jangkauan satu site dengan menyambung ke site lain yang tersedia menggunakan jaringan Internet Protocol (IP). Hanya tersedia untuk mode multisite konvensional.

Bila radio keluar dari jangkauan satu site dan masuk ke jangkauan site lainnya, maka radio akan tersambung ke repeater site baru untuk mengirim atau menerima panggilan atau transmisi data. Ini dilakukan secara otomatis atau manual, tergantung pada pengaturan Anda.

Dalam pencarian site otomatis, radio akan menelusuri semua site yang tersedia bila sinyal dari site aktif lemah atau bila radio tidak dapat mendeteksi sinyal apa pun dari site aktif. Selanjutnya, radio akan terkunci ke repeater dengan nilai Indikator Kekuatan Sinyal yang Diterima (RSSI) terkuat.

Pada pencarian site secara manual, radio mencari site berikutnya dalam daftar jelajah yang saat ini berada dalam jangkauan tetapi mungkin tidak memiliki sinyal terkuat, lalu terkunci di repeater tersebut.

PEMBERITAHUAN:
Tiap saluran hanya dapat mengaktifkan Pindai atau Jelajah, bukan keduanya secara bersamaan.

Saluran yang mengaktifkan fitur ini dapat ditambahkan ke daftar jelajah tertentu. Radio mencari saluran dalam daftar jelajah selama pengoperasian jelajah otomatis berlangsung untuk mencari site terbaik. Daftar jelajah mendukung hingga 16 saluran, termasuk Saluran yang dipilih.

PEMBERITAHUAN:
Anda tidak dapat menambah atau menghapus entri dalam daftar jelajah secara manual. Untuk informasi lebih lanjut, hubungi dealer Anda.

6.7

Capacity Plus–Single-Site

Capacity Plus–Single-Site merupakan konfigurasi trunking site tunggal pada sistem radio MOTOTRBO yang menggunakan rangkaian saluran untuk mendukung ratusan pengguna dan maksimum 254 Grup. Fitur ini memungkinkan radio secara efisien menggunakan sejumlah saluran terprogram yang tersedia saat berada dalam Mode Repeater.

Nada indikator negatif akan berbunyi jika Anda mencoba mengakses fitur yang tidak berlaku untuk Capacity Plus–Single-Site dengan menekan tombol yang dapat diprogram.

Radio juga memiliki fitur yang tersedia dalam mode digital konvensional, IP Site Connect, dan Capacity Plus. Namun demikian, perbedaan-perbedaan kecil tentang cara masing-masing fitur berfungsi tidak memengaruhi kinerja radio Anda.

Untuk informasi lebih lanjut tentang konfigurasi ini, hubungi dealer atau administrator sistem.

6.8

Capacity Plus–Multi-Site

Capacity Plus–Multi-Site adalah konfigurasi trunking multisaluran pada sistem radio MOTOTRBO, yang menggabungkan konfigurasi terbaik Capacity Plus dan IP Site Connect.

Capacity Plus–Multi-Site memungkinkan radio Anda memperluas komunikasi trunking melampaui jangkauan satu site dengan menyambung ke site lain yang tersedia dan tersambung dengan jaringan IP. Fitur ini juga memberikan peningkatan kapasitas dengan memanfaatkan gabungan jumlah saluran yang telah diprogram secara efisien yang didukung oleh setiap site yang tersedia.

Bila radio keluar dari jangkauan satu site dan masuk ke jangkauan site lainnya, maka radio akan tersambung ke repeater site baru untuk mengirim atau menerima panggilan/transmisi data. Hal ini dilakukan secara otomatis atau manual, bergantung pada pengaturan radio Anda.

Jika diatur untuk melakukannya secara otomatis, radio akan menelusuri semua site yang tersedia bila sinyal dari site aktif lemah atau bila radio tidak dapat mendeteksi sinyal apa pun dari site aktif. Selanjutnya, radio akan terkunci ke repeater dengan nilai RSSI terkuat.

Pada pencarian site secara manual, radio mencari site berikutnya dalam daftar roaming yang saat ini berada dalam jangkauan (tetapi mungkin tidak memiliki sinyal terkuat), lalu terkunci pada site tersebut.

Saluran apa pun yang mengaktifkan Capacity Plus–Multi-Site dapat ditambahkan ke daftar jelajah tertentu. Radio mencari saluran tersebut selama pengoperasian jelajah otomatis untuk mencari site terbaik.

PEMBERITAHUAN:
Anda tidak dapat menambah atau menghapus entri dalam daftar jelajah secara manual. Tanyakan kepada dealer atau administrator sistem Anda untuk informasi selengkapnya.

Serupa dengan Capacity Plus–Single Site, ikon fitur yang tidak tersedia untuk Capacity Plus–Multi-Site tidak tersedia dalam menu. Nada indikator negatif akan berbunyi jika Anda mencoba mengakses fitur yang tidak berlaku untuk Capacity Plus–Multi-Site dengan menekan tombol yang dapat diprogram.

6.9

Pemilihan Zona dan Saluran

Bab ini menjelaskan pengoperasian untuk memilih zona atau saluran di radio Anda. Zona adalah suatu grup saluran.

Radio Anda mendukung hingga 99 saluran dan 2 zona, dengan maksimum 99 saluran per zona.

Setiap saluran dapat diprogram dengan fitur yang berbeda dan/atau mendukung grup pengguna yang berbeda.

6.9.1

Memilih Zona

Ikuti prosedur untuk memilih zona yang diperlukan di radio Anda.

1 Lakukan salah satu langkah berikut:
   - Tekan tombol **Pemilihan Zona** terprogram. Lanjutkan ke langkah 3.
   - Tekan OK untuk mengakses menu.

2 Tekan ▲ atau ▼ ke Zona. Tekan OK untuk memilih.

Layar menampilkan ✓ dan zona saat ini.

3 Tekan ▲ atau ▼ ke zona yang diinginkan.

Tekan OK untuk memilih.

Layar sesaat menampilkan pesan <Zona> Terpilih dan kembali ke layar zona yang dipilih.

6.9.2

Memilih Zona Menggunakan Pencarian Alias

Ikuti prosedur untuk memilih zona yang diperlukan di radio Anda menggunakan pencarian alias.

1 Tekan OK untuk mengakses menu.

2 Tekan ▲ atau ▼ ke Zona. Tekan OK untuk memilih.

Layar menampilkan ✓dan zona saat ini.

3 Masukkan karakter pertama dari alias yang diinginkan.

Layar menampilkan kursor berkedip.

4 Masukkan sisa karakter dari alias yang diperlukan.

Pencarian alias peka terhadap huruf besar-kecil. Jika terdapat dua entri atau lebih dengan nama yang sama, layar akan menampilkan entri pertama yang tercantum dalam daftar.

Baris teks pertama menampilkan karakter yang Anda masukkan. Baris teks berikut ini menampilkan hasil pencarian daftar pendek.

5 Tekan OK untuk memilih.

Layar menampilkan sesaat pesan <Zona> Terpilih dan kembali ke layar zona yang dipilih.

6.9.3

Memilih Saluran

Ikuti prosedur untuk memilih saluran yang diperlukan di radio Anda.

Lakukan salah satu langkah berikut:

- Tekan tombol **Gulir Atas/Bawah**.
- Gunakan **Kenop Volume/Saluran**.
- Tekan tombol **Saluran Naik/Turun** terprogram.

PEMBERITAHUAN:
Jika **Penghenti Saluran Virtual** diaktifkan, radio Anda akan menghentikan operasinya sebelum saluran pertama atau terakhir, lalu nada akan berbunyi.

6.10

Panggilan

Bab ini menjelaskan pengoperasian untuk menerima, merespons, melakukan, dan menghentikan panggilan.

Anda dapat memilih alias atau ID subscriber, atau alias atau ID grup setelah memilih saluran menggunakan satu dari fitur-fitur berikut ini:

Pencarian Alias
Metode ini digunakan untuk Panggilan Grup, Pribadi, dan Semua Panggilan saja dengan mikrofon keypad.

Daftar Kontak
Metode ini memberikan akses langsung ke daftar Kontak.

Panggilan Manual (menggunakan Kontak)
Metode ini digunakan untuk Panggilan Pribadi dan Telepon saja dengan mikrofon keypad.

Tombol Angka Terprogram
Metode ini digunakan untuk Panggilan Grup, Pribadi, dan Semua Panggilan saja dengan mikrofon keypad.

PEMBERITAHUAN:
Anda hanya dapat mempunyai satu alias atau ID yang dialokasikan ke satu tombol angka, tetapi beberapa tombol angka dapat dialokasikan ke satu alias atau ID. Semua tombol angka pada mikrofon keypad dapat dialokasikan. Lihat Mengalokasikan Entri ke Tombol Angka yang Dapat Diprogram di halaman 442 untuk informasi selengkapnya.

Tekan Tombol Akses Satu Sentuhan
Metode ini hanya digunakan untuk Panggilan Grup, Pribadi, dan Telepon.

Hanya satu ID yang dapat dialokasikan ke tombol **Akses Satu Sentuhan** dengan menekan tombol yang dapat diprogram lama atau sebentar. Radio Anda bisa mempunyai beberapa tombol **Akses Satu Sentuhan** terprogram.

Tombol yang Dapat Diprogram
Metode ini digunakan untuk Panggilan Telepon saja.

Kenop Pemilih Saluran/Volume
Metode ini memilih alias atau ID subscriber, maupun alias atau ID grup secara manual.

Lampu LED menyala hijau tidak terputus ketika radio sedang mengirimkan transmisi dan berkedip ketika radio sedang menerima.

PEMBERITAHUAN:
Lampu LED menyala hijau tidak terputus ketika radio sedang mentransmisikan dan berkedip hijau dua kali ketika radio menerima panggilan dengan privasi diaktifkan.

Untuk menguraikan panggilan dengan privasi aktif, radio harus memiliki Kunci Privasi, atau Nilai Kunci dan ID Kunci yang sama (diprogram oleh dealer) seperti radio yang melakukan transmisi (radio yang mengirimkan panggilan kepada Anda).

Lihat Privasi di halaman 496 untuk informasi selengkapnya.

6.10.1
Panggilan Grup

Radio harus dikonfigurasikan sebagai bagian dari grup untuk menerima panggilan dari atau melakukan panggilan ke sekelompok pengguna.

6.10.1.1
Melakukan Panggilan Grup

Ikuti prosedur untuk melakukan Panggilan Grup di radio Anda.

1 Lakukan salah satu langkah berikut:
- Pilih saluran dengan ID atau alias grup yang aktif.
- Tekan tombol **Akses Satu Sentuhan** terprogram.

2 Tekan tombol **PTT** untuk melakukan panggilan.

LED hijau akan menyala. Layar menampilkan ikon **Panggilan Grup** dan alias panggilan grup.

3 Lepaskan tombol **PTT** untuk mendengarkan.

LED hijau akan menyala jika radio target merespons. Layar menampilkan ikon **Panggilan Grup,** alias atau ID grup, dan alias atau ID radio yang melakukan transmisi.

4 Jika fitur Indikasi Saluran Bebas diaktifkan, nada peringatan singkat akan berbunyi saat pengguna radio yang melakukan transmisi melepaskan tombol **PTT**, yang menunjukkan saluran bebas dapat Anda gunakan untuk merespons. Tekan tombol **PTT** untuk menjawab panggilan.

Panggilan berakhir jika tidak ada aktivitas suara selama waktu yang telah ditentukan. Radio kembali ke layar sebelum Anda melakukan panggilan.

6.10.1.2

Melakukan Panggilan Grup Menggunakan Daftar Kontak

Ikuti prosedur untuk melakukan Panggilan Grup di radio Anda menggunakan daftar Kontak.

1 Tekan OK untuk mengakses menu.

2 Tekan ▲ atau ▼ ke Kontak.Tekan OK untuk memilih.

3 Tekan ▲ atau ▼ ke alias atau ID yang diinginkan.Tekan OK untuk memilih.

4 Tekan tombol **PTT** untuk melakukan panggilan.

LED hijau akan menyala.

5 Lepaskan tombol **PTT** untuk mendengarkan.

LED hijau berkedip ketika ada pengguna dalam grup yang merespons. Layar menampilkan ikon dan alias

atau ID **Panggilan Grup**, serta alias atau ID radio yang melakukan transmisi.

6 Jika fitur Indikasi Saluran Bebas diaktifkan, nada peringatan singkat akan berbunyi saat pengguna radio yang melakukan transmisi melepaskan tombol **PTT**, yang menunjukkan saluran bebas dapat Anda gunakan untuk merespons.Tekan tombol **PTT** untuk menjawab panggilan.

Panggilan berakhir jika tidak ada aktivitas suara selama waktu yang telah ditentukan.

6.10.1.3

Melakukan Panggilan Grup Menggunakan Tombol Angka yang Dapat Diprogram

Ikuti prosedur untuk melakukan Panggilan Grup di radio Anda menggunakan tombol angka yang dapat diprogram.

1 Tekan lama tombol angka terprogram ke alias atau ID yang telah ditentukan ketika Anda berada di layar Awal.

Jika sebuah tombol angka dialokasikan untuk sebuah entri dalam mode tertentu, fitur ini tidak didukung apabila Anda menekan lama tombol angka dalam mode yang lain.

Nada indikator negatif akan terdengar jika tombol angka tidak berhubungan dengan sebuah entri.

2 Tekan tombol **PTT** untuk melakukan panggilan.

LED hijau akan menyala.

3 Lepaskan tombol **PTT** untuk mendengarkan.

LED hijau berkedip ketika ada pengguna dalam grup yang merespons.

4 Jika fitur Indikasi Saluran Bebas diaktifkan, nada peringatan singkat akan berbunyi saat pengguna radio yang melakukan transmisi melepaskan tombol **PTT**, yang menunjukkan saluran bebas dapat Anda gunakan untuk merespons. Tekan tombol **PTT** untuk menjawab panggilan.

Panggilan berakhir jika tidak ada aktivitas suara selama waktu yang telah ditentukan. Radio kembali ke layar sebelum Anda melakukan panggilan.

Lihat Mengalokasikan Entri ke Tombol Angka yang Dapat Diprogram di halaman 442 untuk informasi selengkapnya.

6.10.1.4

Merespons Panggilan Grup

Untuk menerima panggilan dari sebuah grup, radio Anda harus dikonfigurasi sebagai bagian dari grup itu. Ikuti prosedur untuk merespons Panggilan Grup di radio Anda.

Bila menerima Panggilan Grup:

- LED akan berkedip hijau.
- Layar menampilkan ikon **Panggilan Grup** di sudut kanan atas.
- Baris teks pertama menampilkan alias pemanggil.
- Baris teks kedua menunjukkan alias panggilan grup.
- Radio bersuara dan panggilan masuk berbunyi melalui speaker.

1 Lakukan salah satu langkah berikut:

- Jika fitur Indikasi Saluran Bebas diaktifkan, nada peringatan singkat akan berbunyi saat pengguna radio yang melakukan transmisi melepaskan tombol **PTT**, yang menunjukkan saluran bebas dapat Anda gunakan untuk merespons. Tekan tombol **PTT** untuk menjawab panggilan.
- Jika Interupsi Suara diaktifkan, tekan tombol **PTT** untuk menginterupsi audio dari radio yang melakukan transmisi dan membebaskan saluran sehingga Anda dapat merespons.

LED hijau akan menyala.

2 Lakukan salah satu langkah berikut:

- Tunggu hingga Nada Izin Bicara selesai dan bicaralah dengan jelas ke mikrofon, jika diaktifkan.
- Tunggu hingga Sidetone **PTT** selesai dan bicaralah dengan jelas ke mikrofon, jika diaktifkan.

3 Lepaskan tombol **PTT** untuk mendengarkan.

Panggilan berakhir jika tidak ada aktivitas suara selama waktu yang telah ditentukan.

Jika radio menerima Panggilan Grup ketika tidak berada di layar Awal, radio akan tetap di layarnya sekarang sebelum menjawab panggilan.

Tekan lama untuk kembali ke layar Awal dan melihat alias pemanggil sebelum membalas.

6.10.2

Panggilan Pribadi

Panggilan Pribadi adalah sebuah panggilan dari radio perorangan ke radio perorangan lainnya.

Ada dua cara untuk menyiapkan Panggilan Pribadi. Jenis pertama adalah menyiapkan panggilan setelah melakukan pemeriksaan kehadiran radio, dan jenis kedua menyiapkan panggilan dengan segera. Hanya satu dari kedua jenis panggilan ini yang dapat diprogram untuk radio Anda oleh dealer.

6.10.2.1

Melakukan Panggilan Pribadi

Radio Anda harus diprogram sebelum memulai Panggilan Pribadi. Jika fitur ini tidak diaktifkan, nada indikator negatif berbunyi ketika Anda memulai panggilan. Ikuti prosedur untuk melakukan Panggilan Pribadi di radio Anda.

Gunakan fitur Pesan Teks atau Peringatan Panggilan untuk menghubungi radio individual. Untuk informasi selengkapnya, lihat Pengolahan Pesan Teks di halaman 164 atau Operasi Peringatan Panggilan di halaman 453 .

1 Lakukan salah satu langkah berikut:
   - Pilih saluran dengan ID atau alias subscriber yang aktif.
   - Tekan tombol **Akses Satu Sentuhan** terprogram.

2 Tekan tombol **PTT** untuk melakukan panggilan.

   LED hijau akan menyala. Layar menampilkan ikon **Panggilan Pribadi,** alias subscriber, dan status panggilan.

3 Tunggu hingga Nada Izin Bicara selesai dan bicaralah dengan jelas ke mikrofon, jika diaktifkan.

4 Lepaskan tombol **PTT** untuk mendengarkan.

   LED hijau akan berkedip jika radio target merespons.

5 Jika fitur Indikasi Saluran Bebas diaktifkan, nada peringatan singkat akan berbunyi saat pengguna radio yang melakukan transmisi melepaskan tombol

PTT, yang menunjukkan saluran bebas dapat Anda gunakan untuk merespons. Tekan tombol **PTT** untuk menjawab panggilan.

Panggilan berakhir jika tidak ada aktivitas suara selama waktu yang telah ditentukan. Nada akan berbunyi. Layar menampilkan pesan `Panggilan Diakhiri.`

6.10.2.2

Melakukan Panggilan Pribadi Menggunakan Daftar Kontak

1 Tekan [OK] untuk mengakses menu.

2 Tekan [▲] atau [▼] ke `Kontak`. Tekan [OK] untuk memilih.

3 Tekan [▲] atau [▼] ke alias atau ID yang diinginkan. Tekan [OK] untuk memilih.

4 Tekan tombol **PTT** untuk melakukan panggilan.

LED hijau akan menyala. Layar menampilkan alias tujuan.

5 Tunggu hingga Nada Izin Bicara selesai dan bicaralah dengan jelas ke mikrofon, jika diaktifkan.

6 Lepaskan tombol **PTT** untuk mendengarkan.

LED hijau akan berkedip jika radio target merespons. Layar akan menampilkan alias atau ID pengguna yang melakukan transmisi.

7 Jika fitur Indikasi Saluran Bebas diaktifkan, nada peringatan singkat akan berbunyi saat pengguna radio yang melakukan transmisi melepaskan tombol **PTT**, yang menunjukkan saluran bebas dapat Anda gunakan untuk merespons. Tekan tombol **PTT** untuk menjawab panggilan.

Panggilan berakhir jika tidak ada aktivitas suara selama waktu yang telah ditentukan. Nada akan berbunyi. Layar menampilkan pesan `Panggilan Diakhiri.`

6.10.2.3

Melakukan Panggilan Pribadi Menggunakan Panggilan Manual

Ikuti prosedur untuk melakukan Panggilan Pribadi di radio Anda menggunakan panggilan manual.

1 Tekan OK untuk mengakses menu.

2 Tekan ▲ atau ▼ ke `Kontak`. Tekan OK untuk memilih.

3 Tekan ▲ atau ▼ ke `Panggilan Manual`.

Tekan OK untuk memilih.

4 Tekan ▲ atau ▼ ke `Nomor Radio`. Tekan OK untuk memilih.

5 Lakukan salah satu langkah berikut:

- Masukkan ID subscriber, lalu tekan OK untuk melanjutkan.
- Edit ID subscriber yang dipanggil sebelumnya, lalu tekan OK untuk melanjutkan.

6 Tekan tombol **PTT** untuk melakukan panggilan.

LED hijau akan menyala. Layar menampilkan alias tujuan.

7 Tunggu hingga Nada Izin Bicara selesai dan bicaralah dengan jelas ke mikrofon, jika diaktifkan.

8 Lepaskan tombol **PTT** untuk mendengarkan.

LED hijau akan menyala jika radio target merespons. Layar akan menampilkan alias atau ID pengguna yang melakukan transmisi.

9 Jika fitur Indikasi Saluran Bebas diaktifkan, nada peringatan singkat akan berbunyi saat pengguna radio yang melakukan transmisi melepaskan tombol **PTT**, yang menunjukkan saluran bebas dapat Anda gunakan untuk merespons. Tekan tombol **PTT** untuk menjawab panggilan.

Panggilan berakhir jika tidak ada aktivitas suara selama waktu yang telah ditentukan. Nada akan

berbunyi. Layar menampilkan pesan `Panggilan Diakhiri`.

6.10.2.4

Melakukan Panggilan Pribadi Menggunakan Tombol Angka yang Dapat Diprogram

Ikuti prosedur untuk melakukan Panggilan Pribadi di radio Anda menggunakan tombol angka yang dapat diprogram.

1 Tekan lama tombol angka terprogram ke alias atau ID yang telah ditentukan ketika Anda berada di layar Awal.

Jika sebuah tombol angka dialokasikan untuk sebuah entri dalam mode tertentu, fitur ini tidak didukung apabila Anda menekan lama tombol angka dalam mode yang lain.

Nada indikator negatif akan terdengar jika tombol angka tidak berhubungan dengan sebuah entri.

2 Tekan tombol **PTT** untuk melakukan panggilan.

LED hijau akan menyala. Layar menampilkan ikon **Panggilan Pribadi** di sudut kanan atas. Baris teks pertama menampilkan alias pemanggil. Baris teks kedua menunjukkan status panggilan.

3 Lepaskan tombol **PTT** untuk mendengarkan.

LED hijau akan berkedip jika radio target merespons. Layar menampilkan alias tujuan.

4 Jika fitur Indikasi Saluran Bebas diaktifkan, nada peringatan singkat akan berbunyi saat pengguna radio yang melakukan transmisi melepaskan tombol **PTT**, yang menunjukkan saluran bebas dapat Anda gunakan untuk merespons.Tekan tombol **PTT** untuk menjawab panggilan.

Panggilan berakhir jika tidak ada aktivitas suara selama waktu yang telah ditentukan.Nada akan berbunyi. Radio kembali ke layar sebelum Anda melakukan panggilan.

Lihat Mengalokasikan Entri ke Tombol Angka yang Dapat Diprogram di halaman 442 untuk informasi selengkapnya.

6.10.2.5

Merespons Panggilan Pribadi

Ikuti prosedur untuk merespons Panggilan Pribadi di radio Anda.

Apabila Anda menerima panggilan pribadi:

- LED akan berkedip hijau.
- Radio bersuara dan panggilan masuk berbunyi melalui speaker.

1 Lakukan salah satu langkah berikut:

- Jika fitur Indikasi Saluran Bebas diaktifkan, nada peringatan singkat akan berbunyi saat pengguna radio yang melakukan transmisi melepaskan tombol **PTT**, yang menunjukkan saluran bebas dapat Anda gunakan untuk merespons. Tekan tombol **PTT** untuk menjawab panggilan.
- Jika fitur Mengirimkan Transmisi Interupsi Dekey Jarak Jauh diaktifkan, tekan tombol **PTT** untuk menghentikan panggilan yang dapat diinterupsi yang sedang berlangsung dan membebaskan saluran sehingga Anda dapat merespons.

LED hijau akan menyala.

2 Tunggu hingga Nada Izin Bicara selesai dan bicaralah dengan jelas ke mikrofon, jika diaktifkan.

3 Lepaskan tombol **PTT** untuk mendengarkan.

Panggilan berakhir jika tidak ada aktivitas suara selama waktu yang telah ditentukan.

6.10.3

Semua Panggilan

Semua Panggilan adalah panggilan dari sebuah radio perorangan ke setiap radio pada saluran tersebut. Semua Panggilan digunakan untuk melakukan pengumuman penting yang memerlukan perhatian penuh dari pengguna. Pengguna pada saluran ini tidak dapat merespons Semua Panggilan.

6.10.3.1

Menerima Semua Panggilan

Apabila Anda menerima sebuah Semua Panggilan:

- Nada akan berbunyi.
- LED akan berkedip hijau.
- Layar menampilkan ikon **Panggilan Grup** di sudut kanan atas.
- Baris teks pertama menampilkan ID alias pemanggil.
- Baris teks kedua menampilkan `Semua Panggilan`.
- Radio bersuara dan panggilan masuk berbunyi melalui speaker.

Ketika panggilan berakhir, radio kembali ke layar sebelum menerima Semua Panggilan.

Sebelum berakhir, Semua Panggilan tidak menunggu selama waktu yang telah ditentukan sebelumnya.

Jika fitur Indikasi Saluran Bebas diaktifkan, Anda akan mendengar nada peringatan singkat pada saat radio yang melakukan transmisi melepaskan tombol **PTT**, yang menunjukkan bahwa saluran sudah bebas untuk Anda gunakan.

Anda tidak bisa menjawab Semua Panggilan.

PEMBERITAHUAN:
Radio berhenti menerima Semua Panggilan jika Anda beralih ke saluran lain ketika menerima panggilan tersebut. Anda tidak dapat melanjutkan navigasi menu atau mengedit sampai Semua Panggilan berakhir.

6.10.3.2

Melakukan Semua Panggilan

Radio harus diprogram sebelum Anda dapat melakukan Semua Panggilan. Ikuti prosedur untuk melakukan Semua Panggilan di radio Anda.

1. Pilih saluran dengan ID atau alias grup Semua Panggilan yang aktif.
2. Tekan tombol **PTT** untuk melakukan panggilan.

   LED hijau akan menyala. Layar menampilkan ikon **Panggilan Grup** dan `Semua Panggilan`.
3. Lakukan salah satu langkah berikut:
   - Tunggu hingga Nada Izin Bicara selesai dan bicaralah dengan jelas ke mikrofon, jika diaktifkan.

- Tunggu hingga Sidetone **PTT** selesai dan bicaralah dengan jelas ke mikrofon, jika diaktifkan.

Pengguna pada saluran ini tidak bisa menjawab Semua Panggilan.

6.10.3.3

Melakukan Semua Panggilan Menggunakan Tombol Angka yang Dapat Diprogram

Ikuti prosedur untuk melakukan Semua Panggilan di radio Anda menggunakan tombol angka yang dapat diprogram.

1 Tekan lama tombol angka terprogram yang dialokasikan ke alias atau ID yang telah ditentukan ketika Anda berada di layar Awal.

Jika sebuah tombol angka dialokasikan untuk sebuah entri dalam mode tertentu, fitur ini tidak didukung apabila Anda menekan lama tombol angka dalam mode yang lain.

Nada indikator negatif akan terdengar jika tombol angka tidak berhubungan dengan sebuah entri.

2 Tekan tombol **PTT** untuk melakukan panggilan.

LED hijau akan menyala.

3 Lepaskan tombol **PTT** untuk mendengarkan.

LED hijau akan menyala jika radio target merespons. Anda tidak dapat menjawab Semua Panggilan pada saat ini.

4 Jika fitur Indikasi Saluran Bebas diaktifkan, nada peringatan singkat akan berbunyi saat pengguna radio yang melakukan transmisi melepaskan tombol **PTT**, yang menunjukkan saluran bebas dapat Anda gunakan untuk merespons. Tekan tombol **PTT** untuk menjawab panggilan.

Panggilan berakhir jika tidak ada aktivitas suara selama waktu yang telah ditentukan. Radio kembali ke layar sebelum Anda melakukan panggilan. Untuk Panggilan Pribadi, Anda akan mendengar nada singkat setelah panggilan berakhir.

Lihat Mengalokasikan Entri ke Tombol Angka yang Dapat Diprogram di halaman 442 untuk informasi selengkapnya.

6.10.4

Panggilan Selektif

Panggilan Selektif adalah sebuah panggilan dari sebuah radio perorangan ke radio perorangan lainnya. Ini adalah Panggilan Pribadi pada sistem analog.

6.10.4.1

Melakukan Panggilan Selektif

Radio harus diprogram sebelum Anda memulai Panggilan Selektif. Ikuti prosedur untuk melakukan Panggilan Selektif di radio Anda.

1. Pilih saluran dengan ID atau alias subscriber yang aktif.
2. Tekan tombol **PTT** untuk melakukan panggilan.

   LED hijau akan menyala. Layar menampilkan ikon **Panggilan Pribadi,** alias subscriber, dan status panggilan.
3. Lakukan salah satu langkah berikut:
   - Tunggu hingga Nada Izin Bicara selesai dan bicaralah dengan jelas ke mikrofon, jika diaktifkan.
   - Tunggu hingga Sidetone **PTT** selesai dan bicaralah dengan jelas ke mikrofon, jika diaktifkan.
4. Lepaskan tombol **PTT** untuk mendengarkan.

   LED hijau akan menyala jika radio target merespons.
5. Jika fitur Indikasi Saluran Bebas diaktifkan, nada peringatan singkat akan berbunyi saat pengguna radio yang melakukan transmisi melepaskan tombol **PTT**, yang menunjukkan saluran bebas dapat Anda gunakan untuk merespons. Tekan tombol **PTT** untuk menjawab panggilan.

   Panggilan berakhir jika tidak ada aktivitas suara selama waktu yang telah ditentukan.
6. Layar menampilkan pesan `Panggilan Diakhiri.`

6.10.4.2

Merespons Panggilan Selektif

Ikuti prosedur untuk merespons Panggilan Selektif di radio Anda.

Apabila Anda menerima Panggilan Selektif:

- LED akan berkedip hijau.
- Baris teks pertama menampilkan ikon **Panggilan Pribadi** dan alias pemanggil atau `Panggilan Selektif` atau `Peringatan dengan Panggilan`.
- Radio bersuara dan panggilan masuk berbunyi melalui speaker.

1. Tekan tombol **PTT** untuk menjawab panggilan.

   LED hijau akan menyala.

2. Tunggu hingga Nada Izin Bicara selesai dan bicaralah dengan jelas ke mikrofon, jika diaktifkan.

3. Lepaskan tombol **PTT** untuk mendengarkan.

   Panggilan berakhir jika tidak ada aktivitas suara selama waktu yang telah ditentukan. Nada akan berbunyi.Layar menampilkan pesan `Panggilan Diakhiri`.

6.10.5

Panggilan Telepon

Panggilan Telepon adalah panggilan dari radio perorangan ke telepon.

Jika kemampuan Panggilan Telepon tidak diaktifkan pada radio:

- Layar menampilkan `Tidak tersedia`.
- Radio mensenyapkan panggilan.
- Radio kembali ke layar sebelumnya saat panggilan berakhir.

Selama Panggilan Telepon, radio mencoba mengakhiri panggilan jika:

- Anda menekan tombol **Akses Satu Sentuhan** dengan kode de-akses telah dikonfigurasikan.
- Anda memasukkan kode de-akses sebagai input untuk digit ekstra.

Selama akses saluran, kode akses atau de-akses, atau transmisi digit ekstra, radio Anda akan merespons tombol atau kenop **On/Off** , **Kontrol Volume**, dan **Pemilih**

Saluran saja. Nada akan berbunyi untuk tiap input yang tidak valid.

Selama akses saluran, tekan untuk menghentikan upaya panggilan. Nada akan berbunyi.

PEMBERITAHUAN:
Kode akses atau de-akses tidak boleh lebih dari 10 karakter.

Tanyakan kepada dealer atau administrator sistem Anda untuk informasi selengkapnya.

6.10.5.1

Melakukan Panggilan Telepon

Ikuti prosedur untuk melakukan Panggilan Telepon di radio Anda.

1 Tekan tombol **Akses Satu Sentuhan** terprogram ke alias atau ID yang telah ditentukan.

Jika entri untuk tombol **Akses Satu Sentuhan** kosong, nada indikator negatif akan berbunyi. Jika kode akses tidak dikonfigurasi sebelumnya dalam Daftar Kontak, layar akan menampilkan `Kode Akses:`.

2 Masukkan kode akses, lalu tekan OK untuk melanjutkan.

Kode akses atau de-akses tidak boleh lebih dari 10 karakter.

3 Tekan tombol **PTT** untuk menjawab panggilan. Lepaskan tombol **PTT** untuk mendengarkan.

4 Masukkan digit ekstra dengan keypad jika diminta oleh panggilan, lalu tekan OK untuk melanjutkan.

Jika panggilan berakhir saat Anda memasukkan digit ekstra yang diminta oleh panggilan, radio kembali ke layar yang dibuka sebelum Anda memulai panggilan.

Nada Multi Frekuensi Dual Tone (DTMF) berbunyi. Radio kembali ke layar sebelumnya.

5 Tekan untuk mengakhiri panggilan.

6 Lakukan salah satu langkah berikut:

- Jika kode de-akses belum dikonfigurasikan, masukkan kode de-akses ketika layar

menampilkan Kode De-Akses:, lalu tekan OK untuk melanjutkan.
Radio kembali ke layar sebelumnya.

- Tekan tombol **Akses Satu Sentuhan** terprogram. Jika entri untuk tombol **Akses Satu Sentuhan** kosong, nada indikator negatif akan berbunyi.

Nada DTMF berbunyi dan layar menampilkan Mengakhiri Panggilan Telepon.
Jika panggilan berhasil diakhiri:

- Nada akan berbunyi.
- Layar menampilkan pesan Panggilan Diakhiri.

Jika panggilan tidak berhasil diakhiri, radio kembali ke layar Panggilan Telepon. Ulangi dua langkah terakhir atau tunggu hingga pengguna telepon mengakhiri panggilan.

6.10.5.2

Melakukan Panggilan Telepon Menggunakan Daftar Kontak

Ikuti prosedur untuk melakukan Panggilan Telepon di radio Anda menggunakan daftar Kontak.

1 Tekan OK untuk mengakses menu.

2 Tekan ▲ atau ▼ ke Kontak. Tekan OK untuk memilih.

Layar menampilkan entri sesuai urutan abjad.

3 Tekan ▲ atau ▼ ke alias atau ID yang diinginkan. Tekan OK untuk memilih.

Jika Anda menekan tombol **PTT** ketika berada di layar Kontak Telepon:

- Baris pertama layar menampilkan Nomor Telepon:.
- Baris kedua layar menampilkan kursor yang berkedip.

Jika entri yang dipilih kosong:

- Nada indikator negatif akan berbunyi.
- Layar menampilkan pesan `Panggilan Telepon Tidak Valid #`.

4 Tekan ▲ atau ▼ ke `Panggilan Telepon`.

Tekan OK untuk memilih.

Layar menampilkan `Kode Akses:` jika kode akses tidak dikonfigurasikan di awal.

5 Masukkan kode akses, lalu tekan OK untuk melanjutkan.

Kode akses atau de-akses tidak boleh lebih dari 10 karakter.

Baris teks pertama akan menampilkan `Memanggil`. Baris kedua teks menampilkan alias atau ID subscriber, dan ikon **Panggilan Telepon**.
Jika panggilan berhasil:

- Nada DTMF akan berbunyi.
- Nada panggilan dari pengguna telepon akan terdengar.
- Baris pertama teks menampilkan alias atau ID subscriber dan ikon **RSSI**.
- Baris kedua teks menampilkan `Panggilan Telepon`, dan ikon **Panggilan Telepon**.

Jika panggilan tidak berhasil:

- Nada akan berbunyi.
- Layar menampilkan `Panggilan Telepon Gagal` lalu, `Kode Akses:`.
- Radio kembali ke layar yang dibuka sebelum Anda memulai panggilan jika kode akses telah dikonfigurasikan sebelumnya di daftar Kontak.

6 Tekan tombol **PTT** untuk menjawab panggilan.

Ikon **RSSI** muncul.

7 Lepaskan tombol **PTT** untuk mendengarkan.

8 Masukkan digit ekstra dengan keypad jika diminta oleh panggilan, lalu tekan OK untuk melanjutkan.

Jika panggilan berakhir saat Anda memasukkan digit ekstra yang diminta oleh panggilan, radio kembali ke layar yang dibuka sebelum Anda memulai panggilan.

Nada DTMF akan berbunyi. Radio kembali ke layar sebelumnya.

9 Tekan untuk mengakhiri panggilan.

10 Jika kode de-akses belum dikonfigurasikan, masukkan kode de-akses ketika layar menampilkan `Kode De-Akses:`, lalu tekan OK untuk melanjutkan.

Radio kembali ke layar sebelumnya. Nada DTMF berbunyi dan layar menampilkan `Mengakhiri Panggilan Telepon`.
Jika panggilan berhasil diakhiri:

- Nada akan berbunyi.
- Layar menampilkan pesan `Panggilan Diakhiri`.

Jika panggilan tidak berhasil diakhiri, radio kembali ke layar Panggilan Telepon. Ulangi langkah 9 dan langkah 10, atau tunggu hingga pengguna telepon mengakhiri panggilan. Jika Anda menekan tombol **PTT** saat berada di layar Kontak Telepon, nada akan berbunyi dan layar menampilkan `Tekan OK untuk Melakukan Panggilan`.

Jika pengguna telepon mengakhiri panggilan, nada berbunyi dan layar menampilkan `dan layar menampilkan Panggilan Telepon Diakhiri`.

Jika panggilan berakhir saat Anda memasukkan digit ekstra yang diminta oleh Panggilan Telepon, radio

kembali ke layar yang dibuka sebelum Anda memulai panggilan.

PEMBERITAHUAN:

Selama akses saluran, tekan untuk menghentikan percobaan panggilan dan nada akan berbunyi.

Selama panggilan, saat Anda menekan tombol **Akses Satu Sentuhan** dengan kode de-akses yang dikonfigurasi sebelumnya atau memasukkan kode de-akses sebagai input untuk digit ekstra, radio akan mencoba mengakhiri panggilan.

Saat mengakses saluran dan melakukan transmisi kode akses/de-akses atau digit ekstra, radio hanya merespons tombol **On/Off**, **Kenop Volume**, dan **Pemilih Saluran**. Nada akan berbunyi untuk tiap input yang tidak valid.

6.10.5.3

Melakukan Panggilan Telepon Menggunakan Panggilan Manual

Ikuti prosedur untuk melakukan Panggilan Telepon di radio Anda menggunakan panggilan manual.

1. Tekan OK untuk mengakses menu.
2. Tekan atau ke `Kontak`.Tekan OK untuk memilih.
3. Tekan atau ke `Panggilan Manual`.

   Tekan OK untuk memilih.
4. Tekan atau ke `Nomor Telepon`. Tekan OK untuk memilih.

   Layar menampilkan `Nomor:` dan kursor berkedip.
5. Masukkan nomor telepon, lalu tekan OK untuk melanjutkan.

   Layar menampilkan `Kode Akses:` dan kursor berkedip jika kode akses belum dikonfigurasikan.
6. Masukkan kode akses, lalu tekan OK untuk melanjutkan.

Kode akses atau de-akses tidak boleh lebih dari 10 karakter.

7 LED hijau akan menyala. Layar menampilkan ikon **Panggilan Telepon** di sudut kanan atas. Baris teks pertama menunjukkan alias subscriber. Baris teks kedua menunjukkan status panggilan.
Jika panggilan berhasil:

- Nada DTMF akan berbunyi.
- Nada panggilan dari pengguna telepon akan terdengar.
- Baris teks pertama menunjukkan alias subscriber.
- Layar terus menampilkan ikon **Panggilan Telepon** di sudut kanan atas.

Jika panggilan tidak berhasil:

- Nada akan berbunyi.
- Layar menampilkan `Panggilan Telepon Gagal` lalu, `Kode Akses:`.
- Radio kembali ke layar yang dibuka sebelum memulai panggilan jika kode akses telah dikonfigurasikan sebelumnya di daftar Kontak.

8 Tekan untuk mengakhiri panggilan.

9 Lakukan salah satu langkah berikut:

- Jika kode de-akses belum dikonfigurasikan, masukkan kode de-akses ketika layar menampilkan `Kode De-Akses:`, lalu tekan OK untuk melanjutkan.
  Radio kembali ke layar sebelumnya.
- Tekan tombol **Akses Satu Sentuhan** terprogram. Jika entri untuk tombol **Akses Satu Sentuhan** kosong, nada indikator negatif akan berbunyi.

Nada DTMF berbunyi dan layar menampilkan `Mengakhiri Panggilan Telepon`.
Jika panggilan berhasil diakhiri:

- Nada akan berbunyi.
- Layar menampilkan pesan `Panggilan Diakhiri`.

Jika panggilan tidak berhasil diakhiri, radio kembali ke layar Panggilan Telepon. Ulangi langkah 8, atau

tunggu hingga pengguna telepon mengakhiri panggilan.

PEMBERITAHUAN:
Saat Anda menekan tombol **PTT** saat berada di layar Kontak Telepon, nada akan berbunyi dan `layar menampilkan Press OK to Place Phone Call (Tekan OK untuk Melakukan Panggilan).`

Saat pengguna telepon mengakhiri panggilan, nada akan berbunyi dan layar akan menampilkan `Panggilan Diakhiri.`

Jika panggilan berakhir saat Anda memasukkan digit ekstra yang diminta oleh Panggilan Telepon, radio kembali ke layar yang dibuka sebelum Anda memulai panggilan.

Selama akses saluran, tekan untuk menghentikan percobaan panggilan dan nada akan berbunyi.

Selama panggilan, saat Anda menekan tombol **Akses Satu Sentuhan** dengan kode de-akses yang dikonfigurasi sebelumnya atau memasukkan kode de-akses sebagai input untuk digit ekstra, radio akan mencoba mengakhiri panggilan.

Saat mengakses saluran dan melakukan transmisi kode akses/de-akses atau digit ekstra, radio hanya merespons tombol **On/Off**, **Kenop Volume**, dan **Pemilih Saluran**. Nada akan berbunyi untuk tiap input yang tidak valid.

6.10.5.4

Melakukan Panggilan Grup, Pribadi, Telepon, atau Semua Panggilan Menggunakan Pencarian Alias

Ikuti prosedur untuk melakukan panggilan apa pun menggunakan pencarian alias.

1 Tekan OK untuk mengakses menu.

2 Tekan ▲ atau ▼ ke `Kontak`. Tekan OK untuk memilih.

Layar menampilkan entri sesuai urutan abjad.

3 Tekan ▲ atau ▼ ke alias atau ID subscriber yang diinginkan. Baris pertama layar menampilkan `Nomor Telepon:`. Baris kedua layar menampilkan kursor yang berkedip. Gunakan keypad untuk memasukkan nomor telepon.

4 Tekan OK untuk memilih. Jika entri yang dipilih kosong, nada indikator negatif akan berbunyi dan layar menampilkan `Phone Call Invalid #` (Panggilan Telepon Tidak Valid #).

5 Tekan ▲ atau ▼ ke Panggil Telepon dan

Tekan OK untuk memilih. Jika kode akses tidak dikonfigurasi sebelumnya dalam daftar Kontak, baris pertama pada layar menampilkan `Kode Akses:`. Baris kedua layar menampilkan kursor yang berkedip. Masukkan kode akses dan tekan tombol

OK untuk melanjutkan. Jika berhasil, nada DTMF terdengar. Nada panggilan dari pengguna telepon akan terdengar. Baris pertama layar menampilkan alias atau ID subscriber, dan ikon RSSI. Baris kedua layar menampilkan `Panggil Telepon` dan ikon Panggilan Telepon. Jika tidak berhasil, nada

terdengar dan layar menampilkan `Panggilan Telepon Gagal`. Radio Anda kembali ke layar input Kode Akses. Jika kode akses telah dikonfigurasi sebelumnya di daftar Kontak, radio akan kembali ke layar tempat Anda berada sebelum memulai panggilan.

6 Tekan tombol **PTT** untuk berbicara dan lepaskan untuk mendengarkan. Ikon RSSI tidak ditampilkan selama transmisi.

7 Untuk memasukkan digit ekstra, jika diminta oleh Panggilan Telepon, lakukan salah satu hal berikut.

- Tekan sembarang tombol keypad untuk mulai memasukkan digit ekstra. Baris pertama layar menampilkan `Digit Ekstra:`. Baris kedua layar menampilkan kursor yang berkedip. Masukkan digit ekstra dan tekan tombol OK untuk melanjutkan. Nada DTMF terdengar dan radio kembali ke layar sebelumnya.
- Tekan tombol **Akses Satu Sentuhan**. Nada DTMF akan berbunyi. Jika entri untuk tombol **Akses Satu Sentuhan** kosong, nada indikator negatif akan berbunyi.

8 Tekan untuk mengakhiri panggilan. Jika kode de-akses tidak dikonfigurasi sebelumnya dalam daftar Kontak, baris pertama layar akan menampilkan `De-Access Code:` (Kode De-Akses:). Baris kedua layar menampilkan kursor yang berkedip. Masukkan kode de-akses dan tekan OK untuk melanjutkan. Radio kembali ke layar sebelumnya. Nada DTMF berbunyi dan layar menampilkan `Ending Phone Call` (Mengakhiri Panggilan Telepon). Jika berhasil, nada terdengar dan layar menampilkan Panggilan Telepon Diakhiri. Radio Anda kembali ke layar Panggilan Telepon. Jika tidak berhasil, radio Anda kembali ke layar Panggilan Telepon. Jika Anda menekan tombol **PTT** saat berada di layar Kontak Telepon, nada akan berbunyi dan layar menampilkan `Tekan OK untuk Melakukan Panggilan`. Jika pengguna telepon mengakhiri panggilan, nada berbunyi dan layar menampilkan `dan layar menampilkan Phone Call Ended (Panggilan Telepon Diakhiri)`. Jika panggilan berakhir saat Anda memasukkan digit ekstra yang diminta oleh Panggilan Telepon, radio

kembali ke layar yang dibuka sebelum Anda memulai panggilan.

PEMBERITAHUAN:

Selama akses saluran, tekan untuk menghentikan percobaan panggilan dan nada akan berbunyi atau untuk keluar dari pencarian alias.

Tekan OK atau untuk keluar dari pencarian alias. Selama panggilan, saat Anda menekan tombol **Akses Satu Sentuhan** dengan kode de-akses yang dikonfigurasi sebelumnya atau memasukkan kode de-akses sebagai input untuk digit ekstra, radio akan mencoba mengakhiri panggilan. Saat mengakses saluran dan melakukan transmisi kode akses/de-akses atau digit ekstra, radio hanya merespons tombol On/Off, Kenop Volume, dan Pemilih Saluran. Nada akan berbunyi untuk tiap input yang tidak valid.

6.10.5.5

Multi-Frekuensi Nada Ganda

Fitur Multi Frekuensi Dual Tone (DTMF) memungkinkan radio beroperasi dalam sistem radio dengan antarmuka ke sistem telepon.

Menonaktifkan semua nada radio dan peringatan akan menonaktifkan nada DTMF secara otomatis.

6.10.5.5.1

Mengaktifkan Nada DTMF

Ikuti prosedur untuk mengaktifkan nada DTMF di radio Anda.

1 Tekan dan tahan tombol **PTT**.

2 Lakukan salah satu langkah berikut:

- Masukkan nomor yang diinginkan untuk mengaktifkan nada DTMF.
- Tekan untuk mengaktifkan nada DTMF.
- Tekan untuk mengaktifkan nada DTMF.

6.10.5.6

Merespons Panggilan Telepon sebagai Panggilan Grup

Ikuti prosedur untuk merespons Panggilan Telepon sebagai Panggilan Grup di radio Anda.

Saat menerima Panggilan Telepon sebagai Panggilan Grup:

- Layar menampilkan ikon **Panggilan Telepon** di sudut kanan atas.
- Layar menampilkan alias grup atau `Panggilan Telepon`.

Jika kemampuan Panggilan Telepon tidak diaktifkan pada radio, baris pertama layar akan menunjukkan `Tidak Tersedia` dan radio Anda membisukan panggilan. Radio kembali ke layar sebelumnya saat panggilan berakhir.

1 Tekan tombol **PTT** untuk menjawab panggilan. Lepaskan tombol **PTT** untuk mendengarkan.

2 Tekan untuk mengakhiri panggilan.

Layar menampilkan `Mengakhiri Panggilan Telepon`.
Jika panggilan berhasil diakhiri:

- Nada akan berbunyi.
- Layar menampilkan pesan `Panggilan Diakhiri`.

Jika panggilan tidak berhasil diakhiri, radio kembali ke layar Panggilan Telepon. Ulangi langkah ini atau tunggu hingga pengguna telepon mengakhiri panggilan.

6.10.5.7

Merespons Panggilan Telepon sebagai Semua Panggilan

Saat menerima Panggilan Telepon sebagai Semua Panggilan, Anda dapat merespons atau mengakhiri panggilan, hanya jika jenis Semua Panggilan ditetapkan ke saluran. Ikuti prosedur untuk merespons Panggilan Telepon sebagai Semua Panggilan di radio Anda.

Saat menerima Panggilan Telepon sebagai Semua Panggilan:

- Layar menampilkan ikon **Panggilan Telepon** di sudut kanan atas.
- Layar menampilkan `Semua Panggilan` dan `Panggilan Telepon`.

Jika kemampuan Panggilan Telepon tidak diaktifkan pada radio, baris pertama layar akan menunjukkan `Tidak Tersedia` dan radio Anda membisukan panggilan.

Radio kembali ke layar sebelumnya saat panggilan berakhir.

1 Tekan tombol **PTT** untuk menjawab panggilan.

2 Lepaskan tombol **PTT** untuk mendengarkan.

3 Tekan untuk mengakhiri panggilan.

Layar menampilkan `Mengakhiri Panggilan Telepon`.
Jika panggilan berhasil diakhiri:

- Nada akan berbunyi.
- Layar menampilkan `Semua Panggilan` dan `Panggilan Berakhir`.

Jika panggilan tidak berhasil diakhiri, radio kembali ke layar Panggilan Telepon. Ulangi langkah 3 atau tunggu hingga pengguna telepon mengakhiri panggilan.

6.10.5.8

Merespons Panggilan Telepon sebagai Panggilan Pribadi

Ikuti prosedur untuk merespons Panggilan Telepon sebagai Panggilan Pribadi di radio Anda.

Saat menerima Panggilan Telepon sebagai Panggilan Pribadi:

- Layar menampilkan ikon **Panggilan Telepon** di sudut kanan atas.
- Layar menampilkan alias pemanggil atau `Panggilan Telepon`.

Jika kemampuan Panggilan Telepon tidak diaktifkan pada radio, baris pertama layar akan menunjukkan `Tidak Tersedia` dan radio Anda membisukan panggilan. Radio kembali ke layar sebelumnya saat panggilan berakhir.

1 Tekan tombol **PTT** untuk menjawab panggilan. Lepaskan tombol **PTT** untuk mendengarkan.

2 Tekan untuk mengakhiri panggilan.

Layar menampilkan `Mengakhiri Panggilan Telepon`.
Jika panggilan berhasil diakhiri:

- Nada akan berbunyi.
- Layar menampilkan pesan `Panggilan Diakhiri.`

Jika panggilan tidak berhasil diakhiri, radio kembali ke layar Panggilan Telepon. Ulangi langkah ini atau tunggu hingga pengguna telepon mengakhiri panggilan.

6.10.6

Memulai Interupsi Transmisi

Panggilan yang sedang berlangsung terputus, saat Anda melakukan tindakan berikut:

- Tekan tombol **Voice PTT**.
- Tekan tombol **Darurat**.
- Lakukan transmisi data.
- Tekan tombol **TX Interrupt Remote Dekey** terprogram.

Radio penerima menampilkan `Panggilan Diinterupsi.`

6.10.7

Talkaround

Fitur ini memungkinkan Anda terus berkomunikasi ketika repeater tidak beroperasi, atau ketika radio berada di luar jangkauan dari repeater tetapi dalam jangkauan bicara radio lain.

Pengaturan talkaround disimpan bahkan setelah radio dimatikan.

PEMBERITAHUAN:
Fitur ini tidak berlaku di Capacity Plus–Single-Site, Capacity Plus–Multi-Site, dan saluran Citizens Band yang berada dalam frekuensi yang sama.

6.10.7.1

Beralih Antara Mode Repeater dan Talkaround

Ikuti prosedur untuk beralih antara mode Repeater dan Talkaround di radio Anda.

1 Lakukan salah satu langkah berikut:
   - Tekan tombol **Repeater/Talkaround** yang terprogram. Lompati langkah-langkah berikut ini.

- Tekan OK untuk mengakses menu.

2 Tekan ▲ atau ▼ ke Utilitas. Tekan OK untuk memilih.

3 Tekan ▲ atau ▼ ke Pengaturan Radio.

Tekan OK untuk memilih.

4 Tekan ▲ atau ▼ ke Talkaround. Tekan OK untuk memilih.

Jika diaktifkan, ✓ muncul di sebelah Diaktifkan.

Jika dinonaktifkan, ✓ hilang dari sebelah Diaktifkan.

Layar kembali ke layar sebelumnya secara otomatis.

6.10.8

Panggilan Suara Siaran

Panggilan Suara Siaran adalah panggilan suara satu arah dari pengguna ke seluruh grup bicara.

Fitur Panggilan Suara Siaran memungkinkan hanya pengguna yang memulai panggilan yang melakukan transmisi ke grup bicara, sedangkan penerima panggilan tidak dapat merespons (tanpa Pengatur Waktu Hang Panggilan).

Radio harus diprogram agar Anda bisa menggunakan fitur ini. Tanyakan kepada dealer atau administrator sistem Anda untuk informasi selengkapnya.

6.10.8.1

Melakukan Panggilan Suara Siaran

Program radio Anda untuk melakukan Panggilan Suara Siaran.

1 Pilih saluran dengan ID atau alias grup yang aktif.

2 Tekan tombol **PTT** untuk melakukan panggilan.

LED hijau akan menyala. Layar menampilkan Panggilan Siaran, ikon dan alias **Panggilan Grup.**

3 Lakukan salah satu langkah berikut:

- Tunggu hingga Nada Izin Bicara selesai dan bicaralah dengan jelas ke mikrofon, jika diaktifkan.
- Tunggu hingga Sidetone **PTT** selesai dan bicaralah dengan jelas ke mikrofon, jika diaktifkan.

PEMBERITAHUAN:
Pengguna pada saluran ini tidak bisa menjawab Panggilan Suara Siaran.

Radio kembali ke menu sebelumnya setelah panggilan berakhir.

6.10.8.2

Melakukan Panggilan Suara Siaran Menggunakan Tombol Angka yang Dapat Diprogram

Ikuti prosedur untuk melakukan Panggilan Suara Siaran di radio Anda menggunakan tombol angka yang dapat diprogram.

1 Pada layar **Awal**, tekan lama tombol angka terprogram yang ditetapkan ke alias atau ID yang telah ditentukan.

Jika sebuah tombol angka dialokasikan untuk sebuah entri dalam mode tertentu, fitur ini tidak didukung apabila Anda menekan lama tombol angka dalam mode yang lain.

Jika tombol angka tidak dikaitkan ke suatu entri, akan terdengar bunyi nada indikator negatif.

2 Tekan tombol **PTT** untuk melakukan panggilan.

LED hijau akan menyala.

Lihat Mengalokasikan Entri ke Tombol Angka yang Dapat Diprogram di halaman 442 untuk informasi selengkapnya.

6.10.8.3

Melakukan Panggilan Suara Siaran Menggunakan Pencarian Alias

1 Tekan OK untuk mengakses menu.

2 Tekan ▲ atau ▼ ke Kontak. Tekan OK untuk memilih.

Layar menampilkan entri sesuai urutan abjad.

3 Tekan ▲ atau ▼ ke alias atau ID subscriber yang diinginkan.

Baris pertama layar menampilkan Nomor Telepon:. Baris kedua layar menampilkan kursor yang berkedip.

4 Gunakan keypad untuk memasukkan nomor telepon.

5 Tekan OK untuk memilih. Jika entri yang dipilih kosong, nada indikator negatif akan berbunyi dan layar menampilkan Panggilan Telepon Tidak Valid #

6 Tekan ▲ atau ▼ untuk Panggilan Telepon

dan Tekan OK untuk memilih. Jika kode akses tidak dikonfigurasi sebelumnya dalam daftar Kontak, baris pertama pada layar menampilkan Kode Akses:. Baris kedua layar menampilkan kursor yang berkedip. Masukkan kode akses dan tekan tombol

OK untuk melanjutkan. Jika berhasil, nada DTMF terdengar. Nada panggilan dari pengguna telepon akan terdengar. Baris pertama layar menampilkan alias atau ID subscriber, dan ikon RSSI. Baris kedua layar menampilkan Panggilan Telepon dan ikon Panggilan Telepon. Jika tidak berhasil, nada terdengar dan layar menampilkan Panggilan Telepon Gagal. Radio Anda kembali ke layar input Kode Akses. Jika kode akses telah dikonfigurasi sebelumnya di daftar Kontak, radio akan kembali ke layar tempat Anda berada sebelum memulai panggilan.

7 Tekan tombol **PTT** untuk berbicara dan lepaskan untuk mendengarkan. Ikon RSSI tidak ditampilkan selama transmisi.

8 Untuk memasukkan digit ekstra, jika diminta oleh Panggilan Telepon, lakukan salah satu hal berikut.

- Tekan sembarang tombol keypad untuk mulai memasukkan digit ekstra. Baris pertama layar menampilkan Digit Ekstra:. Baris kedua layar menampilkan kursor yang berkedip. Masukkan

digit ekstra dan tekan tombol OK untuk melanjutkan. Nada DTMF terdengar dan radio kembali ke layar sebelumnya.

- Tekan tombol **Akses Satu Sentuhan**. Nada DTMF akan berbunyi. Jika entri untuk tombol **Akses Satu Sentuhan** kosong, nada indikator negatif akan berbunyi.

9 Tekan untuk mengakhiri panggilan. Jika kode de-akses tidak dikonfigurasi sebelumnya dalam daftar Kontak, baris pertama layar akan menampilkan `Kode De-Akses:`. Baris kedua layar menampilkan kursor yang berkedip. Masukkan kode de-akses dan tekan OK untuk melanjutkan. Radio kembali ke layar sebelumnya. Nada DTMF berbunyi dan layar menampilkan `Mengakhiri Panggilan Telepon`. Jika berhasil, nada terdengar dan layar menampilkan Panggilan Telepon Diakhiri. Radio Anda kembali ke layar Panggilan Telepon. Jika tidak berhasil, radio Anda kembali ke layar Panggilan Telepon. Jika Anda menekan tombol **PTT** saat berada di layar Kontak Telepon, nada akan berbunyi dan layar menampilkan `Tekan OK untuk Melakukan Panggilan`. Jika pengguna telepon mengakhiri panggilan, nada berbunyi dan layar menampilkan `Panggilan Telepon Diakhiri`. Jika panggilan berakhir saat Anda memasukkan digit ekstra yang diminta oleh Panggilan Telepon, radio kembali ke layar yang dibuka sebelum Anda memulai panggilan.

PEMBERITAHUAN:

Selama akses saluran, tekan untuk menghentikan percobaan panggilan dan tombol suara nada untuk keluar dari pencarian alias. Tekan tombol OK atau untuk keluar dari pencarian alias. Selama panggilan, saat Anda menekan tombol Akses Satu Sentuhan dengan kode de-akses yang dikonfigurasi sebelumnya atau memasukkan kode de-akses sebagai input untuk digit ekstra, radio akan mencoba mengakhiri panggilan. Saat mengakses saluran dan melakukan transmisi kode akses/de-akses atau digit ekstra, radio hanya merespons tombol On/Off, Kenop Volume, dan Pemilih Saluran. Nada akan berbunyi untuk tiap input yang tidak valid.

6.10.8.4

Menerima Panggilan Suara Siaran

Apabila Anda menerima Panggilan Suara Siaran:

- Nada akan berbunyi.
- LED akan berkedip hijau.
- Layar menampilkan ikon **Panggilan Grup** di sudut kanan atas.
- Baris teks pertama menampilkan ID alias pemanggil.
- Baris teks kedua menampilkan `Panggilan Siaran`.
- Radio bersuara dan panggilan masuk berbunyi melalui speaker.

Jika panggilan berakhir, radio kembali ke layar sebelumnya.

Sebelum berakhir, Panggilan Suara Siaran tidak menunggu selama waktu yang telah ditentukan sebelumnya.

Anda tidak dapat merespons Panggilan Suara Siaran.

PEMBERITAHUAN:
Radio berhenti menerima Panggilan Suara Siaran tersebut jika Anda beralih ke saluran lain ketika menerima panggilan tersebut. Anda tidak dapat melanjutkan navigasi menu apa pun atau mengedit hingga Panggilan Suara Siaran berakhir.

6.10.9

Panggilan Tidak Dialamatkan

Panggilan Tidak Dialamatkan adalah panggilan grup ke salah satu dari 16 ID grup yang telah ditentukan sebelumnya.

Fitur ini dikonfigurasi menggunakan CPS-RM. Kontak untuk salah satu ID yang telah ditentukan diperlukan untuk memulai dan/atau menerima Panggilan Tidak Dialamatkan. Tanyakan kepada dealer atau administrator sistem Anda untuk informasi selengkapnya.

6.10.9.1

Melakukan Panggilan Tidak Dialamatkan

1. Pilih saluran dengan ID atau alias grup yang aktif.

2 Tekan tombol **PTT** untuk melakukan panggilan.

LED hijau akan menyala.Baris teks menampilkan `Panggilan Tidak Dialamatkan`, ikon **Panggilan Grup** dan alias.

3 Lakukan salah satu langkah berikut:

- Tunggu hingga Nada Izin Bicara selesai dan bicaralah dengan jelas ke mikrofon, jika diaktifkan.
- Tunggu hingga Sidetone **PTT** selesai dan bicaralah dengan jelas ke mikrofon, jika diaktifkan.

4 Lepaskan tombol **PTT** untuk mendengarkan.

LED hijau akan menyala jika radio target merespons. Nada sesaat berbunyi. Layar menampilkan `Panggilan Tidak Dialamatkan`, ikon dan alias atau ID **Panggilan Grup**, serta alias atau ID radio yang melakukan transmisi.

5 Jika fitur Indikasi Saluran Bebas diaktifkan, nada peringatan singkat akan berbunyi saat pengguna radio yang melakukan transmisi melepaskan tombol **PTT**, yang menunjukkan saluran bebas dapat Anda gunakan untuk merespons. Tekan tombol **PTT** untuk menjawab panggilan.

Panggilan berakhir jika tidak ada aktivitas suara selama waktu yang telah ditentukan.

Inisiator panggilan dapat menekan untuk mengakhiri Panggilan Grup.

6.10.9.2

Merespons Panggilan Tidak Dialamatkan

Apabila Anda menerima sebuah Panggilan Tidak Dialamatkan:

- LED akan berkedip hijau.
- Nada sesaat berbunyi.
- Baris teks menampilkan `Panggilan Tidak Dialamatkan`, alias pemanggil, dan alias panggilan grup.
- Radio bersuara dan panggilan masuk berbunyi melalui speaker.

1 Lakukan salah satu langkah berikut:

- Jika fitur Indikasi Saluran Bebas diaktifkan, nada peringatan singkat akan berbunyi saat pengguna radio yang melakukan transmisi melepaskan tombol **PTT**, yang menunjukkan saluran bebas dapat Anda gunakan untuk merespons. Tekan tombol **PTT** untuk menjawab panggilan.
- Jika Interupsi Suara diaktifkan, tekan tombol **PTT** untuk menginterupsi audio dari radio yang melakukan transmisi dan membebaskan saluran sehingga Anda dapat merespons.

LED hijau akan menyala.

2 Lakukan salah satu langkah berikut:

- Tunggu hingga Nada Izin Bicara selesai dan bicaralah dengan jelas ke mikrofon, jika diaktifkan.
- Tunggu hingga Sidetone **PTT** selesai dan bicaralah dengan jelas ke mikrofon, jika diaktifkan.

3 Lepaskan tombol **PTT** untuk mendengarkan.

Panggilan berakhir jika tidak ada aktivitas suara selama waktu yang telah ditentukan.

6.10.10

Mode Saluran Suara Terbuka (OVCM)

Mode Saluran Suara Terbuka (OVCM) memungkinkan radio yang tidak dikonfigurasi sebelumnya untuk bekerja di sistem tertentu untuk menerima dan mengirim transmisi selama panggilan grup atau individu.

Panggilan grup OVCM juga mendukung panggilan siaran. Program radio untuk menggunakan fitur ini. Tanyakan kepada dealer atau administrator sistem Anda untuk informasi selengkapnya.

6.10.10.1

Melakukan Panggilan OVCM

Radio harus diprogram untuk melakukan Semua Panggilan. Ikuti prosedur untuk melakukan Panggilan OVCM di radio Anda.

1 Tekan tombol **PTT** untuk melakukan panggilan.

LED hijau akan menyala.

Baris teks ini menampilkan ikon jenis panggilan, OVCM, dan alias. Menandakan bahwa radio telah memasuki Status OVCM.

2 Lakukan salah satu langkah berikut:

- Tunggu hingga Nada Izin Bicara selesai dan bicaralah dengan jelas ke mikrofon, jika diaktifkan.
- Tunggu hingga Sidetone **PTT** selesai dan bicaralah dengan jelas ke mikrofon, jika diaktifkan.

6.10.10.2

Merespons Panggilan OVCM

Apabila Anda menerima sebuah Panggilan OVCM:

- LED akan berkedip hijau.
- Baris teks menampilkan ikon jenis panggilan, OVCM, dan alias.
- Radio bersuara dan panggilan masuk berbunyi melalui speaker.

1 Lakukan salah satu langkah berikut:

- Jika fitur Indikasi Saluran Bebas diaktifkan, nada peringatan singkat akan berbunyi saat pengguna radio yang melakukan transmisi melepaskan tombol **PTT**, yang menunjukkan saluran bebas dapat Anda gunakan untuk merespons. Tekan tombol **PTT** untuk menjawab panggilan.
- Jika Interupsi Suara diaktifkan, tekan tombol **PTT** untuk menginterupsi audio dari radio yang melakukan transmisi dan membebaskan saluran sehingga Anda dapat merespons.

LED hijau akan menyala.

2 Lakukan salah satu langkah berikut:

- Tunggu hingga Nada Izin Bicara selesai dan bicaralah dengan jelas ke mikrofon, jika diaktifkan.
- Tunggu hingga Sidetone **PTT** selesai dan bicaralah dengan jelas ke mikrofon, jika diaktifkan.

3 Lepaskan tombol **PTT** untuk mendengarkan.

Panggilan berakhir jika tidak ada aktivitas suara selama waktu yang telah ditentukan.

6.11

Fitur Lanjutan

Bab ini menjelaskan pengoperasian fitur-fitur yang terdapat di radio Anda.

Dealer atau administrator sistem mungkin telah mengatur radio sesuai dengan kebutuhan khusus Anda. Tanyakan kepada dealer atau administrator sistem Anda untuk informasi selengkapnya.

6.11.1

Pengingat Saluran Rumah

Fitur ini akan mengingatkan ketika radio tidak diatur ke saluran rumah selama jangka waktu tertentu.

Jika fitur ini diaktifkan melalui CPS, jika radio tidak diatur ke saluran rumah selama jangka waktu tertentu, hal berikut ini terjadi secara berkala:

- Nada Pengingat Saluran Rumah dan suara pengumuman berbunyi.
- Baris pertama layar menampilkan `Non`.
- Baris kedua menunjukkan `Saluran Rumah`.

Anda dapat merespons pengingat dengan melakukan salah satu tindakan berikut:

- Kembali ke saluran rumah.
- Matikan suara pengingat untuk sementara menggunakan tombol yang dapat diprogram.
- Buat saluran rumah baru menggunakan tombol yang dapat diprogram.

6.11.1.1

Mematikan Suara Pengingat Saluran Rumah

Ketika Pengingat Saluran Rumah berbunyi, Anda dapat mematikan suaranya.

Tekan tombol **Senyapkan Pengingat Saluran Rumah** yang diprogram.

Layar menampilkan `HCR Disenyapkan`.

6.11.1.2

Mengatur Saluran Rumah Baru

Jika Pengingat Saluran Rumah terjadi, Anda dapat menetapkan saluran rumah baru.

1 Lakukan salah satu langkah berikut:

- Tekan tombol yang dapat diprogram **Atur Ulang Saluran Rumah** untuk mengatur saluran saat ini sebagai Saluran Rumah yang baru. Lompati langkah-langkah berikut ini.
  Baris pertama layar menampilkan alias saluran dan baris kedua menampilkan `Saluran Rumah Baru`.
- Tekan OK untuk mengakses menu.

2 Tekan atau ke `Utilitas`. Tekan OK untuk memilih.

3 Tekan atau ke `Pengaturan Radio`. Tekan OK untuk memilih.

4 Tekan atau ke `Saluran Rumah`. Tekan OK untuk memilih.

5 Tekan atau ke alias saluran rumah baru yang diinginkan. Tekan OK untuk memilih.
Layar menampilkan ✓ di sebelah alias saluran rumah yang dipilih.

6.11.2

Pemeriksaan Radio

Dengan fitur ini, Anda dapat menentukan jika radio lain sedang aktif di dalam sistem tanpa mengganggu pengguna radio. Tidak ada pemberitahuan suara atau visual yang tampil di radio target. Fitur ini hanya tersedia untuk alias atau ID subscriber. Radio harus diprogram agar Anda bisa menggunakan fitur ini.

6.11.2.1

Mengirim Pemeriksaan Radio

Ikuti prosedur untuk mengirim pemeriksaan radio di radio Anda.

1 Tekan tombol **Pemeriksaan Radio** terprogram.

2 Tekan atau ke alias atau ID yang diinginkan. Tekan OK untuk memilih.

Layar menampilkan pemberitahuan mini transisional, yang menunjukkan permintaan sedang diproses.LED hijau akan menyala.

Tunggu respons.

Jika Anda menekan OK ketika radio menunggu respons, sebuah nada berbunyi, radio mengakhiri semua percobaan ulang, dan keluar dari mode Pemeriksaan Radio.

Jika berhasil:

- Nada indikator positif akan berbunyi.
- Layar menampilkan pemberitahuan mini positif.

Jika tidak berhasil:

- Nada indikator negatif akan berbunyi.
- Layar menampilkan pemberitahuan mini negatif.

Radio kembali ke layar alias atau ID subscriber.

6.11.2.2

Mengirim Pemeriksaan Radio Menggunakan Panggilan Manual

Ikuti prosedur untuk mengirim pemeriksaan radio di radio Anda menggunakan panggilan manual.

1 Tekan OK untuk mengakses menu.

2 Tekan atau ke Kontak. Tekan OK untuk memilih.

3 Tekan atau ke Panggilan Manual. Tekan OK untuk memilih.

4 Tekan atau ke Nomor Radio. Tekan OK untuk memilih.

5 Lakukan salah satu langkah berikut:

- Masukkan alias atau ID subscriber, lalu tekan OK untuk melanjutkan.
- Edit ID yang dipanggil sebelumnya, lalu tekan OK untuk melanjutkan.

6 Tekan ▲ atau ▼ ke `Pemeriksaan Radio`.

Tekan OK untuk memilih.

Layar menampilkan pemberitahuan mini transisional, yang menunjukkan permintaan sedang diproses. LED hijau akan menyala.

7 Tunggu respons.

Jika ↩ ditekan ketika radio menunggu penerimaan, sebuah nada berbunyi, dan radio mengakhiri semua percobaan ulang dan keluar dari mode Pemeriksaan Radio.

Jika berhasil:

- Nada indikator positif akan berbunyi.
- Layar menampilkan pemberitahuan mini positif.

Jika tidak berhasil:

- Nada indikator negatif akan berbunyi.
- Layar menampilkan pemberitahuan mini negatif.

Radio kembali ke layar alias atau ID subscriber.

6.11.3
Monitor Jarak Jauh

Fitur ini digunakan untuk mengaktifkan mikrofon radio target dengan alias atau ID subscriber. Anda dapat menggunakan fitur ini untuk memantau dari jauh aktivitas yang dapat didengar di sekitar radio target.

Ada dua jenis Monitor Jauh:

- Monitor Jauh tanpa Autentikasi
- Monitor Jauh dengan Autentikasi.

Fitur Monitor Jauh dengan Autentikasi dapat dibeli. Di Fitur Monitor Jauh dengan Autentikasi, verifikasi diperlukan saat radio Anda mengaktifkan mikrofon radio target.

Saat radio menerapkan fitur ini ke radio target dengan Autentikasi Pengguna, frasa sandi diperlukan. Frasa sandi sudah diprogram sebelumnya ke dalam radio target melalui CPS.

Radio Anda dan radio target harus diprogram agar Anda bisa menggunakan fitur ini.

Fitur ini otomatis berhenti setelah durasi yang telah diprogram atau bila radio target dioperasikan oleh pengguna.

6.11.3.1

Menginisiasi Monitor Jauh

Ikuti prosedur untuk mengaktifkan Monitor Jauh di radio Anda.

1 Tekan tombol **Monitor Jauh** terprogram.

2 Tekan ▲ atau ▼ ke alias atau ID yang diinginkan.

3 Tekan OK untuk memilih. Salah satu skenario berikut ini akan terjadi:

- Layar menampilkan pemberitahuan mini transisional, yang menunjukkan permintaan sedang diproses. LED hijau akan menyala.
- Akan muncul layar frase sandi.

  Masukkan frase sandi. Tekan OK untuk melanjutkan.

  - Jika frasa sandi benar, layar menampilkan pemberitahuan mini transisional, yang menunjukkan permintaan sedang diproses. LED hijau akan menyala.
  - Jika frase sandi salah, layar menampilkan pemberitahuan mini negatif, dan Anda akan kembali ke layar sebelumnya.

4 Tunggu respons.

Jika berhasil:

- Nada indikator positif akan berbunyi.
- Layar menampilkan pemberitahuan mini positif.
- Audio dari radio yang dimonitor mulai memutar durasi terprogram dan layar menampilkan `Mon. Jauh`. Setelah pencatat waktu berakhir, nada peringatan akan berbunyi dan LED akan mati.

Jika tidak berhasil:

- Nada indikator negatif akan berbunyi.
- Layar menampilkan pemberitahuan mini negatif.

6.11.3.2

Mengaktifkan Monitor Jauh Menggunakan Daftar Kontak

Ikuti prosedur untuk melakukan Monitor Jauh di radio Anda menggunakan daftar Kontak.

1 Tekan OK untuk mengakses menu.

2 Tekan ▲ atau ▼ ke Kontak. Tekan OK untuk memilih.

3 Tekan ▲ atau ▼ ke alias atau ID yang diinginkan. Tekan OK untuk memilih.

4 Tekan ▲ atau ▼ ke Mon. Jauh.

5 Tekan OK untuk memilih. Salah satu skenario berikut ini akan terjadi:

- Layar menampilkan pemberitahuan mini transisional, yang menunjukkan permintaan sedang diproses. LED hijau akan menyala.
- Akan muncul layar frase sandi.

  Masukkan frase sandi. Tekan OK untuk melanjutkan.

  - Jika frasa sandi benar, layar menampilkan pemberitahuan mini transisional, yang menunjukkan permintaan sedang diproses. LED hijau akan menyala.
  - Jika frase sandi salah, layar menampilkan pemberitahuan mini negatif, dan Anda akan kembali ke layar sebelumnya.

6 Tunggu respons.

Jika berhasil:

- Nada indikator positif akan berbunyi.
- Layar menampilkan pemberitahuan mini positif.
- Audio dari radio yang dimonitor mulai memutar durasi terprogram dan layar menampilkan Mon. Monitor. Setelah pencatat waktu berakhir, nada peringatan akan berbunyi dan LED akan mati.

Jika tidak berhasil:

- Nada indikator negatif akan berbunyi.

- Layar menampilkan pemberitahuan mini negatif.

6.11.3.3

Memulai Monitor Jauh Menggunakan Panggilan Manual

Ikuti prosedur untuk melakukan Monitor Jauh di radio Anda menggunakan panggilan manual.

1 Tekan OK untuk mengakses menu.

2 Tekan ▲ atau ▼ ke Kontak. Tekan OK untuk memilih.

3 Tekan ▲ atau ▼ ke Panggilan Manual. Tekan OK untuk memilih.

4 Tekan ▲ atau ▼ ke Nomor Radio. Tekan OK untuk memilih.

5 Lakukan salah satu langkah berikut:

- Masukkan alias atau ID subscriber, lalu tekan OK untuk melanjutkan.
- Edit ID yang dipanggil sebelumnya, lalu tekan OK untuk melanjutkan.

6 Tekan ▲ atau ▼ ke Mon. Jauh.

7 Tekan OK untuk memilih. Salah satu skenario berikut ini akan terjadi:

- Layar menampilkan pemberitahuan mini transisional, yang menunjukkan permintaan sedang diproses. LED hijau akan menyala.
- Akan muncul layar frase sandi.

  Masukkan frase sandi. Tekan OK untuk melanjutkan.

  - Jika frasa sandi benar, layar menampilkan pemberitahuan mini transisional, yang menunjukkan permintaan sedang diproses. LED hijau akan menyala.

- Jika frase sandi salah, layar menampilkan pemberitahuan mini negatif, dan Anda akan kembali ke layar sebelumnya.

8 Tunggu respons.

Jika berhasil:

- Nada indikator positif akan berbunyi.
- Layar menampilkan pemberitahuan mini positif.
- Audio dari radio yang dimonitor mulai memutar durasi terprogram dan layar menampilkan `Mon. Jauh`. Setelah pencatat waktu berakhir, nada peringatan akan berbunyi dan LED akan mati.

Jika tidak berhasil:

- Nada indikator negatif akan berbunyi.
- Layar menampilkan pemberitahuan mini negatif.

6.11.4

Daftar Pindai

Daftar pindai dibuat dan ditetapkan di masing-masing saluran atau grup. Radio memindai aktivitas suara dengan beralih di antara urutan saluran atau grup yang ditentukan dalam daftar pindai untuk mengetahui saluran atau grup yang aktif.

Radio Anda dapat mendukung hingga 250 daftar pindai, dengan maksimal 16 anggota dalam daftar.

Setiap daftar pindai mendukung campuran entri analog dan digital.

Anda bisa menambahkan, menghapus, atau memprioritaskan saluran dengan mengedit daftar pindai.

Anda bisa menambahkan daftar pindai baru ke radio Anda menggunakan Pemrograman Panel Depan. Lihat Konfigurasi Panel Depan di halaman 208 untuk informasi selengkapnya.

Ikon **Prioritas** muncul di kiri alias anggota, jika diatur, untuk menunjukkan apakah anggota ada di daftar saluran Prioritas 1 atau Prioritas 2. Anda tidak bisa memiliki banyak saluran Prioritas 1 atau Prioritas 2 di daftar pindai Anda. Tidak ada ikon **Prioritas** jika prioritas diatur ke **Tidak Ada**.

PEMBERITAHUAN:
Fitur ini tidak tersedia dalam Capacity Plus.

6.11.4.1

Melihat Entri dalam Daftar Pindai

Ikuti prosedur untuk melihat entri dalam daftar Pindai di radio Anda.

1 Tekan OK untuk mengakses menu.

2 Tekan ▲ atau ▼ ke `Pindai`. Tekan OK untuk memilih.

3 Tekan ▲ atau ▼ ke `Daftar Pindai`. Tekan OK untuk memilih.

4 Tekan ▲ atau ▼ untuk melihat setiap anggota dalam daftar.

6.11.4.2

Melihat Entri dalam Daftar Pindai Menggunakan Pencarian Alias

Ikuti prosedur untuk melihat entri baru dalam daftar Pindai di radio Anda menggunakan pencarian alias.

1 Tekan OK untuk mengakses menu.

2 Tekan ▲ atau ▼ ke `Pindai`. Tekan OK untuk memilih.

3 Tekan ▲ atau ▼ ke `Daftar Pindai`. Tekan OK untuk memilih.

4 Masukkan karakter pertama dari alias yang diinginkan.

Layar menampilkan kursor berkedip.

5 Masukkan sisa karakter dari alias yang diperlukan.

Pencarian alias peka terhadap huruf besar-kecil. Jika terdapat dua entri atau lebih dengan nama yang sama, layar akan menampilkan entri pertama yang tercantum dalam daftar.

Baris teks pertama menampilkan karakter yang Anda masukkan. Baris teks berikut ini menampilkan hasil pencarian daftar pendek.

6.11.4.3

Menambahkan Entri Baru ke Daftar Pindai

Ikuti prosedur untuk menambahkan entri baru ke dalam daftar Pindai di radio Anda.

1 Tekan OK untuk mengakses menu.

2 Tekan ▲ atau ▼ ke `Pindai`. Tekan OK untuk memilih.

3 Tekan ▲ atau ▼ ke `Daftar Pindai`. Tekan OK untuk memilih.

4 Tekan ▲ atau ▼ ke `Tambah Anggota`. Tekan OK untuk memilih.

5 Tekan ▲ atau ▼ ke alias atau ID yang diinginkan. Tekan OK untuk memilih.

6 Tekan ▲ atau ▼ ke tingkat prioritas yang diperlukan. Tekan OK untuk memilih.

Layar menampilkan pemberitahuan mini positif lalu, `Tambah Lainnya?`.

7 Lakukan salah satu langkah berikut:

- Tekan ▲ atau ▼ ke `Ya` untuk menambahkan entri lain. Tekan OK untuk memilih. Ulangi langkah 5 dan langkah 6.
- Tekan ▲ atau ▼ ke `Tidak` untuk menyimpan daftar saat ini. Tekan OK untuk memilih.

6.11.4.4

Menambahkan Entri Baru ke Daftar Pindai Menggunakan Pencarian Alias

Ikuti prosedur untuk menambahkan entri baru ke daftar Pindai di radio Anda menggunakan pencarian alias.

1 Tekan OK untuk mengakses menu.

2 Tekan ▲ atau ▼ ke Pindai. Tekan OK untuk memilih.

3 Tekan ▲ atau ▼ ke Daftar Pindai. Tekan OK untuk memilih.

4 Tekan ▲ atau ▼ ke Tambah Anggota. Tekan OK untuk memilih.

5 Masukkan karakter pertama dari alias yang diinginkan.

Layar menampilkan kursor berkedip.

6 Masukkan sisa karakter dari alias yang diperlukan.

Pencarian alias peka terhadap huruf besar-kecil. Jika terdapat dua entri atau lebih dengan nama yang sama, layar akan menampilkan entri pertama yang tercantum dalam daftar.

Baris teks pertama menampilkan karakter yang Anda masukkan. Baris teks berikut ini menampilkan hasil pencarian daftar pendek.

7 Tekan OK untuk memilih.

8 Tekan ▲ atau ▼ ke tingkat prioritas yang diperlukan. Tekan OK untuk memilih.

Layar menampilkan pemberitahuan mini positif lalu, Tambah Lainnya?.

9 Lakukan salah satu langkah berikut:

- Tekan ▲ atau ▼ ke Ya untuk menambahkan entri lain. Tekan OK untuk memilih. Ulangi langkah langkah 5 hingga Langkah langkah 8.

- Tekan atau ke Tidak untuk menyimpan daftar saat ini. Tekan OK untuk memilih.

6.11.4.5

Menghapus Entri dari Daftar Pindai

Ikuti prosedur untuk menghapus entri dari daftar Pindai.

1 Tekan OK untuk mengakses menu.

2 Tekan atau ke Pindai. Tekan OK untuk memilih.

3 Tekan atau ke Daftar Pindai. Tekan OK untuk memilih.

4 Tekan atau ke alias atau ID yang diinginkan. Tekan OK untuk memilih.

5 Tekan atau ke Hapus. Tekan OK untuk memilih.

Layar menampilkan Hapus Entri?.

6 Lakukan salah satu langkah berikut:

- Tekan atau ke Ya untuk menghapus entri. Tekan OK untuk memilih.
  Layar menampilkan pemberitahuan mini positif.
- Tekan atau ke Tidak untuk kembali ke layar sebelumnya. Tekan OK untuk memilih.

7 Ulangi langkah 4 hingga langkah 6 untuk menghapus entri lain.

8 Tekan lama untuk kembali ke layar Awal setelah menghapus alias atau ID yang diinginkan.

6.11.4.6

Menetapkan Prioritas untuk Entri dalam Daftar Pindai

Ikuti prosedur untuk menentukan prioritas bagi entri dalam daftar Pindai di radio Anda.

1 Tekan OK untuk mengakses menu.

2 Tekan ▲ atau ▼ ke `Pindai`. Tekan OK untuk memilih.

3 Tekan ▲ atau ▼ ke `Daftar Pindai`. Tekan OK untuk memilih.

4 Tekan ▲ atau ▼ ke alias atau ID yang diinginkan. Tekan OK untuk memilih.

5 Tekan ▲ atau ▼ ke `Edit Prioritas`. Tekan OK untuk memilih.

6 Tekan ▲ atau ▼ ke tingkat prioritas yang diperlukan. Tekan OK untuk memilih.

Layar menampilkan pemberitahuan mini positif sebelum kembali ke layar sebelumnya. Ikon **Prioritas** muncul di sebelah kiri alias anggota.

6.11.5

Pemindaian

Radio akan menggulir daftar penelusuran yang telah diprogram pada saluran aktif untuk mencari aktivitas suara ketika Anda menjalankan pemindaian.

PEMBERITAHUAN:
Fitur ini tidak tersedia dalam Capacity Plus.

Selama pemindaian mode ganda, jika Anda berada pada saluran digital, dan radio menangkap saluran analog, radio secara otomatis beralih dari mode digital ke mode analog selama durasi panggilan. Demikian juga sebaliknya.

Ada dua cara memulai pemindaian:

Pemindaian Saluran Utama (Manual)

Radio memindai semua saluran atau grup dalam daftar penelusuran. Setelah mulai memindai, bergantung pada

pengaturannya, radio mungkin secara otomatis memulai pada saluran/grup aktif yang dipindai terakhir kali atau pada saluran tempat pemindaian dimulai.

Pemindaian Otomatis

Radio secara otomatis mulai memindai jika Anda memilih saluran atau grup dengan Pemindaian Otomatis diaktifkan.

PEMBERITAHUAN:
Saat Anda mengonfigurasi **Terima Pesan Grup dalam Pindaian**, radio Anda dapat menerima pesan grup dari saluran non-rumah. Radio Anda dapat membalas pesan grup di saluran rumah tetapi tidak dapat membalas di saluran non-rumah. Tanyakan kepada penyalur atau administrator sistem Anda untuk informasi lebih lanjut.

6.11.5.1

Mengaktifkan atau Menonaktifkan Pemindaian

Ikuti prosedur untuk mengaktifkan atau menonaktifkan pemindaian di radio Anda.

1. Tekan OK untuk mengakses menu.
2. Tekan ▲ atau ▼ ke `Pindai`. Tekan OK untuk memilih.
3. Tekan ▲ atau ▼ ke `Status Pemindaian`. Tekan OK untuk memilih.
4. Tekan ▲ atau ▼ ke status pemindaian yang diperlukan dan tekan OK untuk memilih.

Jika pemindaian diaktifkan:

- Layar menampilkan ikon `Pemindaian Aktif` dan **Pindai**.
- LED kuning akan berkedip.

Jika pemindaian dinonaktifkan:

- Layar akan menampilkan `Pemindaian Nonaktif`.
- Ikon **Pindai** tidak muncul.
- LED mati.

6.11.5.2

Merespons Transmisi Selama Pemindaian

Selama pemindaian, radio berhenti pada saluran/grup tempat aktivitas terdeteksi. Radio tetap berada di saluran tersebut selama durasi terprogram, yang disebut waktu hang. Ikuti prosedur untuk merespons transmisi selama pemindaian.

1 Jika fitur Indikasi Saluran Bebas diaktifkan, nada peringatan singkat akan berbunyi saat pengguna radio yang melakukan transmisi melepaskan tombol **PTT**, yang menunjukkan saluran bebas dapat Anda gunakan untuk merespons. Tekan tombol **PTT** selama waktu hang.

   LED hijau akan menyala.

2 Lepaskan tombol **PTT** untuk mendengarkan.

   Radio kembali memindai saluran atau grup lain jika Anda tidak merespons selama waktu hang.

6.11.5.3

Menghapus Saluran Gangguan

Jika saluran terus menghasilkan kebisingan atau panggilan yang tidak diinginkan (disebut dengan saluran "gangguan"), Anda dapat menghapus saluran yang tidak diinginkan tersebut untuk sementara dari daftar penelusuran. Kemampuan ini tidak berlaku bagi saluran yang ditetapkan sebagai Saluran Terpilih. Ikuti prosedur untuk menghapus saluran gangguan di radio Anda.

1 Bila radio menangkap saluran yang tidak dikehendaki atau saluran gangguan, tekan tombol terprogram **Hapus Saluran Gangguan** sampai Anda mendengar sebuah nada.

2 Lepaskan tombol **Hapus Saluran Gangguan** terprogram.

   Saluran gangguan dihapus.

6.11.5.4

Memulihkan Saluran Gangguan

Ikuti prosedur untuk memulihkan saluran gangguan di radio Anda.

Lakukan salah satu langkah berikut:

- Matikan radio, lalu hidupkan kembali.
- Hentikan dan mulai lagi pemindaian menggunakan menu atau tombol **Pindai** terprogram.
- Ganti saluran menggunakan tombol **Saluran Naik/Turun**.

6.11.6

Vote Scan

Vote Scan menyediakan jangkauan area yang luas bagi Anda dalam area di mana terdapat beberapa stasiun pangkalan yang mentransmisikan informasi yang identik pada saluran analog berlainan.

Radio memindai saluran-saluran analog dari beberapa stasiun pangkalan dan melakukan proses voting untuk memilih sinyal yang paling kuat diterima. Setelah sinyal itu ditetapkan, radio Anda menerima transmisi dari stasiun pangkalan tersebut.

Selama vote scan, LED kuning berkedip dan layar menampilkan ikon **Vote Scan**.

Untuk merespon transmisi selama vote scan, lihat Merespons Transmisi Selama Pemindaian di halaman 438 .

6.11.7

Pengaturan Kontak

Kontak mempunyai kemampuan seperti buku telepon di radio Anda. Setiap entri berhubungan dengan suatu alias atau ID yang Anda gunakan untuk memulai panggilan. Entri diurutkan berdasar abjad.

Bergantung konteksnya, tiap entri terkait dengan jenis panggilan yang berbeda: Panggilan Grup, Panggilan Pribadi, Semua Panggilan, Panggilan PC, atau Panggilan Dispatch.

Panggilan PC dan Panggilan Dispatch terkait dengan data. Ini hanya tersedia dengan aplikasi. Untuk detail selengkapnya, lihat dokumentasi aplikasi data.

Selain itu, melalui menu Kontak, Anda dapat menetapkan tiap entri ke satu atau beberapa tombol angka yang dapat diprogram pada mikrofon keypad. Jika ada entri

yang ditentukan ke tombol angka, radio dapat melakukan sambungan cepat pada entri itu.

PEMBERITAHUAN:
Tanda centang akan ditampilkan di depan setiap tombol angka yang ditetapkan ke entri tertentu. Jika tanda centang muncul di depan `Kosong`, berarti Anda belum menetapkan tombol angka ke entri apa pun.

Masing-masing entri dalam Kontak menampilkan informasi berikut ini:

- Jenis Panggilan
- Alias Panggilan
- ID Panggilan

PEMBERITAHUAN:
Jika fitur Privasi telah diaktifkan di suatu saluran, Anda bisa melakukan Panggilan Grup dengan privasi aktif, Panggilan Pribadi, dan Semua Panggilan di saluran itu. Hanya radio target dengan Kunci Privasi yang sama, atau Nilai Kunci dan ID Kunci yang sama dengan radio Anda yang bisa mendekripsi transmisi tersebut.

6.11.7.1

Melakukan Panggilan Grup Menggunakan Daftar Kontak

Ikuti prosedur untuk melakukan Panggilan Grup di radio Anda menggunakan daftar Kontak.

1. Tekan OK untuk mengakses menu.
2. Tekan ▲ atau ▼ ke `Kontak`.Tekan OK untuk memilih.
3. Tekan ▲ atau ▼ ke alias atau ID yang diinginkan.Tekan OK untuk memilih.
4. Tekan tombol **PTT** untuk melakukan panggilan.

   LED hijau akan menyala.
5. Lepaskan tombol **PTT** untuk mendengarkan.

   LED hijau berkedip ketika ada pengguna dalam grup yang merespons. Layar menampilkan ikon dan alias atau ID **Panggilan Grup**, serta alias atau ID radio yang melakukan transmisi.

6 Jika fitur Indikasi Saluran Bebas diaktifkan, nada peringatan singkat akan berbunyi saat pengguna radio yang melakukan transmisi melepaskan tombol **PTT**, yang menunjukkan saluran bebas dapat Anda gunakan untuk merespons.Tekan tombol **PTT** untuk menjawab panggilan.

Panggilan berakhir jika tidak ada aktivitas suara selama waktu yang telah ditentukan.

6.11.7.2

Melakukan Panggilan Pribadi Menggunakan Daftar Kontak

1 Tekan OK untuk mengakses menu.

2 Tekan ▲ atau ▼ ke `Kontak`. Tekan OK untuk memilih.

3 Tekan ▲ atau ▼ ke alias atau ID yang diinginkan. Tekan OK untuk memilih.

4 Tekan tombol **PTT** untuk melakukan panggilan.

LED hijau akan menyala. Layar menampilkan alias tujuan.

5 Tunggu hingga Nada Izin Bicara selesai dan bicaralah dengan jelas ke mikrofon, jika diaktifkan.

6 Lepaskan tombol **PTT** untuk mendengarkan.

LED hijau akan berkedip jika radio target merespons. Layar akan menampilkan alias atau ID pengguna yang melakukan transmisi.

7 Jika fitur Indikasi Saluran Bebas diaktifkan, nada peringatan singkat akan berbunyi saat pengguna radio yang melakukan transmisi melepaskan tombol **PTT**, yang menunjukkan saluran bebas dapat Anda gunakan untuk merespons. Tekan tombol **PTT** untuk menjawab panggilan.

Panggilan berakhir jika tidak ada aktivitas suara selama waktu yang telah ditentukan. Nada akan berbunyi. Layar menampilkan pesan `Panggilan Diakhiri`.

6.11.7.3

Mengalokasikan Entri ke Tombol Angka yang Dapat Diprogram

1 Tekan OK untuk mengakses menu.

2 Tekan atau ke Kontak. Tekan OK untuk memilih.

3 Tekan atau ke alias atau ID yang diinginkan. Tekan OK untuk memilih.

4 Tekan atau ke Tombol Program. Tekan OK untuk memilih.

5 Lakukan salah satu langkah berikut:

- Jika tombol angka yang diinginkan belum dialokasikan untuk sebuah entri, tekan atau ke tombol angka yang diinginkan. Tekan OK untuk memilih.
- Jika tombol angka yang diinginkan sudah dialokasikan untuk sebuah entri, layar menampilkan Tombol Sudah Dialokasikan dan baris teks pertama menampilkan Timpa?. Lakukan salah satu langkah berikut:

  Tekan atau ke Ya. Tekan OK untuk memilih.

  Radio membunyikan nada indikator positif dan layar menampilkan Kontak Disimpan serta pemberitahuan mini positif.

  Tekan atau ke Tidak untuk kembali ke langkah sebelumnya.

Setiap entri dapat dikaitkan ke berbagai tombol angka. Anda melihat ✓ sebelum tiap tombol angka yang dialokasikan pada entri. Jika ✓ terdapat sebelum Kosong, maka tombol angka tidak ditetapkan.
Jika sebuah tombol angka dialokasikan untuk sebuah entri dalam mode tertentu, fitur ini tidak didukung apabila Anda menekan lama tombol angka dalam mode yang lain.

Layar kembali ke menu sebelumnya secara otomatis.

6.11.7.4

Menghapus Kaitan Antara Entri dan Tombol Angka yang Dapat Diprogram

1 Lakukan salah satu langkah berikut:

- Tekan lama tombol angka terprogram ke alias atau ID yang diinginkan. Lanjutkan ke langkah 4.
- Tekan OK untuk mengakses menu.

2 Tekan atau ke Kontak. Tekan OK untuk memilih.

3 Tekan atau ke alias atau ID yang diinginkan. Tekan OK untuk memilih.

4 Tekan atau ke Tombol Program. Tekan OK untuk memilih.

5 Tekan atau ke Kosongkan. Tekan OK untuk memilih.

Baris teks pertama menampilkan Hapus dari semua tombol.

6 Tekan atau ke Ya. Tekan OK untuk memilih.

PEMBERITAHUAN:
Bila salah satu entri dihapus, kaitan antara entri tersebut dan tombol angka terprogram juga akan dihapus.

Nada indikator positif akan berbunyi. Layar akan menampilkan Kontak Disimpan.
Layar kembali ke menu sebelumnya secara otomatis.

6.11.7.5

Menambahkan Kontak Baru

Ikuti prosedur untuk menambahkan kontak baru di radio Anda.

1 Tekan OK untuk mengakses menu.

2 Tekan atau ke Kontak.Tekan OK untuk memilih.

3 Tekan atau ke Kontak Baru. Tekan OK untuk memilih.

4 Tekan atau untuk memilih jenis kontak Kontak Radio atau Kontak Telepon. Tekan OK untuk memilih.

5 Masukkan nomor kontak dengan keypad, lalu tekan OK untuk melanjutkan.

6 Masukkan nama kontak dengan keypad, lalu tekan OK untuk melanjutkan.

7 Tekan atau ke jenis dering yang diinginkan. Tekan OK untuk memilih.

Nada indikator positif akan berbunyi.Layar menampilkan pemberitahuan mini positif.

6.11.7.6

Mengatur Kontak Default

Ikuti prosedur untuk menentukan kontak default di radio Anda.

1 Tekan OK untuk mengakses menu.

2 Tekan atau ke Kontak. Tekan OK untuk memilih.

3 Tekan atau ke alias atau ID yang diinginkan.Tekan OK untuk memilih.

4 Tekan ▲ atau ▼ ke `Tetapkan sebagai Default`. Tekan OK untuk memilih.

Nada indikator positif akan berbunyi.Layar menampilkan pemberitahuan mini positif. Layar menampilkan ✓ di sebelah alias atau ID yang dipilih.

6.11.8

Pengaturan Indikator Panggilan

Fitur ini memungkinkan Anda untuk mengonfigurasi nada dering panggilan atau pesan teks.

6.11.8.1

Mengaktifkan atau Menonaktifkan Dering Panggilan untuk Peringatan Panggilan

1 Tekan OK untuk mengakses menu.

2 Tekan ▲ atau ▼ ke `Utilitas`. Tekan OK untuk memilih.

3 Tekan ▲ atau ▼ ke `Pengaturan Radio`. Tekan OK untuk memilih.

4 Tekan ▲ atau ▼ ke `Nada/Peringatan`. Tekan OK untuk memilih.

5 Tekan ▲ atau ▼ ke `Dering Panggilan`. Tekan OK untuk memilih.

6 Tekan ▲ atau ▼ ke `Peringatan Panggilan`. Tekan OK untuk memilih.

7 Tekan ▲ atau ▼ ke nada yang diinginkan. Tekan OK untuk memilih. Layar menampilkan ✓ di sebelah nada yang dipilih.

6.11.8.2

Mengaktifkan atau Menonaktifkan Dering Panggilan untuk Panggilan Pribadi

Ikuti prosedur untuk mengaktifkan atau menonaktifkan dering panggilan untuk Panggilan Pribadi di radio Anda.

1 Tekan OK untuk mengakses menu.

2 Tekan atau ke Utilitas.Tekan OK untuk memilih.

3 Tekan atau ke Pengaturan Radio.Tekan OK untuk memilih.

4 Tekan atau ke Nada/Peringatan.

Tekan OK untuk memilih.

5 Tekan atau ke Dering Panggilan.

Tekan OK untuk memilih.

6 Tekan atau ke Panggilan Pribadi.

Tekan OK untuk memilih.

Layar menampilkan ✓ di sebelah Aktif jika nada dering Panggilan Pribadi diaktifkan.

Layar menampilkan ✓ di sebelah Nonaktif jika nada dering Panggilan Pribadi dinonaktifkan.

7 Tekan atau ke nada yang diinginkan.

Tekan OK untuk memilih.

Jika diaktifkan, ✓ muncul di sebelah Diaktifkan.Jika dinonaktifkan, ✓ hilang dari sebelah Diaktifkan.

6.11.8.3

Mengaktifkan atau Menonaktifkan Dering Panggilan untuk Panggilan Selektif

Ikuti prosedur untuk mengaktifkan atau menonaktifkan dering panggilan untuk Panggilan Selektif di radio Anda.

1 Tekan OK untuk mengakses menu.

2 Tekan ▲ atau ▼ ke Utilitas.Tekan OK untuk memilih.

3 Tekan ▲ atau ▼ ke Pengaturan Radio.Tekan OK untuk memilih.

4 Tekan ▲ atau ▼ ke Nada/Peringatan.
Tekan OK untuk memilih.

5 Tekan ▲ atau ▼ ke Dering Panggilan.
Tekan OK untuk memilih.

6 Tekan ▲ atau ▼ ke Panggilan Selektif.
Tekan OK untuk memilih.
Layar menampilkan ✓ dan nada saat ini.

7 Tekan ▲ atau ▼ ke nada yang diinginkan.
Tekan OK untuk memilih. Layar menampilkan ✓ di sebelah nada yang dipilih.

6.11.8.4

Mengaktifkan atau Menonaktifkan Dering Panggilan untuk Pesan Teks

Ikuti prosedur untuk mengaktifkan atau menonaktifkan dering panggilan pesan teks di radio Anda.

1 Tekan OK untuk mengakses menu.

2 Tekan ▲ atau ▼ ke Utilitas. Tekan OK untuk memilih.

3 Tekan ▲ atau ▼ ke Pengaturan Radio.
Tekan OK untuk memilih.

4 Tekan ▲ atau ▼ ke Nada/Peringatan.

Tekan OK untuk memilih.

5 Tekan ▲ atau ▼ ke Dering Panggilan.

Tekan OK untuk memilih.

6 Tekan ▲ atau ▼ ke Pesan Teks. Tekan OK untuk memilih.

Layar menampilkan ✓ dan nada saat ini.

7 Tekan ▲ atau ▼ ke nada yang diinginkan.

Tekan OK untuk memilih.

Layar menampilkan ✓ di sebelah nada yang baru dipilih.

6.11.8.5

Mengaktifkan atau Menonaktifkan Dering Panggilan untuk Status Telemetri dengan Teks

Ikuti prosedur untuk mengaktifkan atau menonaktifkan dering panggilan untuk status telemetri dengan teks di radio Anda.

1 Tekan OK untuk mengakses menu.

2 Tekan ▲ atau ▼ ke Utilitas. Tekan OK untuk memilih.

3 Tekan ▲ atau ▼ ke Pengaturan Radio.

Tekan OK untuk memilih.

4 Tekan ▲ atau ▼ ke Nada/Peringatan.

Tekan OK untuk memilih.

5 Tekan ▲ atau ▼ ke Dering Panggilan.

Tekan OK untuk memilih.

6 Tekan ▲ atau ▼ ke Telemetri. Tekan OK untuk memilih.

Zona saat ini akan ditandai dengan ✓.

6.11.8.6

Menetapkan Gaya Dering

Radio bisa diprogram agar membunyikan salah satu dari sebelas nada dering ketika menerima Panggilan Pribadi, Peringatan Panggilan, atau Pesan Teks dari kontak tertentu.Radio membunyikan setiap gaya dering ketika Anda menelusuri daftar ini.

1 Tekan OK untuk mengakses menu.

2 Tekan ▲ atau ▼ ke Kontak. Tekan OK untuk memilih.

Entri diurutkan berdasar abjad.

3 Tekan ▲ atau ▼ ke alias atau ID yang diinginkan. Tekan OK untuk memilih.

4 Tekan ▲ atau ▼ ke Lihat/Edit. Tekan OK untuk memilih.

5 Tekan OK hingga layar menampilkan menu Pendering

Tanda ✓ menunjukkan nada yang dipilih saat ini.

6 Tekan ▲ atau ▼ ke nada yang diinginkan.

Tekan OK untuk memilih.

✓ muncul di samping nada yang dipilih.

6.11.8.7

Volume Nada Alarm yang Semakin Tinggi

Radio dapat diprogram untuk terus memberitahukan bila terdapat panggilan radio yang tidak terjawab. Hal ini dilakukan dengan otomatis meningkatkan volume nada alarm secara berkala. Fitur ini disebut Escalert.

6.11.9

Fitur Log Panggilan

Radio Anda terus mencatat semua Panggilan Pribadi keluar, yang dijawab, dan yang tidak terjawab. Fitur log panggilan digunakan untuk melihat dan mengelola panggilan terbaru.

Peringatan Panggilan Tak Terjawab dapat disertakan dapat log panggilan, tergantung konfigurasi sistem di radio Anda. Anda dapat melakukan tugas berikut ini di masing-masing daftar panggilan Anda:

- Menyimpan Alias atau ID ke Kontak
- Menghapus Panggilan
- Menghapus Semua Panggilan
- Melihat Detail

6.11.9.1

Melihat Panggilan Terbaru

1 Tekan OK untuk mengakses menu.

2 Tekan ▲ atau ▼ ke `Log Panggilan`. Tekan OK untuk memilih.

3 Tekan ▲ atau ▼ ke daftar yang diinginkan. Opsi yang tersedia adalah daftar `Tak Terjawab`, `Terjawab`, dan `Keluar`.

Tekan OK untuk memilih.

Layar akan menampilkan entri paling kini.

4 Tekan ▲ atau ▼ untuk melihat daftar.

Anda dapat memulai panggilan dengan alias atau ID yang sedang ditampilkan layar dengan menekan tombol **PTT** .

6.11.9.2

Menghapus Panggilan dari Daftar Panggilan

Ikuti prosedur untuk menghapus panggilan dari daftar Panggilan.

1 Tekan OK untuk mengakses menu.

2 Tekan atau ke Log Panggilan. Tekan OK untuk memilih.

3 Tekan atau ke daftar yang diinginkan.
Tekan OK untuk memilih.
Jika daftar kosong:
- Nada akan berbunyi.
- Layar menampilkan Daftar Kosong.

4 Tekan atau ke alias atau ID yang diinginkan.Tekan OK untuk memilih.

5 Tekan atau ke Hapus Entri?. Tekan OK untuk memilih.

6 Lakukan salah satu langkah berikut:
- Tekan OK untuk memilih Ya untuk menghapus entri.
  Layar menampilkan Entri Dihapus.
- Tekan atau ke Tidak. Tekan OK untuk memilih.

Radio kembali ke layar sebelumnya.

6.11.9.3

Menampilkan Detail Daftar Panggilan

Ikuti prosedur untuk melihat detail panggilan di radio.

1 Tekan OK untuk mengakses menu.

2 Tekan atau ke Log Panggilan. Tekan OK untuk memilih.

3 Tekan atau ke daftar yang diinginkan.
Tekan OK untuk memilih.

4 Tekan ▲ atau ▼ ke alias atau ID yang diinginkan. Tekan OK untuk memilih.

5 Tekan ▲ atau ▼ ke `Lihat Detail`. Tekan OK untuk memilih.

Layar menampilkan detail panggilan.

6.11.9.4

Menyimpan Alias atau ID dari Daftar Panggilan

Ikuti prosedur untuk menyimpan alias atau ID di radio Anda dari Daftar Panggilan.

1 Tekan OK untuk mengakses menu.

2 Tekan ▲ atau ▼ ke `Log Panggilan`. Tekan OK untuk memilih.

3 Tekan ▲ atau ▼ ke daftar yang diinginkan. Tekan OK untuk memilih.

4 Tekan ▲ atau ▼ ke alias atau ID yang diinginkan. Tekan OK untuk memilih.

5 Tekan ▲ atau ▼ ke `Simpan`. Tekan OK untuk memilih.

Layar menampilkan kursor berkedip.

6 Masukkan sisa karakter dari alias yang diperlukan. Tekan OK untuk memilih.

Anda dapat menyimpan ID tanpa alias.

Layar menampilkan pemberitahuan mini positif.

6.11.10

Operasi Peringatan Panggilan

Paging Peringatan Panggilan memungkinkan Anda mengingatkan seorang pengguna radio tertentu untuk menghubungi Anda kembali.

Fitur ini hanya tersedia untuk alias atau ID subscriber dan dapat diakses melalui menu menggunakan Kontak, panggilan manual, atau tombol terprogram **Akses Satu Sentuhan**.

6.11.10.1

Melakukan Peringatan Panggilan

Ikuti prosedur untuk melakukan Peringatan Panggilan di radio Anda.

1 Tekan tombol **Akses Satu Sentuhan** terprogram.

Layar menampilkan `Peringatan Panggilan` dan alias atau ID subscriber. LED hijau akan menyala.

2 Tunggu respons.

Jika respons Peringatan Panggilan diterima, layar akan menampilkan pemberitahuan mini positif.

Jika respons Peringatan Panggilan tidak diterima, layar akan menampilkan pemberitahuan mini negatif.

6.11.10.2

Membuat Peringatan Panggilan Menggunakan Daftar Kontak

1 Tekan OK untuk mengakses menu.

2 Tekan ▲ atau ▼ ke `Kontak`. Tekan OK untuk memilih.

3 Tekan ▲ atau ▼ ke alias atau ID yang diinginkan. Tekan OK untuk memilih.

4 Tekan ▲ atau ▼ ke `Peringatan Panggilan`. Tekan OK untuk memilih.

Layar menampilkan `Peringatan Panggilan` dan alias atau ID subscriber. LED hijau akan menyala.

5 Tunggu respons.

- Jika respons diterima, layar akan menampilkan pemberitahuan mini positif.
- Jika respons tidak diterima, layar akan menampilkan pemberitahuan mini negatif.

6.11.10.3

Membuat Peringatan Panggilan Menggunakan Panggilan Manual

Ikuti prosedur untuk melakukan Peringatan Panggilan di radio Anda menggunakan panggilan manual.

1 Tekan OK untuk mengakses menu.

2 Tekan ▲ atau ▼ ke `Kontak`. Tekan OK untuk memilih.

3 Tekan ▲ atau ▼ ke `Panggilan Manual`.

Tekan OK untuk memilih.

Layar menampilkan kursor berkedip.

4 Masukkan ID subscriber dan tekan OK untuk melanjutkan.

5 Tekan ▲ atau ▼ ke `Peringatan Panggilan`.

Tekan OK untuk memilih.

Layar menampilkan `Peringatan Panggilan` dan alias atau ID subscriber. LED hijau akan menyala.

6 Tunggu respons.

- Jika respons Peringatan Panggilan diterima, layar akan menampilkan pemberitahuan mini positif.
- Jika respons Peringatan Panggilan tidak diterima, layar akan menampilkan pemberitahuan mini negatif.

6.11.10.4

Merespons Peringatan Panggilan

Ketika Anda menerima Peringatan Panggilan:

- Nada berulang akan berbunyi.
- LED kuning akan berkedip.
- Layar menampilkan daftar notifikasi yang berisi Peringatan Panggilan dengan alias atau ID radio pemanggil.

Bergantung pada konfigurasi oleh dealer atau administrator sistem, Anda dapat merespons Peringatan Panggilan dengan melakukan salah satu hal berikut:

- Tekan tombol **PTT** dan respons dengan Panggilan Pribadi secara langsung ke pemanggil.
- Tekan tombol **PTT** untuk melanjutkan komunikasi grup bicara normal.
  Peringatan Panggilan dipindahkan ke opsi Panggilan Tak Terjawab di menu Log. Anda dapat merespons pemanggil dari log Panggilan Tak Terjawab.

Lihat Daftar Notifikasi di halaman 205 dan Fitur Log Panggilan di halaman 140 untuk informasi selengkapnya.

6.11.11

Alias Pemanggil Dinamis

Fitur ini memungkinkan Anda untuk mengedit Alias Pemanggil secara dinamis dari panel depan radio Anda.

PEMBERITAHUAN:
Mikrofon keypad diperlukan untuk menjalankan fitur ini.

Saat melakukan panggilan, radio penerima menampilkan Alias Pemanggil radio yang melakukan transmisi.

Daftar Alias Pemanggil bisa menyimpan hingga 500 Alias Pemanggil dari radio yang melakukan transmisi. Anda bisa menampilkan atau melakukan Panggilan Pribadi dari daftar Alias Pemanggil. Ketika Anda mematikan radio, riwayat Alias Pemanggil yang menerima dihapus dari daftar Alias Pemanggil.

6.11.11.1

Menampilkan Daftar Alias Pemanggil

Anda bisa mengakses daftar Alias Pemanggil untuk melihat detail Alias Pemanggil yang melakukan transmisi.

1 Tekan OK untuk mengakses menu.

2 Tekan ▲ atau ▼ ke `Alias Pemanggil`. Tekan OK untuk memilih.

3 Tekan ▲ atau ▼ ke daftar yang diinginkan. Tekan OK untuk memilih.

4 Tekan ▲ atau ▼ ke `Lihat Detail`. Tekan OK untuk memilih.

6.11.11.2

Memulai Panggilan Pribadi dari Daftar Alias Pemanggil

Anda bisa mengakses daftar Alias Pemanggil untuk memulai Panggilan Pribadi.

1 Tekan OK untuk mengakses menu.

2 Tekan ▲ atau ▼ ke `Alias Pemanggil`. Tekan OK untuk memilih.

3 Tekan ▲ atau ▼ ke ***<Alias Pemanggil yang diinginkan>***.

4 Untuk memanggil, tekan dan tahan tombol **PTT**.

6.11.12

Mode Bisu

Mode Bisu memungkinkan untuk membisukan semua indikator audio di radio Anda.

Setelah Mode Bisu aktif, semua indikator audio dibisukan, kecuali fitur dengan prioritas lebih tinggi misalnya operasi darurat.

Setelah keluar dari Mode Bisu, radio Anda melanjutkan pemutaran nada dan transmisi audio.

PENTING:
Pengguna hanya dapat mengaktifkan Face Down atau Man Down pada satu waktu. Kedua fitur tidak dapat diaktifkan secara bersamaan.

6.11.12.1

Mengaktifkan Mode Bisu

Ikuti prosedur untuk menonaktifkan Mode Bisu.

Akses fitur ini menggunakan tombol **Mode Bisu** terprogram.

Hal berikut mungkin terjadi saat Mode bisu aktif:

- Nada Indikator Positif Akan Berbunyi.
- Layar menampilkan `Mode Bisu Aktif`.
- Lampu LED berwarna merah akan terus berkedip hingga Anda keluar dari Mode Bisu.
- Layar menampilkan ikon **Mode Bisu** di layar utama.
- Radio dibisukan.
- Pewaktu Mode Bisu mulai menghitung mundur dengan durasi yang dikonfigurasikan.

6.11.12.2

Menyetel Pewaktu Mode Bisu

Fitur Mode Bisu dapat diaktifkan dalam waktu yang telah dikonfigurasikan terlebih dahulu dengan menyetel Pewaktu Mode Bisu. Durasi pewaktu dikonfigurasikan di menu radio dengan rentang antara 0,5–6 jam. Anda akan dikeluarkan dari Mode Bisu setelah pewaktu kedaluwarsa.

Jika pewaktu habis pada angka 0, radio tetap berada dalam Mode bisu selama waktu yang tidak ditentukan hingga tombol **Mode Bisu** terprogram ditekan.

1. Tekan OK untuk mengakses menu.
2. Tekan ▲ atau ▼ ke `Utilitas`. Tekan OK untuk memilih.
3. Tekan ▲ atau ▼ ke `Pengaturan Radio`. Tekan OK untuk memilih.
4. Tekan ▲ atau ▼ ke `Pewaktu Mode Bisu`. Tekan OK untuk memilih.
5. Tekan ▲ atau ▼ untuk mengedit nilai angka setiap digit, lalu tekan OK.

6.11.12.3

Keluar dari Mode Bisu

Fitur ini dapat dikeluarkan secara otomatis setelah Pewaktu Mode Bisu kedaluwarsa.

Lakukan salah satu hal berikut untuk keluar dari Mode bisu secara manual:

- Tekan tombol **Mode Bisu** terprogram.
- Tekan tombol **PTT** pada entri apa pun.

Hal berikut akan terjadi saat Mode bisu nonaktif:

- Nada Indikator Negatif Akan Berbunyi.
- Layar menampilkan `Mode Bisu Nonaktif`.
- Lampu LED berwarna merah mati.
- Ikon **Mode Bisu** hilang dari layar utama.
- Radio menghidupkan suara dan status speaker dipulihkan.
- Jika pewaktu belum kedaluwarsa, Pewaktu mode bisu dihentikan.

PEMBERITAHUAN:
Pengguna juga dikeluarkan dari Mode Bisu jika mengirimkan suara atau beralih ke saluran yang belum terprogram.

6.11.13

Pengoperasian Darurat

Alarm Darurat digunakan untuk menunjukkan situasi genting. Anda dapat menginisiasi keadaan Darurat setiap saat, walaupun terdapat aktivitas pada saluran aktif.

Dealer Anda bisa mengatur durasi penekanan tombol untuk tombol **Darurat** yang terprogram, kecuali untuk penekanan lama, yang sama dengan semua tombol lainnya:

Tekan Sebentar
Durasi antara 0,05 hingga 0,75 detik.

Tekan Lama
Durasi antara 1,00 hingga 3,75 detik.

Tombol **Darurat** ditetapkan ke fitur Darurat Aktif/Tidak Aktif. Tanyakan kepada dealer tentang pengoperasian yang ditetapkan dari tombol **Darurat**.

PEMBERITAHUAN:
Jika tekan singkat tombol **Darurat** menginisiasi mode Darurat, maka tekan lama ke tombol yang sama memungkinkan radio keluar dari mode Darurat.

Jika tekan lama tombol **Darurat** menginisiasi mode Darurat, maka tekan singkat ke tombol yang sama memungkinkan radio keluar dari mode Darurat.

Radio Anda mendukung tiga Alarm Darurat:

- Alarm Darurat
- Alarm Darurat dengan Panggilan
- Alarm Darurat dengan Suara untuk Diikuti

PEMBERITAHUAN:
Hanya salah satu dari Alarm Darurat di atas dapat ditetapkan untuk tombol **Darurat** yang terprogram atau sakelar kaki Darurat.

Selain itu, tiap alarm mempunyai jenis berikut:

Reguler
Radio mentransmisikan sinyal alarm dan menunjukkan indikator audio dan/atau visual.

Senyap
Radio mentransmisikan sinyal alarm tanpa ada indikator audio atau visual. Radio menerima panggilan tanpa suara apa pun melalui speaker, sampai periode transmisi terprogram *hot mic* berakhir dan/atau Anda menekan tombol **PTT**.

Senyap dengan Suara
Radio mentransmisikan sinyal alarm tanpa indikator audio atau visual, tetapi memungkinkan panggilan masuk untuk berbunyi melalui speaker radio.

6.11.13.1

Menerima Alarm Darurat

Ketika Anda menerima Alarm Darurat:

- Nada akan berbunyi.
- LED merah berkedip.
- Layar menampilkan ikon **Darurat**, dan alias pemanggil Darurat atau jika terdapat lebih dari satu alarm, semua alias pemanggil darurat ditampilkan di Daftar Alarm.

1 Lakukan salah satu langkah berikut:

- Jika hanya ada satu alarm, tekan OK untuk melihat detail yang lebih lengkap.

- Jika ada lebih dari satu alarm, tekan ▲ atau ▼ ke alias yang diinginkan, lalu tekan OK untuk melihat detail yang lebih lengkap.

2 Tekan OK untuk melihat opsi tindakan.

3 Tekan ⮌ dan pilih Ya untuk keluar dari Daftar alarm.

4 Tekan OK untuk mengakses menu.

5 Pilih Daftar Alarm untuk kembali ke daftar Alarm.

6 Nada berbunyi dan LED berkedip merah sampai Anda keluar dari mode Darurat. Namun, nada tersebut dapat dimatikan. Lakukan salah satu langkah berikut:

- Tekan tombol **PTT** untuk memanggil grup radio yang menerima Alarm Darurat.
- Tekan sembarang tombol yang dapat diprogram.
- Keluar dari mode Darurat. Lihat Keluar dari Mode Darurat Setelah Menerima Alarm Darurat di halaman 461 .

7 Untuk kembali ke layar awal, lakukan tindakan berikut:

a Tekan ⮌.

b Tekan ▲ atau ▼ ke Ya.

c Tekan OK untuk memilih.

Radio kembali ke layar awal dan layar menampilkan ikon Darurat.

6.11.13.2
Merespons Alarm Darurat

1 Pastikan layar menampilkan Daftar Alarm. Tekan ▲ atau ▼ ke alias atau ID yang diinginkan.

2 Tekan tombol **PTT** untuk melakukan transmisi suara non-darurat ke grup yang sama dengan target Alarm Darurat.

Jika fitur Indikasi Saluran Bebas diaktifkan, nada peringatan singkat akan berbunyi saat pengguna radio yang melakukan transmisi melepaskan tombol **PTT**, yang menunjukkan saluran bebas dapat Anda gunakan untuk merespons.

PEMBERITAHUAN:
Suara darurat hanya dapat ditransmisikan melalui radio yang mengirim sinyal darurat. Semua radio lainnya, termasuk radio yang menerima sinyal darurat, mentransmisikan suara non-darurat.

LED hijau akan menyala. Radio akan tetap berada dalam mode Darurat.

3 Lakukan salah satu langkah berikut:

- Tunggu hingga Nada Izin Bicara selesai dan bicaralah dengan jelas ke mikrofon, jika diaktifkan.
- Tunggu hingga Sidetone **PTT** selesai dan bicaralah dengan jelas ke mikrofon, jika diaktifkan.

4 Lepaskan tombol **PTT** untuk mendengarkan.

Ketika radio yang memulai darurat merespons:

- LED akan berkedip hijau.
- Layar menampilkan ikon dan ID **Panggilan Grup**, ID radio yang melakukan transmisi, dan daftar Alarm.

6.11.13.3

Keluar dari Mode Darurat Setelah Menerima Alarm Darurat

Lakukan salah satu dari berikut untuk keluar dari mode Darurat setelah menerima alarm Darurat:

- Hapus item alarm.
- Matikan radio.

6.11.13.4

Mengirim Alarm Darurat

Dengan fitur ini Anda bisa mengirim Alarm Darurat, sinyal non-suara, yang memicu indikasi peringatan pada sebuah grup radio. Radio Anda tidak menampilkan indikator audio maupun visual selama mode Darurat bila radio diatur ke Senyap.

Ikuti prosedur untuk mengirim Alarm Darurat di radio Anda.

1 Tekan tombol **Darurat Aktif** terprogram.

Anda akan melihat satu dari hasil berikut ini:

- Layar menampilkan `Alarm Tx` dan alias tujuan.
- Layar menampilkan `Telegram Tx` dan alias tujuan.

LED hijau akan menyala. Ikon **Darurat** muncul.

PEMBERITAHUAN:
Jika diprogram, nada Pencarian Darurat akan berbunyi. Nada ini disenyapkan ketika radio memancarkan atau menerima suara, dan berhenti ketika radio keluar dari mode Darurat. Nada Pencarian Darurat dapat diprogram melalui CPS.

2 Tunggu respons.

Jika berhasil:

- Nada Darurat akan berbunyi.
- LED merah berkedip.
- Layar menampilkan `Alarm Terkirim`.

Jika tidak berhasil setelah batas mencoba tercapai:

- Nada akan berbunyi.
- Layar menampilkan `Alarm Gagal`.

Radio keluar dari mode Alarm Darurat dan kembali ke layar Awal.

6.11.13.5

Mengirim Alarm Darurat dengan Panggilan

Dengan fitur ini Anda bisa mengirim Alarm Darurat dengan Panggilan ke sekelompok radio. Setelah sebuah radio dalam grup itu memberi respons, grup radio tersebut bisa berkomunikasi melalui saluran Darurat terprogram.
Ikuti prosedur untuk mengirim Alarm Darurat dengan panggilan di radio Anda.

1 Tekan tombol terprogram **Darurat Aktif** atau sakelar kaki **Darurat**. Layar menampilkan Mengirim Alarm, yang bergantian dengan ID radio Anda.

Anda akan melihat hal berikut:

- Layar menampilkan `Telegram Tx` dan alias tujuan.

LED hijau akan menyala. Ikon **Darurat** muncul.

PEMBERITAHUAN:
Jika diprogram, nada Pencarian Darurat akan berbunyi. Nada ini disenyapkan ketika radio memancarkan atau menerima suara, dan berhenti ketika radio keluar dari mode Darurat.Nada Pencarian Darurat dapat diprogram oleh dealer atau administrator sistem Anda.

2 Tunggu respons.

Jika berhasil:

- Nada Darurat akan berbunyi.
- LED merah berkedip.
- Layar menampilkan `Alarm Terkirim`.
- Radio masuk ke mode panggilan Darurat ketika layar menampilkan `Darurat` dan alias grup tujuan.

3 Tekan tombol **PTT** untuk melakukan panggilan.

LED hijau akan menyala. Layar menampilkan ikon **Panggilan Grup**.

4 Lakukan salah satu langkah berikut:

- Tunggu hingga Nada Izin Bicara selesai dan bicaralah dengan jelas ke mikrofon, jika diaktifkan.
- Tunggu hingga Sidetone **PTT** selesai dan bicaralah dengan jelas ke mikrofon, jika diaktifkan.

5 Lepaskan tombol **PTT** untuk mendengarkan.

Layar menampilkan alias pemanggil dan grup.

6 Jika fitur Indikasi Saluran Bebas diaktifkan, nada peringatan singkat akan berbunyi saat pengguna radio yang melakukan transmisi melepaskan tombol **PTT**, yang menunjukkan saluran bebas dapat Anda gunakan untuk merespons. Tekan tombol **PTT** untuk menjawab panggilan.

7 Untuk keluar dari mode Darurat setelah panggilan berakhir, tekan tombol **Darurat Nonaktif**.

Radio Anda kembali ke layar Awal.

6.11.13.6

Alarm Darurat dengan Suara untuk Diikuti

Dengan fitur ini Anda bisa mengirim Alarm Darurat dengan Suara untuk Diikuti ke sekelompok radio. Mikrofon radio diaktifkan secara otomatis, yang memungkinkan Anda berkomunikasi dengan grup radio tanpa menekan tombol **PTT**. Keadaan mikrofon yang diaktifkan ini disebut *hot mic*.

PEMBERITAHUAN:
Radio Anda tidak dapat mendeteksi mikrofon non-IMPRES yang terpasang ke konektor aksesori belakang.
Bila tidak ada mikrofon yang terdeteksi pada konektor terprogram yang ditentukan, radio memeriksa konektor alternatif. Di sini, radio memberikan prioritas pada mikrofon yang terdeteksi.

Jika radio Anda telah mengaktifkan Mode Siklus Darurat, pengulangan *hot mic* dan periode penerimaan dilakukan selama durasi yang sudah diprogram. Selama Mode Siklus Darurat, panggilan yang diterima terdengar melalui speaker.

Jika tombol **PTT** ditekan selama jangka waktu penerimaan yang telah diprogram, Anda akan mendengar nada dilarang bicara, yang menunjukkan bahwa Anda harus melepas tombol **PTT**. Radio mengabaikan penekanan tombol **PTT** dan tetap dalam mode Darurat.

Jika Anda menekan tombol **PTT** selama *hot mic*, dan terus menekannya setelah durasi *hot mic* habis, radio terus mengirim transmisi sampai Anda melepas tombol **PTT**.

Jika permintaan Alarm Darurat gagal, radio tidak mencoba lagi mengirim permintaan, dan langsung masuk ke keadaan *hot mic*.

PEMBERITAHUAN:
Sebagian aksesori mungkin tidak mendukung *hot mic*. Tanyakan kepada dealer atau administrator sistem Anda untuk informasi selengkapnya.

6.11.13.7

Mengirim Alarm Darurat dengan Panduan Suara

1 Tekan tombol **Darurat Aktif** terprogram atau sakelar kaki **Darurat**.

Anda akan melihat salah satu hasil berikut:

- Layar menampilkan `Alarm Tx` dan alias tujuan.

LED hijau akan menyala. Ikon **Darurat** muncul.

2 Setelah layar menampilkan `Alarm Terkirim`, berbicaralah dengan jelas ke mikrofon.

Radio menghentikan transmisi secara otomatis di saat:

- Setelah durasi siklus antara *hot mic* dan menerima panggilan habis, jika Mode Siklus Darurat diaktifkan.
- Setelah durasi *hot mic* habis, jika Mode Siklus Darurat dinonaktifkan.

3 Tekan tombol **Darurat Nonaktif** untuk keluar dari mode Darurat.

Radio Anda kembali ke layar Awal.

6.11.13.8

Mengaktifkan Ulang Mode Darurat

Lakukan salah satu tindakan berikut:

- Ubah saluran ketika radio dalam mode Darurat.

PEMBERITAHUAN:
Anda hanya dapat mengaktifkan kembali mode darurat jika Anda mengaktifkan alarm darurat pada saluran baru.

- Tekan tombol terprogram **Darurat Aktif** selama status pengaktifan atau transmisi darurat.

Radio keluar dari status Mode darurat dan mengaktifkan kembali Darurat.

6.11.13.9

Keluar Mode Darurat Setelah Mengirim Alarm Darurat

Fitur ini hanya tersedia untuk radio yang mengirimkan Alarm Darurat.

Radio akan keluar dari Mode darurat saat:

- Menerima pemberitahuan (hanya untuk Alarm Darurat).
- Semua percobaan ulang untuk mengirim alarm habis.

PEMBERITAHUAN:
Jika radio dimatikan, radio keluar dari mode Darurat. Radio tidak akan menghidupkan ulang mode Darurat secara otomatis bila dihidupkan kembali.

Ikuti prosedur untuk keluar dari Mode darurat di radio.

Lakukan salah satu langkah berikut:

- Tekan tombol terprogram **Mati Darurat**.
- Ubah saluran ke saluran baru yang tidak memiliki konfigurasi sistem darurat.
  Layar menampilkan `Tidak Ada Darurat`.

6.11.13.10

Menghapus Item Alarm dari Daftar Alarm

1. Tekan OK untuk mengakses menu.
2. Tekan ▲ atau ▼ ke `Daftar Alarm`. Tekan OK untuk memilih.
3. Tekan ▲ atau ▼ ke item alarm yang diinginkan. Tekan OK untuk memilih.
4. Tekan ▲ atau ▼ ke `Hapus`. Tekan OK untuk memilih.

6.11.14

Pengolahan Pesan Teks

Radio Anda mampu menerima data, misalnya pesan teks, dari radio lain atau aplikasi pesan teks.

Ada dua jenis pesan teks, Pesan Teks Singkat Radio Mobile Digital (DMR) dan pesan teks. Panjang maksimal

Pesan Teks Singkat DMR adalah 23 karakter. Panjang maksimum pesan teks adalah 280 karakter, termasuk baris subjek. Baris subjek hanya muncul saat Anda menerima pesan dari aplikasi email.

PEMBERITAHUAN:
Panjang karakter maksimum hanya berlaku untuk model dengan perangkat lunak dan perangkat keras terbaru. Untuk model radio dengan perangkat lunak dan perangkat keras lama, panjang maksimum pesan teks adalah 140 karakter. Untuk informasi lebih lanjut, hubungi dealer Anda.

6.11.14.1

Pesan Teks

Pesan teks disimpan di Kotak Masuk, dan diurutkan sesuai pesan yang paling baru.

6.11.14.1.1

Melihat Pesan Teks

1 Tekan OK untuk mengakses menu.

2 Tekan ▲ atau ▼ ke `Pesan`. Tekan OK untuk memilih.

3 Tekan ▲ atau ▼ ke `Kotak Masuk`. Tekan OK untuk memilih.

Jika Kotak Masuk kosong:

- Layar menampilkan `Daftar Kosong`.
- Nada akan berbunyi jika Nada Keypad diaktifkan.

4 Tekan ▲ atau ▼ ke pesan yang diperlukan.

Tekan OK untuk memilih.

Layar menampilkan baris subjek jika pesan berasal dari aplikasi e-mail.

6.11.14.1.2

Melihat Pesan Teks Status Telemetri

Ikuti prosedur untuk melihat pesan teks status telemetri dari Kotak Masuk.

1 Tekan OK untuk mengakses menu.

2 Tekan ▲ atau ▼ ke `Pesan`. Tekan OK untuk memilih.

3 Tekan ▲ atau ▼ ke `Kotak Masuk`. Tekan OK untuk memilih.

4 Tekan ▲ atau ▼ ke pesan yang diperlukan.

Tekan OK untuk memilih.

Anda tidak dapat membalas pesan teks Status Telemetri.

Layar akan menampilkan `Telemetri: <Pesan Teks Status>`.

5 Tekan lama ⏎ untuk kembali ke layar Awal.

6.11.14.1.3

Merespons Pesan Teks

Ikuti prosedur untuk merespons pesan teks di radio Anda.

Ketika Anda menerima pesan teks:

- Layar menampilkan daftar Notifikasi disertai alias atau ID pengirim.
- Layar menampilkan ikon **Pesan**.

PEMBERITAHUAN:
Radio keluar dari layar peringatan pesan teks dan menyiapkan Panggilan Pribadi atau Grup ke pengirim pesan jika tombol **PTT** ditekan.

1 Lakukan salah satu langkah berikut:

- Tekan ▲ atau ▼ ke `Baca`. Tekan OK untuk memilih.
  Layar menampilkan pesan teks. Layar menampilkan baris subjek jika pesan berasal dari aplikasi e-mail.
- Tekan ▲ atau ▼ ke `Baca Nanti`. Tekan OK untuk memilih.
  Radio kembali ke layar yang dibuka sebelum Anda menerima pesan teks.

- Tekan ▲ atau ▼ ke Hapus. Tekan OK untuk memilih.

2 Lakukan salah satu langkah berikut:

- Tekan OK untuk kembali ke Kotak Masuk.
- Tekan OK sekali lagi untuk membalas, meneruskan, atau menghapus pesan teks.

6.11.14.1.4

Merespons Pesan Teks dengan Balasan

Ikuti prosedur untuk merespons pesan teks dengan pesan Teks Cepat di radio Anda.

1 Lakukan salah satu langkah berikut:

- Tekan tombol **Pesan Teks** terprogram. Lanjutkan ke Langkah langkah 3.
- Tekan OK untuk mengakses menu.

2 Tekan ▲ atau ▼ ke Pesan. Tekan OK untuk memilih.

3 Tekan ▲ atau ▼ ke Kotak Masuk. Tekan OK untuk memilih.

4 Tekan ▲ atau ▼ ke pesan yang diinginkan. Tekan OK untuk memilih.

Layar menampilkan baris subjek jika pesan berasal dari aplikasi e-mail.

5 Tekan OK untuk mengakses sub-menu.

6 Tekan ▲ atau ▼ ke Balas. Tekan OK untuk memilih.

7 Tekan ▲ atau ▼ ke Balas Cepat. Tekan OK untuk memilih.

8 Tekan ▲ atau ▼ ke pesan yang diinginkan.

Tekan OK untuk memilih.

Layar menampilkan pemberitahuan mini transisional, yang mengonfirmasi bahwa pesan sedang dikirim.

9 Tunggu respons.

Jika berhasil:

- Nada akan berbunyi.
- Layar menampilkan pemberitahuan mini positif.

Jika tidak berhasil:

- Nada akan berbunyi.
- Layar menampilkan pemberitahuan mini negatif.
- Radio kembali ke layar opsi `Kirim Ulang`.

6.11.14.1.5

Mengirim Ulang Pesan Teks

Ketika berada di layar opsi `Kirim Ulang`:

Tekan OK untuk mengirim ulang pesan yang sama ke alias atau ID subscriber atau grup yang sama.

Jika berhasil:

- Nada indikator positif akan berbunyi.
- Layar menampilkan pemberitahuan mini positif.

Jika tidak berhasil:

- Nada indikator negatif akan berbunyi.
- Layar menampilkan pemberitahuan mini negatif.
- Radio kembali ke layar opsi `Kirim Ulang`.

6.11.14.1.6

Meneruskan Pesan Teks

Ikuti prosedur untuk meneruskan pesan teks di radio Anda.

Ketika berada di layar opsi `Kirim Ulang`:

1 Tekan ▲ atau ▼ ke `Teruskan`, dan tekan OK untuk mengirim pesan yang sama ke alias atau ID subscriber atau grup.

2 Tekan ▲ atau ▼ ke alias atau ID yang diinginkan.Tekan OK untuk memilih.

Layar menampilkan pemberitahuan mini transisional, yang mengonfirmasi bahwa pesan sedang dikirim.

3 Tunggu respons.

Jika berhasil:

- Nada indikator positif akan berbunyi.
- Layar menampilkan pemberitahuan mini positif.

Jika tidak berhasil:

- Nada indikator negatif akan berbunyi.
- Layar menampilkan pemberitahuan mini negatif.

PEMBERITAHUAN:
Anda juga dapat memilih alamat radio target secara manual (lihat Meneruskan Pesan Teks Menggunakan Panggilan Manual di halaman 471).

6.11.14.1.7

Meneruskan Pesan Teks Menggunakan Panggilan Manual

Ikuti prosedur untuk meneruskan pesan teks menggunakan panggilan manual di radio Anda.

1 Tekan ▲ atau ▼ ke `Teruskan`. Tekan OK untuk memilih.

2 Tekan OK untuk mengirim pesan yang sama ke alias atau ID grup atau subscriber lain.

3 Tekan ▲ atau ▼ ke `Panggilan Manual`.

Tekan OK untuk memilih.

Layar menampilkan `Nomor Radio:`.

4 Masukkan ID subscriber, lalu tekan OK untuk melanjutkan.

Layar menampilkan pemberitahuan mini transisional, yang mengonfirmasi bahwa pesan sedang dikirim.

5 Tunggu respons.

Jika berhasil:

- Nada akan berbunyi.
- Layar menampilkan pemberitahuan mini positif.

Jika tidak berhasil:

- Nada akan berbunyi.
- Layar menampilkan pemberitahuan mini negatif.

6.11.14.1.8

Mengedit Pesan Teks

Pilih `Edit` untuk mengedit pesan.

PEMBERITAHUAN:
Jika terdapat baris subjek (untuk pesan yang diterima dari aplikasi email), Anda tidak dapat mengeditnya.

1 Tekan ▲ atau ▼ ke `Edit`. Tekan OK untuk memilih.

Layar menampilkan kursor berkedip.

2 Gunakan keypad untuk mengedit pesan.

- Tekan ◀ untuk bergerak satu spasi ke kiri.
- Tekan ▶ atau # untuk bergerak satu spasi ke kanan.
- Tekan * untuk menghapus karakter yang tidak diinginkan.
- Tekan lama # untuk mengganti metode entri teks.

3 Tekan OK setelah selesai membuat pesan.

4 Lakukan salah satu langkah berikut:

- Tekan atau ke Kirim dan tekan OK untuk mengirim pesan.
- Tekan atau ke Simpan dan tekan OK untuk menyimpan pesan ke folder Konsep.
- Tekan untuk mengedit pesan.
- Tekan untuk memilih antara menghapus pesan atau menyimpannya di folder Konsep.

6.11.14.1.9

Menulis Pesan Teks

Ikuti prosedur untuk menulis pesan teks di radio Anda.

1 Lakukan salah satu langkah berikut:

- Tekan tombol **Pesan Teks** terprogram. Lanjutkan ke langkah 3.
- Tekan OK untuk mengakses menu.

2 Tekan atau ke Pesan. Tekan OK untuk memilih.

3 Tekan atau ke Tulis. Tekan OK untuk memilih.

Kursor berkedip akan ditampilkan.

4 Gunakan keypad untuk mengetik pesan.

Tekan untuk bergerak satu spasi ke kiri.

Tekan atau untuk bergerak satu spasi ke kanan.

Tekan untuk menghapus karakter yang tidak diinginkan.

Tekan lama untuk mengganti metode entri teks.

5 Tekan OK setelah selesai membuat pesan.

Lakukan salah satu langkah berikut:

- Tekan OK untuk mengirim pesan.
- Tekan . Tekan atau untuk memilih antara mengedit, menghapus, atau menyimpan pesan. Tekan OK untuk memilih.

6.11.14.1.10

Mengirim Pesan Teks

Dalam prosedur ini Anda dianggap memiliki pesan teks yang baru ditulis atau pesan teks tersimpan.

Pilih penerima pesan. Lakukan salah satu langkah berikut:

- Tekan atau ke alias atau ID yang diinginkan. Tekan OK untuk memilih.
- Tekan atau ke `Panggilan Manual`. Tekan OK untuk memilih.Masukkan ID subscriber. Baris pertama layar menampilkan `Nomor Radio:`. Baris kedua layar menampilkan kursor yang berkedip. Masukkan alias atau ID subscriber. Tekan OK .

Layar akan menampilkan pemberitahuan mini sementara, yang mengonfirmasi bahwa pesan Anda sedang dikirim.

Jika berhasil:

- Nada akan berbunyi.
- Layar menampilkan pemberitahuan mini positif.

Jika tidak berhasil:

- Nada rendah akan terdengar.
- Layar menampilkan pemberitahuan mini negatif.
- Pesan dipindah ke folder Item Terkirim.
- Pesan ditandai dengan ikon Gagal Terkirim.

PEMBERITAHUAN:
Untuk pesan teks yang baru ditulis, radio kembali ke layar opsi `Kirim Ulang`.

6.11.14.1.11

Menghapus Pesan Teks dari Kotak Masuk

Ikuti prosedur untuk menghapus pesan teks dari Kotak Masuk di radio Anda.

1 Lakukan salah satu langkah berikut:

- Tekan tombol **Pesan Teks** terprogram. Lanjutkan ke langkah 3.
- Tekan OK untuk mengakses menu.

2 Tekan atau ke Pesan. Tekan OK untuk memilih.

3 Tekan atau ke Kotak Masuk. Tekan OK untuk memilih.

Jika Kotak Masuk kosong:

- Layar menampilkan Daftar Kosong.
- Nada akan berbunyi.

4 Tekan atau ke pesan yang diperlukan.

Tekan OK untuk memilih.

Layar menampilkan baris subjek jika pesan berasal dari aplikasi e-mail.

5 Tekan OK untuk mengakses sub-menu.

6 Tekan atau ke Hapus. Tekan OK untuk memilih.

7 Tekan atau ke Ya. Tekan OK untuk memilih.

Layar menampilkan pemberitahuan mini positif. Layar kembali ke Kotak Masuk.

6.11.14.1.12

Menghapus Semua Pesan Teks dari Kotak Masuk

Ikuti prosedur untuk menghapus semua pesan teks dari Kotak Masuk di radio Anda.

1 Lakukan salah satu langkah berikut:

- Tekan tombol **Pesan Teks** terprogram. Lanjutkan ke langkah 3.
- Tekan OK untuk mengakses menu.

2 Tekan atau ke Pesan. Tekan OK untuk memilih.

3 Tekan atau ke Kotak Masuk. Tekan OK untuk memilih.

Jika Kotak Masuk kosong:

- Layar menampilkan Daftar Kosong.
- Nada akan berbunyi.

4 Tekan atau ke Hapus Semua. Tekan OK untuk memilih.

5 Tekan atau ke Ya. Tekan OK untuk memilih.

Layar menampilkan pemberitahuan mini positif.

6.11.14.2

Pesan Teks Terkirim

Setelah terkirim ke radio lain, pesan akan disimpan di folder Item Terkirim. Pesan teks terkirim terbaru selalu ditambahkan ke bagian teratas di folder Item Terkirim. Anda dapat mengirim ulang, meneruskan, mengedit, atau menghapus pesan teks Terkirim.

Folder Item Terkirim mampu menyimpan maksimal 30 pesan terakhir yang terkirim. Ketika folder penuh, pesan teks terkirim berikutnya akan otomatis menggantikan pesan teks terlama di folder itu.

Jika Anda keluar dari layar pengiriman pesan teks ketika pesan sedang dikirimkan, radio memperbarui status pesan dalam folder Item Terkirim tanpa memberikan indikasi apa pun di layar atau melalui suara.

Jika radio berganti mode atau mati sebelum status pesan di Item Terkirim diperbarui, radio tidak akan dapat

menyelesaikan pesan Dalam Proses apa pun dan otomatis menandainya dengan ikon **Gagal Terkirim**.

Radio mendukung maksimal lima pesan Sedang Berlangsung dalam satu waktu. Selama periode ini, radio tidak dapat mengirimkan pesan baru apa pun dan otomatis menandainya dengan ikon **Gagal Terkirim**.

Jika tombol ditekan lama kapan saja, radio kembali ke layar Awal.

PEMBERITAHUAN:
Jika jenis saluran, misalnya saluran digital konvensional atau Capacity Plus, tidak cocok, Anda hanya dapat mengedit, meneruskan, atau menghapus Pesan terkirim.

6.11.14.2.1

Melihat Pesan Teks Terkirim

Ikuti prosedur untuk melihat pesan teks terkirim di radio Anda.

1 Lakukan salah satu langkah berikut:
   - Tekan tombol **Pesan Teks** terprogram. Lanjutkan ke langkah 3.
   - Tekan OK untuk mengakses menu.

2 Tekan atau ke `Pesan`. Tekan OK untuk memilih.

3 Tekan atau ke `Item Terkirim`. Tekan OK untuk memilih.

   Jika folder Item Terkirim kosong:
   - Layar menampilkan `Daftar Kosong`.
   - Nada rendah akan berbunyi jika Nada Keypad diaktifkan.

4 Tekan atau ke pesan yang diinginkan.

   Tekan OK untuk memilih.

   Ikon di sudut kanan atas layar menunjukkan status pesan. Lihat Ikon Item Terkirim.

6.11.14.2.2

Mengirim Pesan Teks Terkirim

Ikuti prosedur untuk mengirim sebuah pesan teks terkirim di radio Anda.

Ketika Anda melihat pesan Terkirim:

1 Tekan OK saat melihat pesan.

2 Anda dapat mengirim ulang atau meneruskan pesan teks terkirim. Lakukan salah satu langkah berikut:

- ke Kirim Ulang. Tekan OK untuk memilih.
- ke Teruskan. Tekan OK untuk memilih.

Layar menampilkan pemberitahuan mini transisional, yang mengonfirmasi bahwa pesan sedang dikirim.

3 Tunggu respons.

Jika berhasil:

- Nada indikator positif akan berbunyi.
- Layar menampilkan pemberitahuan mini positif.

Jika tidak berhasil:

- Nada indikator negatif akan berbunyi.
- Layar menampilkan pemberitahuan mini negatif.
- Radio masuk ke layar opsi Kirim Ulang. Lihat Mengirim Ulang Pesan Teks di halaman 168 untuk informasi selengkapnya.

6.11.14.2.3

Menghapus Pesan Teks Terkirim dari folder Item Terkirim

Ikuti prosedur untuk menghapus pesan teks terkirim dari folder Item Terkirim di radio Anda.

Ketika Anda melihat pesan Terkirim:

1 Tekan OK .

2 Tekan atau ke Hapus. Tekan OK untuk memilih.

6.11.14.2.4

Menghapus Semua Pesan Teks Terkirim dari folder Item Terkirim

Ikuti prosedur untuk menghapus semua pesan teks terkirim dari folder Item Terkirim di radio Anda.

1 Lakukan salah satu langkah berikut:

- Tekan tombol **Pesan Teks** terprogram. Lanjutkan ke langkah 3.
- Tekan OK untuk mengakses menu.

2 Tekan atau ke Pesan. Tekan OK untuk memilih.

3 Tekan atau ke Item Terkirim. Tekan OK untuk memilih.

Jika folder Item Terkirim kosong:

- Layar menampilkan Daftar Kosong.
- Nada akan berbunyi.

4 Tekan atau ke Hapus Semua. Tekan OK untuk memilih.

5 Lakukan salah satu langkah berikut:

- Tekan atau ke Ya. Tekan OK untuk memilih.
  Layar menampilkan pemberitahuan mini positif.
- Tekan atau ke Tidak. Tekan OK untuk memilih.
  Radio kembali ke layar sebelumnya.

6.11.14.3

Pesan SMS Tersimpan

Anda dapat menyimpan pesan SMS untuk mengirimkannya nanti.

Jika penekanan tombol **PTT** atau perubahan mode mengakibatkan radio keluar dari layar penulisan/pengeditan sewaktu Anda menulis atau mengedit pesan teks, maka pesan teks tersebut akan secara otomatis disimpan ke folder Konsep.

Pesan SMS yang paling baru disimpan selalu ditambahkan di bagian atas daftar Draf.

Folder Draf menyimpan maksimum 10 pesan terakhir yang disimpan. Saat folder penuh, pesan SMS yang berikutnya disimpan akan otomatis menggantikan pesan SMS terlama dalam folder.

6.11.14.3.1

Melihat Pesan Teks Tersimpan

1 Lakukan salah satu langkah berikut:

- Tekan tombol **Pesan Teks** terprogram. Lanjutkan ke langkah 3.
- Tekan OK untuk mengakses menu.

2 Tekan ▲ atau ▼ ke Pesan. Tekan OK untuk memilih.

3 Tekan ▲ atau ▼ ke Draf. Tekan OK untuk memilih.

4 Tekan ▲ atau ▼ ke pesan yang diperlukan.

Tekan OK untuk memilih.

6.11.14.3.2

Mengedit Pesan Teks Tersimpan

1 Tekan OK saat melihat pesan.

2 Tekan ▲ atau ▼ ke Edit. Tekan OK untuk memilih.

Kursor berkedip akan ditampilkan.

3 Gunakan keypad untuk mengetik pesan.

Tekan ◀ untuk bergerak satu spasi ke kiri.

Tekan ▶ atau # untuk bergerak satu spasi ke kanan.

Tekan * untuk menghapus karakter yang tidak diinginkan.

Tekan lama untuk mengganti metode entri teks.

4 Tekan setelah selesai membuat pesan.

Lakukan salah satu langkah berikut:

- Tekan atau ke Kirim. Tekan untuk mengirim pesan.
- Tekan . Tekan atau untuk memilih antara menyimpan atau menghapus pesan. Tekan untuk memilih.

6.11.14.3.3

Menghapus Pesan Teks Tersimpan dari Folder Konsep

1 Lakukan salah satu langkah berikut:

- Tekan tombol **Pesan Teks** terprogram. Lanjutkan ke langkah 3.
- Tekan untuk mengakses menu.

2 Tekan atau ke Pesan. Tekan untuk memilih.

3 Tekan atau ke Draf. Tekan untuk memilih.

4 Tekan atau ke pesan yang diperlukan.

Tekan untuk memilih.

5 Tekan atau ke Hapus. Tekan untuk menghapus pesan teks.

6.11.14.4

Pesan Teks Cepat

Radio Anda mendukung maksimum 50 pesan Teks Cepat yang telah diprogram oleh dealer.

Meski isi pesan Teks Cepat telah ditentukan sebelumnya, Anda dapat mengedit setiap pesan sebelum mengirimnya.

6.11.14.4.1

Mengirim Pesan Teks Cepat

Ikuti prosedur untuk mengirim pesan Teks Cepat yang sudah ditentukan sebelumnya di radio Anda ke alias yang sudah ditentukan sebelumnya.

1 Lakukan salah satu langkah berikut:

- Tekan tombol **Pesan Teks** terprogram. Lanjutkan ke langkah 6.
- Tekan tombol **Akses Satu Sentuhan** terprogram. Layar menampilkan pemberitahuan mini transisional, yang mengonfirmasi bahwa pesan sedang dikirim.

  Lanjutkan ke langkah 6.
- Tekan OK untuk mengakses menu.

2 Tekan atau ke Pesan. Tekan OK untuk memilih.

3 Tekan atau ke Teks Cepat. Tekan OK untuk memilih.

4 Tekan atau ke pesan Teks Cepat yang diperlukan. Tekan OK untuk memilih.

5 Lakukan hal berikut untuk memilih penerima dan mengirim pesan.

Layar menampilkan pemberitahuan mini transisional, yang mengonfirmasi bahwa pesan sedang dikirim.

6 Tunggu respons.

Jika berhasil:

- Nada indikator positif akan berbunyi.
- Layar menampilkan pemberitahuan mini positif.

Jika tidak berhasil:

- Nada indikator negatif akan berbunyi.
- Layar menampilkan pemberitahuan mini negatif.
- Radio masuk ke layar opsi Kirim Ulang. Lihat Mengirim Ulang Pesan Teks di halaman 168 untuk informasi selengkapnya.

6.11.15

Konfigurasi Entri Teks

Radio ini memungkinkan Anda mengonfigurasi teks yang berbeda.

Anda dapat mengonfigurasi pengaturan berikut untuk memasukkan teks di radio Anda:

- Prediksi Kata
- Koreksi Kata
- Kapitalisasi Kalimat
- Kata Saya

Radio Anda mendukung metode entri teks berikut:

- Angka
- Simbol
- Prediktif atau Multisentuh
- Bahasa (Jika diprogram)

PEMBERITAHUAN:

Tekan kapan saja untuk kembali ke layar sebelumnya atau tekan lama untuk kembali ke Layar Awal. Radio keluar dari layar saat ini setelah pencatat waktu nonaktif berakhir.

6.11.15.1

Mengaktifkan atau Menonaktifkan Koreksi Kata

Menyediakan pilihan kata alternatif saat kata yang dimasukkan ke dalam editor teks tidak dikenali oleh kamus yang ada di dalamnya.

1. Tekan OK untuk mengakses menu.
2. Tekan atau ke `Utilitas`. Tekan OK untuk memilih.
3. Tekan atau ke `Pengaturan Radio`. Tekan OK untuk memilih.
4. Tekan atau ke `Entri Teks`. Tekan OK untuk memilih.
5. Tekan atau ke `Koreksi Kata`. Tekan OK untuk memilih.

6 Lakukan salah satu langkah berikut:

- Tekan ▲ atau ▼ ke Koreksi Kata. Tekan OK untuk memilih.
- Tekan untuk mengaktifkan Koreksi Kata. Jika diaktifkan, ✓ muncul di sebelah Diaktifkan.
- Tekan untuk menonaktifkan Koreksi Kata. Jika dinonaktifkan, ✓ hilang dari sebelah Diaktifkan.

6.11.15.2

Mengaktifkan atau Menonaktifkan Prediksi Kata

Prediksi Kata: Radio Anda bisa mempelajari urutan kata umum yang sering Anda masukkan. Kemudian memprediksi kata berikutnya yang mungkin ingin Anda gunakan setelah memasukkan kata pertama dari urutan kata umum ke dalam editor teks.

1 Tekan OK untuk mengakses menu.

2 Tekan ▲ atau ▼ ke Utilitas. Tekan OK untuk memilih.

3 Tekan ▲ atau ▼ ke Pengaturan Radio. Tekan OK untuk memilih.

4 Tekan ▲ atau ▼ ke Entri Teks. Tekan OK untuk memilih.

5 Tekan ▲ atau ▼ ke Prediksi Kata. Tekan OK untuk memilih.

6 Lakukan salah satu langkah berikut:

- Tekan OK untuk mengaktifkan Prediksi Kata. Jika diaktifkan, ✓ muncul di sebelah Diaktifkan.
- Tekan OK untuk menonaktifkan Kontrol Distorsi Dinamis Mikrofon. Jika dinonaktifkan, ✓ hilang dari sebelah Diaktifkan.

6.11.15.3

Kapitalisasi Kalimat

Fitur ini digunakan untuk mengaktifkan kapitalisasi secara otomatis untuk huruf awal kata pertama pada setiap kalimat baru.

1 Tekan OK untuk mengakses menu.

2 Tekan ▲ atau ▼ ke Utilitas. Tekan OK untuk memilih.

3 Tekan ▲ atau ▼ ke Pengaturan Radio. Tekan OK untuk memilih.

4 Tekan ▲ atau ▼ ke Entri Teks. Tekan OK untuk memilih.

5 Tekan ▲ atau ▼ ke Kapitalisasi Kalimat. Tekan OK untuk memilih.

6 Lakukan salah satu langkah berikut:

- Tekan OK untuk mengaktifkan Kapitalisasi Kalimat. Jika diaktifkan, ✓ muncul di sebelah Diaktifkan.
- Tekan OK untuk menonaktifkan Kapitalisasi Kalimat. Jika dinonaktifkan, ✓ hilang dari sebelah Diaktifkan.

6.11.15.4

Melihat Kata Khusus

Anda dapat menambahkan kata khusus sendiri ke kamus internal di radio. Radio Anda menyimpan daftar yang berisi kata ini.

1 Tekan OK untuk mengakses menu.

2 Tekan ▲ atau ▼ ke Utilitas. Tekan OK untuk memilih.

3 Tekan ▲ atau ▼ ke Pengaturan Radio. Tekan OK untuk memilih.

4 Tekan ▲ atau ▼ ke `Entri Teks`. Tekan OK untuk memilih.

5 Tekan ▲ atau ▼ ke `Kata-Kata Saya`. Tekan OK untuk memilih.

6 Tekan ▲ atau ▼ ke `Daftar Kata`. Tekan OK untuk memilih.

Layar akan menampilkan daftar kata khusus tersebut.

6.11.15.5

Mengedit Kata Khusus

Anda bisa mengedit kata khusus yang disimpan di radio Anda.

1 Tekan OK untuk mengakses menu.

2 Tekan ▲ atau ▼ ke `Utilitas`. Tekan OK untuk memilih.

3 Tekan ▲ atau ▼ ke `Pengaturan Radio`. Tekan OK untuk memilih.

4 Tekan ▲ atau ▼ ke `Entri Teks`. Tekan OK untuk memilih.

5 Tekan ▲ atau ▼ ke `Kata-Kata Saya`. Tekan OK untuk memilih.

6 Tekan ▲ atau ▼ ke `Daftar Kata`. Tekan OK untuk memilih.

Layar akan menampilkan daftar kata khusus tersebut.

7 Tekan ▲ atau ▼ ke kata yang diinginkan. Tekan OK untuk memilih.

8 Tekan atau ke Edit. Tekan untuk memilih.

9 Gunakan keypad untuk mengedit kata khusus Anda.

- Tekan untuk bergerak satu spasi ke kiri.
- Tekan tombol untuk bergerak satu spasi ke kanan.
- Tekan untuk menghapus karakter yang tidak diinginkan.
- Tekan lama untuk mengganti metode entri teks.

10 Tekan setelah kata khusus Anda selesai.

Layar menampilkan pemberitahuan mini transisional, yang mengonfirmasikan bahwa pembaruan status Anda sedang disimpan.

- Jika kata khusus disimpan, sebuah nada akan berbunyi dan layar menampilkan pemberitahuan mini positif.
- Jika kata khusus tidak disimpan, sebuah nada rendah akan berbunyi dan layar menampilkan pemberitahuan mini negatif.

6.11.15.6

Menambahkan Kata Khusus

Anda dapat menambahkan kata khusus ke kamus internal radio.

1 Tekan untuk mengakses menu.

2 Tekan atau ke Utilitas. Tekan untuk memilih.

3 Tekan atau ke Pengaturan Radio. Tekan untuk memilih.

4 Tekan atau ke Entri Teks. Tekan untuk memilih.

5 Tekan ▲ atau ▼ ke `Kata-Kata Saya`. Tekan OK untuk memilih.

6 Tekan ▲ atau ▼ ke `Tambah Kata Baru`.

Tekan OK untuk memilih.

Layar akan menampilkan daftar kata khusus tersebut.

7 Gunakan keypad untuk mengedit kata khusus Anda.

- Tekan ◀ untuk bergerak satu spasi ke kiri.
- Tekan tombol ▶ untuk bergerak satu spasi ke kanan.
- Tekan * untuk menghapus karakter yang tidak diinginkan.
- Tekan lama # untuk mengganti metode entri teks.

8 Tekan OK setelah kata khusus Anda selesai.

Layar menampilkan pemberitahuan mini transisional, yang mengonfirmasikan bahwa pembaruan status Anda sedang disimpan.

- Jika kata khusus disimpan, sebuah nada akan berbunyi dan layar menampilkan pemberitahuan mini positif.
- Jika kata khusus tidak disimpan, sebuah nada rendah akan berbunyi dan layar menampilkan pemberitahuan mini negatif.

6.11.15.7
Menghapus Kata Khusus

Anda bisa menghapus kata khusus yang disimpan di radio Anda.

1 Tekan OK untuk mengakses menu.

2 Tekan ▲ atau ▼ ke `Utilitas`. Tekan OK untuk memilih.

3 Tekan ▲ atau ▼ ke Pengaturan Radio.

Tekan OK untuk memilih.

4 Tekan ▲ atau ▼ ke Entri Teks. Tekan OK untuk memilih.

5 Tekan ▲ atau ▼ ke Kata-Kata Saya. Tekan OK untuk memilih.

6 Tekan ▲ atau ▼ ke kata yang diinginkan.

Tekan OK untuk memilih.

7 Tekan ▲ atau ▼ ke Hapus. Tekan OK untuk memilih.

8 Lakukan salah satu hal berikut.

- Pada Hapus Entri?, tekan OK untuk memilih Ya. Layar menampilkan Entri Dihapus.
- Tekan ▲ atau ▼ ke Tidak. Tekan OK untuk kembali ke layar sebelumnya.

6.11.15.8

Menghapus Semua Kata Khusus

Anda dapat menghapus semua kata khusus dari kamus internal di radio Anda.

1 Tekan OK untuk mengakses menu.

2 Tekan ▲ atau ▼ ke Utilitas. Tekan OK untuk memilih.

3 Tekan ▲ atau ▼ ke Pengaturan Radio.

Tekan OK untuk memilih.

4 Tekan ▲ atau ▼ ke Entri Teks. Tekan OK untuk memilih.

5 Tekan ▲ atau ▼ ke `Kata-Kata Saya`. Tekan OK untuk memilih.

6 Tekan ▲ atau ▼ ke `Hapus Semua`. Tekan OK untuk memilih.

7 Lakukan salah satu langkah berikut:

- Pada `Hapus Entri?`, tekan OK untuk memilih `Ya`. Layar menampilkan `Semua Entri Dihapus`.
- Tekan ▲ atau ▼ ke `Tidak` untuk kembali ke layar sebelumnya. Tekan OK untuk memilih.

6.11.16

Tiket Tugas

Fitur ini memungkinkan radio Anda menerima pesan dari dispatcher berisi daftar tugas yang harus dijalankan.

PEMBERITAHUAN:
Fitur ini dapat disesuaikan melalui Customer Programming Software (CPS) sesuai dengan persyaratan pengguna. Tanyakan kepada dealer atau administrator sistem Anda untuk informasi selengkapnya.

Ada dua folder yang berisi Tiket Tugas yang berbeda:

Folder Tugas Saya
Tiket Tugas yang dapat dipersonalisasikan ditugaskan ke ID pengguna yang Anda masuki.

Folder Tugas yang Dibagikan
Tiket Tugas yang dibagikan ditetapkan ke grup atau individu.

Anda dapat merespons Tiket Tugas untuk menyortirnya ke dalam Folder Tiket Tugas. Secara default, foldernya adalah **Semua**, **Baru**, **Dimulai**, dan **Selesai**. Untuk 10 folder tambahan, hubungi dealer atau administrator sistem Anda.

Tiket Tugas akan disimpan meskipun radio dimatikan dan dihidupkan kembali.

Semua Tiket Tugas berada di folder **Semua**. Tergantung bagaimana radio Anda diprogram, Tiket Tugas disortir berdasarkan tingkat prioritas yang diikuti dengan waktu penerimaan. Tiket Tugas Baru, yaitu Tiket Tugas dengan

status perubahan terbaru, dan Tiket Tugas dengan prioritas tertinggi dicantumkan terlebih dulu.

Setelah mencapai jumlah maksimum, Tiket Tugas berikutnya akan secara otomatis menggantikan Tiket Tugas terakhir yang ada di radio. Radio Anda mendukung maksimum 100 atau 500 Tiket Tugas, tergantung pada model radio. Tanyakan kepada dealer atau administrator sistem Anda untuk informasi selengkapnya. Radio Anda secara otomatis mendeteksi dan membuang Tiket Tugas duplikat dengan ID Tiket Tugas yang sama.

Tergantung pada pentingnya Tiket Tugas, dispatcher menambahkan Tingkat Prioritas ke dalamnya. Ada tiga tingkat prioritas: Prioritas 1, Prioritas 2, dan Prioritas 3. Prioritas 1 memiliki prioritas tertinggi dan Prioritas 3 adalah yang terendah. Selain itu ada Tiket Tugas tanpa prioritas.

Radio Anda memperbarui saat dispatcher melakukan perubahan berikut ini:

- Memodifikasi konten Tiket Tugas.
- Menambahkan atau mengedit Tingkat Prioritas Tiket Tugas.
- Memindahkan Tiket Tugas dari folder ke folder.
- Membatalkan Tiket Tugas.

6.11.16.1

Mengakses Folder Tiket Tugas

Ikuti prosedur untuk mengakses folder Tiket Tugas.

1 Lakukan salah satu langkah berikut:
   - Tekan tombol **Tiket Tugas** terprogram. Lanjutkan ke langkah 3.
   - Tekan OK untuk mengakses menu.

2 Tekan ▲ atau ▼ ke `Tiket Tugas`. Tekan OK untuk memilih.

3 Tekan ▲ atau ▼ ke folder yang diinginkan. Tekan OK untuk memilih.

4 Tekan ▲ atau ▼ ke Tiket Tugas yang diinginkan. Tekan OK untuk memilih.

6.11.16.2

Masuk atau Keluar dari Server Jauh

Fitur ini memungkinkan Anda masuk dan keluar dari server jauh menggunakan ID pengguna.

1 Tekan OK untuk mengakses menu.

2 Tekan ▲ atau ▼ ke `Masuk`. Tekan OK untuk memilih.

Jika Anda sudah masuk, menu menampilkan `Keluar`.

Layar menampilkan pemberitahuan mini transisional, yang menunjukkan permintaan sedang diproses.

3 Tunggu respons.

Jika berhasil:

- Nada indikator positif akan berbunyi.
- Layar menampilkan pemberitahuan mini positif.

Jika tidak berhasil:

- Nada indikator negatif akan berbunyi.
- Layar menampilkan pemberitahuan mini negatif.

6.11.16.3

Membuat Tiket Tugas

Radio mempunyai kemampuan untuk membuat Tiket Tugas berdasarkan template Tiket Tugas dan mengirim tugas yang harus dilakukan.

Perangkat lunak pemrograman CPS diperlukan untuk mengonfigurasi template Tiket Tugas.

1 Tekan OK untuk mengakses menu.

2 Tekan ▲ atau ▼ ke `Tiket Tugas`. Tekan OK untuk memilih.

3 Tekan ▲ atau ▼ ke `Buat Tiket`. Tekan OK untuk memilih.

6.11.16.4

Merespons Tiket Tugas

Ikuti prosedur untuk merespons tiket tugas di radio Anda.

1 Tekan OK untuk mengakses menu.

2 Tekan ▲ atau ▼ ke `Tiket Tugas`. Tekan OK untuk memilih.

3 Tekan ▲ atau ▼ ke folder yang diinginkan. Tekan OK untuk memilih.

4 Tekan ▲ atau ▼ ke tiket tugas yang diinginkan. Tekan OK untuk memilih.

5 Tekan OK sekali lagi untuk mengakses submenu.

Anda dapat juga menekan tombol angka yang terkait (1-9) untuk **Balas Cepat**.

6 Tekan ▲ atau ▼ ke tiket tugas yang diinginkan. Tekan OK untuk memilih.

Layar menampilkan pemberitahuan mini transisional, yang menunjukkan permintaan sedang diproses.

7 Tunggu respons.

Jika berhasil:

- Nada indikator positif akan berbunyi.
- Layar menampilkan pemberitahuan mini positif.

Jika tidak berhasil:

- Nada indikator negatif akan berbunyi.
- Layar menampilkan pemberitahuan mini negatif.

6.11.16.5

Mengirim Tiket Tugas Menggunakan Satu Template Tiket Tugas

Jika radio Anda dikonfigurasi dengan satu template Tiket Tugas, lakukan tindakan berikut untuk mengirim Tiket Tugas.

1 Gunakan keypad untuk mengetik nomor ruang yang diinginkan. Tekan OK untuk memilih.

2 Tekan atau ke Status Ruang. Tekan OK untuk memilih.

3 Tekan atau ke opsi yang diinginkan. Tekan OK untuk memilih.

4 Tekan atau ke Kirim. Tekan OK untuk memilih.

Layar menampilkan pemberitahuan mini transisional, yang menunjukkan permintaan sedang diproses.

5 Tunggu respons.

Jika berhasil:

- Nada indikator positif akan berbunyi.
- Layar menampilkan pemberitahuan mini positif.

Jika tidak berhasil:

- Nada indikator negatif akan berbunyi.
- Layar menampilkan pemberitahuan mini negatif.

6.11.16.6

Mengirim Tiket Tugas Menggunakan Lebih Dari Satu Template Tiket Tugas

Jika radio Anda dikonfigurasi dengan lebih dari satu template Tiket Tugas, lakukan tindakan berikut untuk mengirim Tiket Tugas.

1 Tekan atau ke opsi yang diinginkan. Tekan OK untuk memilih.

2 Tekan atau ke Kirim. Tekan OK untuk memilih.

Layar menampilkan pemberitahuan mini transisional, yang menunjukkan permintaan sedang diproses.

3 Tunggu respons.

Jika berhasil:

- Nada indikator positif akan berbunyi.

- Layar menampilkan pemberitahuan mini positif.

Jika tidak berhasil:

- Nada indikator negatif akan berbunyi.
- Layar menampilkan pemberitahuan mini negatif.

6.11.16.7

Menghapus Tiket Tugas

Ikuti prosedur untuk menghapus tiket tugas di radio Anda.

1 Lakukan salah satu langkah berikut:

- Tekan tombol **Tiket Tugas** terprogram. Lanjutkan ke langkah 4
- Tekan OK untuk mengakses menu.

2 Tekan ▲ atau ▼ ke `Tiket Tugas`. Tekan OK untuk memilih.

3 Tekan ▲ atau ▼ ke folder yang diinginkan. Tekan OK untuk memilih.

4 Tekan ▲ atau ▼ ke `Semua` folder. Tekan OK untuk memilih.

5 Tekan ▲ atau ▼ ke Tiket Tugas yang diinginkan. Tekan OK untuk memilih.

6 Tekan OK lagi sewaktu menampilkan Tiket Tugas.

7 Tekan ▲ atau ▼ ke `Hapus`. Tekan OK untuk memilih.

Layar menampilkan pemberitahuan mini transisional, yang menunjukkan permintaan sedang diproses.

8 Tunggu respons.

Jika berhasil:

- Nada indikator positif akan berbunyi.
- Layar menampilkan pemberitahuan mini positif.

Jika tidak berhasil:

- Nada indikator negatif akan berbunyi.

- Layar menampilkan pemberitahuan mini negatif.

6.11.16.8

Menghapus Semua Tiket Tugas

Ikuti prosedur untuk menghapus semua tiket tugas di radio Anda.

1 Lakukan salah satu langkah berikut:
   - Tekan tombol **Tiket Tugas** terprogram. Lanjutkan ke langkah 3.
   - Tekan OK untuk mengakses menu.

2 Tekan atau ke `Tiket Tugas`. Tekan OK untuk memilih.

3 Tekan atau ke folder yang diinginkan. Tekan OK untuk memilih.

4 Tekan atau ke `Semua` folder. Tekan OK untuk memilih.

5 Tekan atau ke `Hapus Semua`. Tekan OK untuk memilih.

6 Lakukan salah satu langkah berikut:
   - Tekan atau ke `Ya`. Tekan OK untuk memilih.
     Layar menampilkan pemberitahuan mini positif.
   - Tekan atau ke `Tidak`. Tekan OK untuk memilih.
     Radio kembali ke layar sebelumnya.

6.11.17

Privasi

Fitur ini membantu mencegah pengguna yang tidak sah menguping di saluran menggunakan solusi pengacakan berbasis perangkat lunak. Transmisi pengiriman sinyal dan identifikasi pengguna tidak diacak.

Privasi pada radio Anda harus diaktifkan pada saluran tersebut untuk mengirim transmisi dengan privasi diaktifkan, meskipun ini bukan persyaratan yang perlu untuk menerima transmisi. Ketika berada pada saluran dengan privasi diaktifkan, radio masih bisa menerima transmisi yang jernih atau tanpa diacak.

Model radio tertentu belum tentu mempunyai fitur Privasi, atau mempunyai konfigurasi berbeda. Tanyakan kepada dealer atau administrator sistem Anda untuk informasi selengkapnya.

Radio Anda mendukung dua jenis privasi, tetapi hanya satu yang dapat dialokasikan ke radio Anda. Privasi tersebut adalah:

- Privasi Dasar
- Privasi Ditingkatkan

Untuk menghilangkan pengacakan pada panggilan atau transmisi data dengan privasi diaktifkan, radio harus diprogram agar memiliki Kunci Privasi yang sama, atau Nilai Kunci dan ID Kunci yang sama dengan radio yang melakukan transmisi untuk Privasi Ditingkatkan.

Jika radio menerima panggilan teracak yang berbeda Kunci Privasi, atau yang berbeda Nilai Kunci dan ID Kunci, Anda akan mendengar transmisi yang kacau untuk Privasi Dasar atau tidak akan mendengar apa-apa untuk Privasi Ditingkatkan.

Pada saluran yang mengaktifkan privasi, radio dapat menerima panggilan jernih atau tanpa diacak, tergantung pemrograman radio Anda. Selain itu, radio mungkin memutar nada peringatan atau tidak, tergantung pemrogramannya.

LED hijau akan menyala saat radio melakukan transmisi dan akan berkedip dengan cepat saat radio menerima transmisi yang berlangsung dengan privasi diaktifkan.

PEMBERITAHUAN:
Fitur ini tidak tersedia dalam saluran Citizens Band yang berada dalam frekuensi yang sama.

6.11.17.1

Mengaktifkan atau Menonaktifkan Privasi

Ikuti prosedur untuk mengaktifkan atau menonaktifkan privasi di radio Anda.

1 Lakukan salah satu langkah berikut:
   - Tekan tombol terprogram **Privasi**. Lompati langkah-langkah pemrosesan.

- Tekan OK untuk mengakses menu.

2 Tekan ▲ atau ▼ ke `Utilitas`. Tekan OK untuk memilih.

3 Tekan ▲ atau ▼ ke `Pengaturan Radio`. Tekan OK untuk memilih.

4 Tekan ▲ atau ▼ ke ***<privasi yang diiperlukan>***. Tekan OK untuk memilih.

- Jika privasi diaktifkan, layar akan menampilkan ✓ di sebelah `Diaktifkan`.
- Jika privasi dinonaktifkan, layar akan menampilkan kotak kosong di samping `Diaktifkan`.

6.11.18

Larangan Tanggapan

Fitur ini mencegah radio menanggapi transmisi masuk.

PEMBERITAHUAN:
Hubungi dealer Anda untuk mengetahui bagaimana radio Anda diprogram.

Jika aktif, radio tidak menghasilkan transmisi keluar untuk menanggapi transmisi masuk, seperti Pemeriksaan Radio, Peringatan Panggilan, Penonaktifan Radio, Monitor Jarak Jauh, Layanan Pendaftaran Otomatis (ARS), Penanggapan Pesan Pribadi, dan Pengiriman laporan lokasi GNSS.

Saat fitur ini aktif, radio tidak dapat menerima Panggilan Pribadi yang Dikonfirmasi. Namun, radio dapat mengirim transmisi secara manual.

6.11.18.1

Menonaktifkan atau Menonaktifkan Larangan Tanggapan

Ikuti prosedur untuk mengaktifkan atau menonaktifkan Larangan Tanggapan di radio.

Tekan tombol terprogram **Larangan Tanggapan**.

Jika berhasil:

- Nada indikator positif akan berbunyi.
- Layar menampilkan pemberitahuan mini positif.

Jika tidak berhasil:

- Nada indikator negatif akan berbunyi.
- Layar menampilkan pemberitahuan mini negatif.

6.11.19

Kontrol Multi-Site

Radio Anda dapat mencari site dan beralih antar site saat sinyal lemah atau radio tidak dapat mendeteksi sinyal dari site saat ini.

Saat sinyal kuat, radio akan tetap berada pada site saat ini.

Pengaturan ini berlaku saat saluran radio Anda saat ini merupakan bagian dari IP Site Connect atau konfigurasi Plus-Multi-Site.

Radio Anda dapat melakukan salah satu dari pencarian site berikut:

- Pencarian Site Otomatis
- Pencarian Site Manual

Jika saluran saat ini adalah saluran multi-site dengan lampiran daftar jelajah dan berada di luar jangkauan, dan site tidak terkunci, radio juga melakukan pencarian site secara otomatis.

6.11.19.1

Mengaktifkan Pencarian Site Manual

Jika menemukan site baru, radio akan menampilkan indikasi sebagai berikut:

- Sebuah nada positif berbunyi.

Jika menemukan site baru, radio akan menampilkan indikasi sebagai berikut:

- Sebuah nada negatif akan berbunyi.

6.11.19.2

Kunci Site Aktif/Nonaktif

Ketika diaktifkan, radio akan mencari site saat ini saja. Ketika dinonaktifkan, radio akan mencari site lain di samping site saat ini.

Tekan tombol **Kunci Site**.

Jika fungsi **Kunci Site** diaktifkan:

- Anda mendengar nada indikator positif, yang menunjukkan radio telah dikunci ke site saat ini.
- Layar akan menampilkan `Site Terkunci.`

Jika fungsi **Kunci Site** dinonaktifkan:

- Anda mendengar nada indikator negatif, menandakan bahwa radio tidak terkunci.
- Layar akan menampilkan `Site Tidak Terkunci`.

6.11.19.3

Mengakses Daftar Site Tetangga

Fitur ini memungkinkan pengguna memeriksa daftar site yang bersebelahan dengan site asal saat ini. Ikuti prosedur untuk mengakses Daftar Site Tetangga:

1. Tekan OK untuk mengakses menu.
2. Tekan ▲ atau ▼ ke `Utilitas`. Tekan OK untuk memilih.
3. Tekan ▲ atau ▼ ke `Info Radio`. Tekan OK untuk memilih.
4. Tekan ▲ atau ▼ ke `Site Tetangga`. Tekan OK untuk memilih.

6.11.20

Keamanan

Fitur ini memungkinkan Anda mengaktifkan atau menonaktifkan radio di dalam sistem.

Misalnya, Anda ingin menonaktifkan radio yang dicuri agar pengguna yang tidak sah tidak dapat menggunakannya, dan mengaktifkan radio tersebut ketika sudah ditemukan.

Ada dua cara untuk mengaktifkan atau menonaktifkan radio, dengan dan tanpa autentikasi.

Fitur Penonaktifan Radio dengan Autentikasi dapat dibeli. Di Penonaktifan Radio dengan Autentikasi, Anda harus melakukan verifikasi saat mengaktifkan atau menonaktifkan radio. Saat radio menerapkan fitur ini ke radio target dengan Autentikasi Pengguna, frasa sandi diperlukan. Frasa sandi sudah diprogram sebelumnya ke radio target melalui CPS.

Anda tidak akan menerima respons jika menekan selama proses Pengaktifan Radio atau Penonaktifan Radio.

PEMBERITAHUAN:
Tanyakan kepada dealer atau administrator sistem Anda untuk informasi selengkapnya.

6.11.20.1

Menonaktifkan Radio

Ikuti prosedur untuk menonaktifkan radio.

1. Tekan tombol **Penonaktifan Radio** terprogram.
2. Tekan atau ke alias atau ID yang diinginkan.
3. Tekan OK untuk memilih. Salah satu skenario berikut ini akan terjadi:
   - Layar menampilkan pemberitahuan mini transisional, yang menunjukkan permintaan sedang diproses. LED akan berkedip hijau.
   - Akan muncul layar frase sandi.

   Masukkan frase sandi. Tekan OK untuk melanjutkan.
   - Jika frasa sandi benar, layar menampilkan pemberitahuan mini transisional, yang menunjukkan permintaan sedang diproses. LED hijau akan menyala.
   - Jika frase sandi salah, layar menampilkan pemberitahuan mini negatif, dan Anda akan kembali ke layar sebelumnya.
4. Tunggu respons.

   Jika berhasil:
   - Nada indikator positif akan berbunyi.
   - Layar menampilkan pemberitahuan mini positif.

   Jika tidak berhasil:
   - Nada indikator negatif akan berbunyi.
   - Layar menampilkan pemberitahuan mini negatif.

6.11.20.2

Menonaktifkan Radio Menggunakan Daftar Kontak

Ikuti prosedur untuk menonaktifkan radio menggunakan daftar Kontak.

1 Tekan OK untuk mengakses menu.

2 Tekan ▲ atau ▼ ke Kontak.Tekan OK untuk memilih.

3 Tekan ▲ atau ▼ ke alias atau ID yang diinginkan.Tekan OK untuk memilih.

4 Tekan ▲ atau ▼ ke Penonaktifan Radio.

5 Tekan OK untuk memilih. Salah satu skenario berikut ini akan terjadi:

- Layar menampilkan pemberitahuan mini transisional, yang menunjukkan permintaan sedang diproses. LED akan berkedip hijau.
- Akan muncul layar frase sandi.

  Masukkan frase sandi. Tekan OK untuk melanjutkan.

  - Jika frasa sandi benar, layar menampilkan pemberitahuan mini transisional, yang menunjukkan permintaan sedang diproses. LED hijau akan menyala.
  - Jika frase sandi salah, layar menampilkan pemberitahuan mini negatif, dan Anda akan kembali ke layar sebelumnya.

6 Tunggu respons.

Jika berhasil:

- Nada indikator positif akan berbunyi.
- Layar menampilkan pemberitahuan mini positif.

Jika tidak berhasil:

- Nada indikator negatif akan berbunyi.
- Layar menampilkan pemberitahuan mini negatif.

6.11.20.3

Menonaktifkan Radio Menggunakan Panggilan Manual

Ikuti prosedur untuk menonaktifkan radio menggunakan panggilan manual.

1 Tekan OK untuk mengakses menu.

2 Tekan ▲ atau ▼ ke Kontak. Tekan OK untuk memilih.

3 Tekan ▲ atau ▼ ke Panggilan Manual.

Tekan OK untuk memilih.

4 Tekan ▲ atau ▼ ke Nomor Radio. Tekan OK untuk memilih.

Baris teks pertama menampilkan Nomor Radio:.

5 Masukkan ID subscriber, lalu tekan OK untuk melanjutkan.

6 Tekan ▲ atau ▼ ke Penonaktifan Radio.

7 Tekan OK untuk memilih. Salah satu skenario berikut ini akan terjadi:

- Layar menampilkan pemberitahuan mini transisional, yang menunjukkan permintaan sedang diproses. LED akan berkedip hijau.
- Akan muncul layar frase sandi.

  Masukkan frase sandi. Tekan OK untuk melanjutkan.

  - Jika frasa sandi benar, layar menampilkan pemberitahuan mini transisional, yang menunjukkan permintaan sedang diproses. LED hijau akan menyala.
  - Jika frase sandi salah, layar menampilkan pemberitahuan mini negatif, dan Anda akan kembali ke layar sebelumnya.

8 Tunggu respons.

Jika berhasil:

- Nada indikator positif akan berbunyi.

- Layar menampilkan pemberitahuan mini positif.

Jika tidak berhasil:

- Nada indikator negatif akan berbunyi.
- Layar menampilkan pemberitahuan mini negatif.

6.11.20.4

Mengaktifkan Radio

Ikuti prosedur untuk mengaktifkan radio.

1 Tekan tombol **Pengaktifan Radio** yang terprogram.

2 Tekan ▲ atau ▼ ke alias atau ID yang diinginkan.

3 Tekan OK untuk memilih. Salah satu skenario berikut ini akan terjadi:

- Layar menampilkan `Pengaktifan Radio` dan alias atau ID subscriber. LED hijau akan menyala.
- Akan muncul layar frase sandi.

  Masukkan frase sandi. Tekan OK untuk melanjutkan.

  - Jika frasa sandi benar, layar menampilkan pemberitahuan mini transisional, yang menunjukkan permintaan sedang diproses. LED hijau akan menyala.
  - Jika frase sandi salah, layar menampilkan pemberitahuan mini negatif, dan Anda akan kembali ke layar sebelumnya.

4 Tunggu respons.

Jika berhasil:

- Nada indikator positif akan berbunyi.
- Layar menampilkan pemberitahuan mini positif.

Jika tidak berhasil:

- Nada indikator negatif akan berbunyi.
- Layar menampilkan pemberitahuan mini negatif.

6.11.20.5

Mengaktifkan Radio Menggunakan Daftar Kontak

Ikuti prosedur untuk mengaktifkan radio menggunakan daftar Kontak.

1 Tekan OK untuk mengakses menu.

2 Tekan ▲ atau ▼ ke Kontak. Tekan OK untuk memilih.

3 Tekan ▲ atau ▼ ke alias atau ID yang diinginkan. Tekan OK untuk memilih.

4 Tekan ▲ atau ▼ ke Pengaktifan Radio.

5 Tekan OK untuk memilih. Salah satu skenario berikut ini akan terjadi:

- LED akan berkedip hijau.Layar menampilkan Pengaktifan Radio dan alias atau ID subscriber. LED hijau akan menyala.
- Akan muncul layar frase sandi.

  Masukkan frase sandi. Tekan OK untuk melanjutkan.

  - Jika frasa sandi benar, layar menampilkan pemberitahuan mini transisional, yang menunjukkan permintaan sedang diproses. LED hijau akan menyala.
  - Jika frase sandi salah, layar menampilkan pemberitahuan mini negatif, dan Anda akan kembali ke layar sebelumnya.

6 Tunggu respons.

Jika berhasil:

- Nada indikator positif akan berbunyi.
- Layar menampilkan pemberitahuan mini positif.

Jika tidak berhasil:

- Nada indikator negatif akan berbunyi.
- Layar menampilkan pemberitahuan mini negatif.

6.11.20.6

Mengaktifkan Radio Menggunakan Panggilan Manual

Ikuti prosedur untuk mengaktifkan radio menggunakan panggilan manual.

1 Tekan OK untuk mengakses menu.

2 Tekan ▲ atau ▼ ke Kontak. Tekan OK untuk memilih.

3 Tekan ▲ atau ▼ ke Panggilan Manual.

Tekan OK untuk memilih.

4 Tekan ▲ atau ▼ ke Panggilan Pribadi.

Tekan OK untuk memilih.

Baris teks pertama menampilkan Nomor Radio:.

5 Masukkan ID subscriber, lalu tekan OK untuk melanjutkan.

6 Tekan ▲ atau ▼ ke Pengaktifan Radio.

7 Tekan OK untuk memilih. Salah satu skenario berikut ini akan terjadi:

- LED akan berkedip hijau.Layar menampilkan Pengaktifan Radio dan alias atau ID subscriber. LED hijau akan menyala.
- Akan muncul layar frase sandi.

  Masukkan frase sandi. Tekan OK untuk melanjutkan.

  - Jika frasa sandi benar, layar menampilkan pemberitahuan mini transisional, yang menunjukkan permintaan sedang diproses. LED hijau akan menyala.
  - Jika frase sandi salah, layar menampilkan pemberitahuan mini negatif, dan Anda akan kembali ke layar sebelumnya.

8 Tunggu respons.

Jika berhasil:

- Nada indikator positif akan berbunyi.

- Layar menampilkan pemberitahuan mini positif.

Jika tidak berhasil:

- Nada indikator negatif akan berbunyi.
- Layar menampilkan pemberitahuan mini negatif.

6.11.21

Pekerja Terpisah

Fitur ini memicu keadaan darurat yang akan muncul jika tidak ada aktivitas pengguna, seperti penekanan tombol radio atau pemilihan saluran, selama waktu yang ditentukan sebelumnya.

Setelah tidak ada aktivitas pengguna selama durasi terprogram, radio sebelumnya mengingatkan pengguna melalui indikator audio setelah pengatur waktu nonaktif habis.

Jika tetap tidak ada respons oleh pengguna sebelum pengatur waktu pengingat yang ditetapkan sebelumnya habis, radio menginisiasi Alarm Darurat.

Hanya salah satu dari Alarm Darurat berikut ditetapkan pada fitur ini:

- Alarm Darurat
- Alarm Darurat dengan Panggilan
- Alarm Darurat dengan Suara untuk Diikuti

Radio tetap dalam status darurat yang memungkinkan pesan suara untuk dilanjutkan sampai diambil suatu tindakan. Lihat Pengoperasian Darurat di halaman 458 untuk informasi selengkapnya tentang cara keluar dari mode Darurat.

PEMBERITAHUAN:
Fitur ini terbatas pada radio dengan fungsi ini yang diaktifkan.Tanyakan kepada dealer atau administrator sistem Anda untuk informasi selengkapnya.

6.11.22

Bluetooth®

Fitur ini memungkinkan Anda untuk menggunakan radio dengan perangkat (aksesori) Bluetooth melalui sambungan Bluetooth. Radio mendukung perangkat Bluetooth dari Motorola Solutions dan COTS (Commercially available Off-The-Shelf).

Bluetooth beroperasi dalam jarak pandang sejauh 10 m (32 kaki). Ini adalah jalur tanpa hambatan antara radio Anda dan perangkat berkemampuan Bluetooth. Untuk keandalan

tingkat tinggi, Motorola Solutions menyarankan untuk tidak memisahkan radio dan aksesori.

Di area batas penerimaan, kualitas suara dan nada mulai terdengar "samar" atau "terputus-putus". Untuk mengatasi masalah ini, dekatkan posisi radio dan perangkat berkemampuan Bluetooth (dalam jarak 10 m yang telah ditetapkan) untuk menghasilkan kembali penerimaan audio yang jernih. Fungsi Bluetooth di radio mempunyai daya maksimum 2,5 mW (4 dBm) dengan jangkauan 10 m.

Radio dapat mendukung hingga tiga sambungan Bluetooth secara bersamaan dengan perangkat Bluetooth dari jenis yang berbeda. Misalnya, headset, pemindai, perangkat sensor, dan PTT-Only Device (POD).

Lihat panduan pengguna untuk perangkat berkemampuan Bluetooth Anda untuk informasi selengkapnya tentang kapabilitas penuh dari perangkat berkemampuan Bluetooth Anda.

PEMBERITAHUAN:
Jika dinonaktifkan melalui CPS, semua fitur terkait Bluetooth akan dinonaktifkan dan database perangkat Bluetooth dihapus.

6.11.22.1

Mengaktifkan dan Menonaktifkan Bluetooth

Ikuti prosedur untuk mengaktifkan dan menonaktifkan Bluetooth.

1. Tekan OK untuk mengakses menu.
2. Tekan ▲ atau ▼ ke `Bluetooth`. Tekan OK untuk memilih.
3. Tekan ▲ atau ▼ ke `Status Saya`. Tekan OK untuk memilih.

   Layar akan menampilkan `Aktif` dan `Nonaktif`. Status saat ini ditunjukkan oleh ✓.
4. Lakukan salah satu langkah berikut:
   - Tekan ▲ atau ▼ ke `Aktif`. Tekan OK untuk memilih. Layar menampilkan ✓ di sebelah `Aktif`.

- Tekan ▲ atau ▼ ke Nonaktif. Tekan OK untuk memilih. Layar menampilkan ✓ di sebelah Nonaktif.

6.11.22.2

Menghubungkan ke Perangkat Bluetooth

Ikuti prosedur untuk menghubungkan dengan perangkat Bluetooth.

Hidupkan perangkat berkemampuan Bluetooth dan alihkan ke mode pasangan.

1 Tekan OK untuk mengakses menu.

2 Tekan ▲ atau ▼ ke Bluetooth. Tekan OK untuk memilih.

3 Tekan ▲ atau ▼ ke Perangkat. Tekan OK untuk memilih.

4 Lakukan salah satu langkah berikut:

- Tekan ▲ atau ▼ ke perangkat yang diinginkan. Tekan OK untuk memilih.
- Tekan ▲ atau ▼ ke Cari Perangkat untuk mencari perangkat yang tersedia. Tekan ▲ atau ▼ ke perangkat yang diinginkan. Tekan OK untuk memilih.

5 Tekan ▲ atau ▼ ke Hubungkan. Tekan OK untuk memilih.

Perangkat berkemampuan Bluetooth mungkin memerlukan langkah-langkah tambahan untuk menyelesaikan pemasangan. Baca panduan pengguna tentang perangkat berkemampuan Bluetooth.

Layar menampilkan Menyambung ke <Perangkat>.

Tunggu respons.
Jika berhasil:

- Nada indikator positif akan berbunyi.
- Layar menampilkan <Perangkat> Terhubung dan ikon **Bluetooth Terhubung**.

- Layar menampilkan ✓ di sebelah perangkat yang terhubung.

Jika tidak berhasil:

- Nada indikator negatif akan berbunyi.
- Layar menampilkan `Gagal Menghubungkan`.

PEMBERITAHUAN:
Jika memerlukan kode PIN, lihat Mengakses Radio Menggunakan Kata Sandi di halaman 202 .

6.11.22.3

Menghubungkan ke Perangkat Bluetooth dalam Mode Dapat Ditemukan

Ikuti prosedur untuk menyambung ke perangkat Bluetooth dalam mode dapat ditemukan.

Hidupkan perangkat berkemampuan Bluetooth dan alihkan ke mode pasangan.

1 Tekan OK untuk mengakses menu.

2 Tekan ▲ atau ▼ ke `Bluetooth`. Tekan OK untuk memilih.

3 Tekan ▲ atau ▼ ke `Temukan Saya`. Tekan OK untuk memilih. Sekarang radio dapat ditemukan oleh perangkat lain yang berkemampuan Bluetooth selama durasi yang diprogram. Ini disebut Mode Dapat Ditemukan.

Tunggu respons.
Jika berhasil:

- Nada indikator positif akan berbunyi.
- Layar menampilkan `<Perangkat> Terhubung` dan ikon **Bluetooth Terhubung**.
- Layar menampilkan ✓ di sebelah perangkat yang terhubung.

Jika tidak berhasil:

- Nada indikator negatif akan berbunyi.
- Layar menampilkan `Gagal Menghubungkan`.

6.11.22.4

Memutuskan Sambungan dari Perangkat Bluetooth

Ikuti prosedur untuk memutus koneksi dengan perangkat Bluetooth.

1 Tekan OK untuk mengakses menu.

2 Tekan ▲ atau ▼ ke `Bluetooth`. Tekan OK untuk memilih.

3 Tekan ▲ atau ▼ ke `Perangkat`. Tekan OK untuk memilih.

4 Tekan ▲ atau ▼ ke perangkat yang diinginkan. Tekan OK untuk memilih.

5 Tekan ▲ atau ▼ ke `Putuskan Sambungan`.

Tekan OK untuk memilih.

Layar menampilkan `Memutuskan dari <Perangkat>`.

PEMBERITAHUAN:
Perangkat berkemampuan Bluetooth Anda mungkin memerlukan langkah tambahan untuk memutuskan sambungan. Baca panduan pengguna masing-masing untuk perangkat berkemampuan Bluetooth.

Tunggu respons.

- Nada akan berbunyi.
- Layar menampilkan `<Perangkat> Terputus` dan ikon **Bluetooth Terhubung** hilang.
- Ikon ✓ hilang dari sebelah perangkat yang terhubung.

6.11.22.5

Mengalihkan Rute Audio antara Speaker Radio Internal dan Perangkat Bluetooth

Ikuti prosedur untuk mengalihkan rute audio antara speaker internal radio dan perangkat Bluetooth eksternal.

Tekan tombol terprogram **Sakelar Audio Bluetooth**.

Layar menampilkan salah satu hasil berikut ini:

- Nada akan berbunyi. Layar menampilkan `Rutekan Audio ke Radio.`
- Nada akan berbunyi. Layar menampilkan `Rutekan Audio ke Bluetooth.`

6.11.22.6

Melihat Detail Perangkat

Ikuti prosedur untuk melihat detail perangkat di radio.

1 Tekan OK untuk mengakses menu.

2 Tekan ▲ atau ▼ ke `Bluetooth`. Tekan OK untuk memilih.

3 Tekan ▲ atau ▼ ke `Perangkat`. Tekan OK untuk memilih.

4 Tekan ▲ atau ▼ ke perangkat yang diinginkan. Tekan OK untuk memilih.

5 Tekan ▲ atau ▼ ke `Lihat Detail`. Tekan OK untuk memilih.

6.11.22.7

Menghapus Nama Perangkat

Anda dapat menghapus perangkat yang diputus sambungannya dari daftar perangkat berkemampuan Bluetooth.

1 Tekan OK untuk mengakses menu.

2 Tekan ▲ atau ▼ ke `Bluetooth`. Tekan OK untuk memilih.

3 Tekan ▲ atau ▼ ke `Perangkat`. Tekan OK untuk memilih.

4 Tekan ▲ atau ▼ ke perangkat yang diinginkan. Tekan OK untuk memilih.

5 Tekan ▲ atau ▼ ke `Hapus`. Tekan OK untuk memilih. Layar menampilkan `Perangkat Dihapus`.

6.11.22.8

Penguatan Mikrofon Bluetooth

Dengan fitur ini, pengguna dapat mengontrol nilai penguatan mikrofon pada perangkat berkemampuan Bluetooth yang terhubung.

1 Tekan OK untuk mengakses menu.

2 Tekan ▲ atau ▼ ke `Bluetooth`. Tekan OK untuk memilih.

3 Tekan ▲ atau ▼ ke `Penguatan Mik BT`. Tekan OK untuk memilih.

4 Tekan ▲ atau ▼ ke jenis Penguatan Mik BT dan nilai saat ini. Tekan OK untuk memilih. Anda dapat mengedit nilai di sini.

5 Tekan ▲ atau ▼ untuk menambah atau mengurangi nilai. Tekan OK untuk memilih.

6.11.23

Lokasi Dalam Ruangan

PEMBERITAHUAN:
Fitur Lokasi Dalam Ruangan hanya berlaku untuk model dengan perangkat lunak dan perangkat keras terbaru. Tanyakan kepada dealer atau administrator sistem Anda untuk informasi selengkapnya.

Lokasi Dalam Ruangan digunakan untuk terus melacak lokasi pengguna radio. Apabila Lokasi Dalam Ruangan diaktifkan, radio berada dalam mode dapat ditemukan terbatas. Suar terdedikasi digunakan untuk menemukan lokasi radio dan menentukan posisinya.

6.11.23.1

Mengaktifkan atau Menonaktifkan Lokasi Dalam Ruangan

Anda dapat mengaktifkan atau menonaktifkan Lokasi Dalam Ruangan dengan melakukan satu tindakan berikut ini.

- Akses fitur ini melalui menu.

  a. Tekan OK untuk mengakses menu.

  b. Tekan ▲ atau ▼ ke `Bluetooth` dan tekan OK untuk memilih.

  c. Tekan ▲ atau ▼ ke `Lokasi Dalam Ruangan` dan tekan OK untuk memilih.

  d. Tekan OK untuk mengaktifkan Lokasi Dalam Ruangan.

  Layar menampilkan `Lokasi Dalam Ruangan Aktif`. Anda mendengarkan nada indikator positif.
  Salah satu skenario berikut ini akan terjadi.

  - Jika berhasil, ikon Lokasi Dalam Ruangan Tersedia akan muncul di tampilan layar Awal.
  - Jika tidak berhasil, layar menampilkan `Pengaktifan Gagal`. Anda mendengarkan nada indikator negatif.

  e. Tekan OK untuk menonaktifkan Lokasi Dalam Ruangan.

  Layar menampilkan `Lokasi Dalam Ruangan Nonaktif`. Anda mendengarkan nada indikator positif.
  Salah satu skenario berikut ini akan terjadi.

  - Jika berhasil, ikon Lokasi Dalam Ruangan Tersedia akan hilang dari tampilan layar Awal.

- Jika tidak berhasil, layar menampilkan `Penonaktifan Gagal`. Anda mendengarkan nada indikator negatif.

- Akses fitur ini menggunakan tombol terprogram.

  a. Tekan lama tombol **Lokasi Dalam Ruangan** terprogram untuk mengaktifkan Lokasi Dalam Ruangan.

     Layar menampilkan `Lokasi Dalam Ruangan Aktif`. Anda mendengarkan nada indikator positif.
     Salah satu skenario berikut ini akan terjadi.

     - Jika berhasil, ikon Lokasi Dalam Ruangan Tersedia akan muncul di tampilan layar Awal.
     - Jika tidak berhasil, layar menampilkan `Pengaktifan Gagal`. Jika tidak berhasil, Anda akan mendengar nada indikator negatif.

  b. Tekan tombol **Lokasi Dalam Ruangan** terprogram untuk menonaktifkan Lokasi Dalam Ruangan.

     Layar menampilkan `Lokasi Dalam Ruangan Nonaktif`. Anda mendengarkan nada indikator positif.

     Salah satu skenario berikut ini akan terjadi.

     - Jika berhasil, ikon Lokasi Dalam Ruangan Tersedia akan hilang dari tampilan layar Awal.
     - Jika tidak berhasil, layar menampilkan `Penonaktifan Gagal`. Jika tidak berhasil, Anda akan mendengar nada indikator negatif.

6.11.23.2
Mengakses Informasi Suar Lokasi Dalam Ruangan

Ikuti prosedur untuk mengakses informasi suar Lokasi Dalam Ruangan.

1. Tekan [OK] untuk mengakses menu.
2. Tekan [▲] atau [▼] ke `Bluetooth` dan tekan [OK] untuk memilih.
3. Tekan [▲] atau [▼] ke `Lokasi Dalam Ruangan` dan tekan [OK] untuk memilih.

4 Tekan ▲ atau ▼ ke Suar dan tekan OK untuk memilih.

Layar menampilkan informasi suar.

6.11.24

Daftar Notifikasi

Radio Anda dilengkapi daftar Pemberitahuan yang akan mengumpulkan semua aktivitas yang belum dibaca pada saluran, misalnya pesan teks yang belum dibaca, pesan telemetri, panggilan tidak terjawab, dan peringatan panggilan.

Layar menampilkan ikon **Notifikasi** ketika terdapat satu atau lebih kejadian dalam daftar Notifikasi.

Daftar ini mendukung maksimal 40 kejadian tak terbaca. Jika daftar penuh, kejadian selanjutnya menggantikan kejadian paling lama secara otomatis. Setelah dibaca, kejadian dihapus dari daftar Notifikasi.

Untuk aktivitas pesan teks, panggilan tidak terjawab, peringatan panggilan, jumlah maksimum pemberitahuan adalah 30 pesan teks dan 10 panggilan tidak terjawab atau peringatan panggilan. Jumlah maksimum ini akan tergantung pada kemampuan daftar fitur (tiket tugas, pesan teks, atau panggilan tidak terjawab atau peringatan panggilan).

6.11.24.1

Mengakses Daftar Notifikasi

Ikuti prosedur untuk mengakses daftar Notifikasi di radio Anda.

1 Tekan OK untuk mengakses menu.

2 Tekan ▲ atau ▼ ke Notifikasi. Tekan OK untuk memilih.

3 Tekan ▲ atau ▼ ke kejadian yang diperlukan.

Tekan OK untuk memilih.

Tekan lama untuk kembali ke layar Awal.

6.11.25

Sistem Transponder Auto-Range

Sistem Transponder Auto-Range (ARTS) adalah fitur khusus analog yang didesain untuk memberitahu Anda saat radio berada di luar jangkauan radio lain yang dilengkapi dengan ARTS.

Radio yang dilengkapi ARTS mengirim transmisi atau menerima sinyal secara berkala untuk mengonfirmasi bahwa radio berada dalam jangkauan masing-masing.

Radio Anda menunjukkan status sebagai berikut:

Peringatan Pertama Kali

Nada akan berbunyi.

Layar menampilkan alias saluran dan `Dalam Jangkauan`.

Peringatan ARTS di Dalam Jangkauan

Jika diprogram, akan terdengar nada.

Layar menampilkan alias saluran dan `Dalam Jangkauan`.

Peringatan ARTS di Luar Jangkauan

Nada akan berbunyi. LED berwarna merah berkedip dengan cepat.

Layar menampilkan `Di Luar Jangkauan` bergantian dengan Layar utama.

PEMBERITAHUAN:
Tanyakan kepada dealer atau administrator sistem Anda untuk informasi selengkapnya.

6.11.26

Pemrograman Melalui Udara

Dealer dapat memperbarui radio Anda dari jauh melalui Over-the-Air Programming (OTAP) tanpa koneksi fisik apa pun. Selain itu, beberapa pengaturan juga dapat dikonfigurasi menggunakan OTAP.

Ketika radio melakukan OTAP, LED hijau berkedip.

Ketika radio menerima data volume tinggi:

- Layar menampilkan ikon **Data Volume Tinggi**.
- Saluran menjadi sibuk.
- Nada negatif akan berbunyi jika Anda menekan tombol **PTT**.

Setelah OTAP selesai, tergantung pada konfigurasi:

- Nada akan berbunyi. Layar menampilkan `Memulai Ulang Pembaruan`. Radio memulai ulang dengan mati dan menyala lagi.
- Anda dapat memilih `Mulai Ulang Sekarang` atau `Tunda`. Jika Anda memilih `Tunda`, radio kembali ke layar sebelumnya. Layar menampilkan ikon **Pencatat Waktu Penundaan OTAP** sampai mulai ulang otomatis terjadi.

Jika radio menyala setelah mulai ulang otomatis:

- Jika berhasil, layar menampilkan `Pembaruan Perangkat Lunak Selesai.`
- Jika pembaruan program gagal, nada akan berbunyi, LED merah berkedip sekali, dan layar menampilkan `Sw Update Failed (Pembaruan Perangkat Lunak Gagal).`

PEMBERITAHUAN:
Jika pembaruan pemrograman gagal, tanda kegagalan pembaruan perangkat lunak akan muncul setiap kali Anda menyalakan radio. Hubungi dealer Anda untuk memprogram ulang radio dengan perangkat lunak terbaru demi menghindari kemunculan tanda kegagalan pembaruan perangkat lunak.

Lihat Memeriksa Informasi Pembaruan Perangkat Lunak di halaman 241 untuk perangkat lunak versi terbaru.

6.11.27

Penghambat Transmisi

Fitur Penghambat Transmisi memungkinkan pengguna memblokir semua transmisi dari radio.

PEMBERITAHUAN:
Fitur Bluetooth dan Wi-Fi tersedia dalam mode Penghambat Transmisi.

6.11.27.1

Mengaktifkan Penghambat Transmisi

Ikuti prosedur untuk mengaktifkan Penghambat Transmisi.

Lakukan salah satu tindakan berikut:

- Tekan ▲ atau ▼ ke `Penghambat Tx` dan tekan OK untuk memilih.
- Tekan tombol **Penghambat Transmisi** yang dapat diprogram.

- Nada indikator positif akan berbunyi.

- Layar menampilkan `Penghambat Tx Aktif`.

PEMBERITAHUAN:
Status Penghambat Transmisi tidak berubah setelah radio menyala.

6.11.27.2

Menonaktifkan Penghambat Transmisi

Ikuti prosedur untuk menonaktifkan Penghambat Transmisi.

Lakukan salah satu tindakan berikut:

- Tekan ▲ atau ▼ ke `Penghambat Tx` dan tekan OK untuk memilih.
- Tekan tombol **Penghambat Transmisi** yang dapat diprogram.

- Nada indikator negatif akan berbunyi. Transmisi kembali ke operasi normal.
- Layar menampilkan `Penghambat Tx Nonaktif`.

6.11.28

Memilih Mode Koneksi Periferal Pihak Ketiga

Ikuti prosedur untuk memilih salah satu mode koneksi periferal pihak ketiga berikut:

- Motorola Solutions
- PC dan Audio
- Aksesori Data
- Telemetri
- Generik

1. Tekan OK untuk mengakses menu.
2. Tekan ▲ atau ▼ ke `Utilitas`. Tekan OK untuk memilih.
3. Tekan ▲ atau ▼ ke `Pengaturan Radio`. Tekan OK untuk memilih.

4 Tekan ▲ atau ▼ ke `Jenis Kabel`. Tekan OK untuk memilih.

5 Tekan ▲ atau ▼ ke mode koneksi yang diinginkan. Tekan OK untuk memilih.

Layar akan menampilkan mode koneksi yang dipilih. Layar kembali ke menu sebelumnya.

6.11.29

Indikator Kekuatan Sinyal Penerimaan

Dengan fitur ini, Anda dapat melihat nilai Indikator Kekuatan Sinyal Diterima (RSSI).

Layar menampilkan ikon **RSSI** di sudut kanan atas. Lihat Ikon Layar untuk informasi selengkapnya tentang ikon **RSSI**.

6.11.29.1

Melihat Nilai RSSI

Pasang Mikrofon Keypad Navigasi 4 Arah (nomor komponen Motorola Solutions RMN5127_) ke radio Anda.

Pada layar awal, menggunakan Mikrofon Keypad Navigasi 4 Arah, tekan ◀ tiga kali dan segera tekan ▶ tiga kali.

Layar menampilkan nilai RSSI yang sekarang.

Untuk kembali ke layar awal, tekan dan tahan ⌂ .

6.11.30

Kunci Kata Sandi

Anda dapat mengatur kata sandi untuk membatasi akses ke radio. Setiap kali Anda menyalakan radio, Anda diminta untuk memasukkan kata sandi.

Radio Anda mendukung input kata sandi 4-digit.

Anda juga dapat menggunakan mikrofon keypad untuk memasukkan kata sandi.

Radio Anda tidak dapat menerima panggilan dalam status terkunci.

6.11.30.1

Mengakses Radio Menggunakan Kata Sandi

Nyalakan radio Anda.

1 Masukkan kata sandi empat digit.

   a Gunakan mikrofon keypad.

   b Untuk mengedit nilai numerik tiap digit, tekan ▲ atau ▼. Untuk memasukkan dan berpindah ke digit selanjutnya, tekan OK.

   PEMBERITAHUAN:
   Penggunaan sakelar kaki **Darurat** akan membatalkan masukan kata sandi untuk mengakses radio.

2 Tekan OK untuk mengonfirmasi kata sandi.

Jika Anda memasukkan kata sandi dengan benar, radio akan menyala.

Jika Anda memasukkan kata sandi yang salah setelah percobaan pertama dan kedua, radio akan menampilkan indikasi sebagai berikut:

- Nada tak terputus akan berbunyi.
- Layar menampilkan `Kata Sandi Salah`.

Ulangi langkah 1.

Jika Anda memasukkan kata sandi yang salah setelah percobaan ketiga, radio akan menampilkan indikasi berikut:

- Nada akan berbunyi.
- LED kuning berkedip ganda.
- Layar menampilkan `Kata sandi Salah` lalu, `Radio Terkunci`.
- Radio masuk ke status terkunci selama 15 menit.

PEMBERITAHUAN:
Dalam keadaan terkunci, radio merespons masukan dari **Kenop Aktif/Nonaktif/Kontrol Volume** dan tombol **Lampu Latar** terprogram saja.

Tunggu selama 15 menit hingga pengatur waktu status penguncian berakhir, lalu ulangi langkah 1.

PEMBERITAHUAN:
Jika Anda mematikan dan menyalakan lagi radio, pengatur waktu 15 menit akan dimulai ulang.

6.11.30.2

Membuka Kunci Radio dalam Status Terkunci

Radio Anda tidak dapat menerima panggilan dalam status terkunci. Ikuti prosedur untuk membuka kunci radio dalam status terkunci.

Lakukan salah satu langkah berikut:

- Jika radio dihidupkan, tunggu hingga 15 menit, lalu ulangi langkah-langkah tersebut dalam Mengakses Radio Menggunakan Kata Sandi di halaman 202 untuk mengakses radio.
- Jika radio dimatikan, nyalakan radio. Radio memulai ulang pencatat waktu 15 menit untuk status terkunci. Nada akan berbunyi. LED kuning berkedip ganda. Layar menampilkan `Radio Terkunci.`

  Tunggu selama 15 menit, lalu ulangi langkah-langkah tersebut dalam Mengakses Radio Menggunakan Kata Sandi di halaman 202 untuk mengakses radio.

6.11.30.3

Mengaktifkan atau Menonaktifkan Kunci Kata Sandi

Ikuti prosedur untuk mengaktifkan atau menonaktifkan kunci kata sandi di radio Anda.

1. Tekan OK untuk mengakses menu.
2. Tekan ▲ atau ▼ ke `Utilitas`. Tekan OK untuk memilih.
3. Tekan ▲ atau ▼ ke `Pengaturan Radio`.

   Tekan OK untuk memilih.
4. Tekan ▲ atau ▼ ke `Kunci Kata Sandi`.

   Tekan OK untuk memilih.
5. Masukkan kata sandi empat digit yang Anda gunakan saat ini.
   - Gunakan mikrofon keypad.

- Tekan ▲ atau ▼ untuk mengedit nilai numerik setiap digit, lalu tekan OK untuk memasukkan dan berpindah ke digit selanjutnya. Nada indikator positif akan terdengar untuk setiap digit yang ditekan.

6 Tekan OK untuk memasukkan kata sandi.

Jika kata sandi salah, layar menampilkan `Kata Sandi Salah` dan otomatis kembali ke menu sebelumnya.

7 Lakukan salah satu langkah berikut:

- Tekan ▲ atau ▼ ke `Aktifkan`. Tekan OK untuk memilih.
  Layar akan menampilkan ✓ di sebelah `Nyala`.
- Tekan ▲ atau ▼ ke `Nonaktifkan`. Tekan OK untuk memilih.
  Layar akan menampilkan ✓ di sebelah `Mati`.

6.11.30.4

Mengganti Kata Sandi

Ikuti prosedur untuk mengganti kata sandi di radio Anda.

1 Tekan OK untuk mengakses menu.

2 Tekan ▲ atau ▼ ke `Utilitas`. Tekan OK untuk memilih.

3 Tekan ▲ atau ▼ ke `Pengaturan Radio`.

Tekan OK untuk memilih.

4 Tekan ▲ atau ▼ ke `Kunci Kata Sandi`.

Tekan OK untuk memilih.

5 Masukkan kata sandi empat digit saat ini, lalu tekan OK untuk melanjutkan.

Jika kata sandi salah, layar menampilkan `Kata Sandi Salah`, dan otomatis kembali ke menu sebelumnya.

6 Tekan atau ke Ubah Kata Sandi.
Tekan untuk memilih.

7 Masukkan kata sandi empat digit baru, lalu tekan untuk melanjutkan.

8 Masukkan kembali kata sandi empat digit baru, lalu tekan untuk melanjutkan.
Jika berhasil, layar menampilkan Kata Sandi Diubah.
Jika tidak berhasil, layar menampilkan Kata Sandi Tidak Cocok.
Layar kembali ke menu sebelumnya secara otomatis.

6.11.31

Konfigurasi Panel Depan

Anda dapat mengatur parameter fitur tertentu pada Konfigurasi Panel Depan (FPC) untuk meningkatkan penggunaan radio.

6.11.31.1

Masuk ke Mode Konfigurasi Panel Depan

Untuk kembali ke layar Awal, tekan lama kapan saja.

1 Tekan untuk mengakses menu.

2 Tekan atau ke Utilitas. Tekan untuk memilih.

3 Tekan atau ke Program Radio. Tekan untuk memilih.

6.11.31.2

Mengedit Parameter Mode FPP

Gunakan tombol berikut ini sesuai kebutuhan ketika menelusuri parameter fitur.

- , – Gulir di antara opsi, naikkan/turunkan nilai, atau telusuri secara vertikal.

- OK – Pilih opsi atau masuk ke sub-menu.
- – Tekan sebentar untuk kembali ke menu sebelumnya atau keluar dari layar pilihan. Tekan lama untuk kembali ke layar Awal.

6.11.32

Pengoperasian Wi-Fi

Fitur ini memungkinkan Anda mengatur dan terhubung ke jaringan Wi-Fi. Wi-Fi mendukung pembaruan untuk firmware, codeplug, dan sumber daya radio seperti paket bahasa dan pengumuman suara.

PEMBERITAHUAN:
Fitur ini hanya berlaku untuk XiR M8668i/CM7668i saja.

Wi-Fi® adalah merek dagang terdaftar dari Wi-Fi Alliance®.

Radio Anda mendukung WEP/WPA/WPA2-Personal dan jaringan Wi-Fi WPA/WPA2-Enterprise.

Jaringan Wi-Fi WEP/WPA/WPA2-Personal

Menggunakan autentikasi berbasis kunci (kata sandi) yang dibagikan sebelumnya.

Kunci yang dibagikan sebelumnya bisa dimasukkan menggunakan menu atau CPS/RM.

Jaringan Wi-Fi WPA/WPA2-Enterprise

Menggunakan autentikasi berbasis sertifikat.

Radio Anda harus dikonfigurasikan terlebih dahulu dengan sertifikat.

PEMBERITAHUAN:
Tanyakan kepada dealer atau administrator sistem Anda untuk terhubung ke jaringan Wi-Fi WPA/WPA2-Enterprise.

Tombol terprogram **Wi-Fi Aktif atau Nonaktif** dialokasikan oleh dealer atau administrator sistem Anda. Tanyakan kepada dealer atau administrator sistem Anda untuk mengetahui bagaimana radio Anda diprogram.

Pengumuman Suara untuk tombol terprogram **Wi-Fi Aktif atau Nonaktif** dapat disesuaikan melalui CPS sesuai dengan kebutuhan pengguna. Tanyakan kepada dealer

atau administrator sistem Anda untuk informasi selengkapnya.

PEMBERITAHUAN:
Anda dapat mengaktifkan atau menonaktifkan Wi-Fi dari jarak jauh menggunakan radio yang ditentukan (lihat Mengaktifkan atau Menonaktifkan Wi-Fi dari Jarak Jauh Menggunakan Radio Khusus (Kontrol Individu) di halaman 211 dan Mengaktifkan atau Menonaktifkan Wi-Fi dari Jarak Jauh Menggunakan Radio Khusus (Kontrol Grup) di halaman 212). Tanyakan kepada dealer atau administrator sistem Anda untuk informasi selengkapnya.

6.11.32.1

Mengaktifkan atau Menonaktifkan Wi-Fi

1 Tekan tombol **Wi-Fi Aktif atau Nonaktif** terprogram. Pengumuman Suara berbunyi ketika Wi-Fi Diaktifkan atau Wi-Fi Dinonaktifkan.

2 Akses fitur ini menggunakan menu.

a Tekan OK untuk mengakses menu.

b Tekan ▲ atau ▼ ke `WiFi` dan tekan OK untuk memilih.

c Tekan ▲ atau ▼ ke `WiFi Aktif` dan tekan OK untuk memilih.

d Tekan OK untuk mengaktifkan/menonaktifkan Wi-Fi.

Jika Wi-Fi diaktifkan, layar akan menampilkan ✓ di sebelah `Diaktifkan`.

Jika Wi-Fi dinonaktifkan, ✓ hilang dari sebelah `Diaktifkan`.

6.11.32.2

Mengaktifkan atau Menonaktifkan Wi-Fi dari Jarak Jauh Menggunakan Radio Khusus (Kontrol Individu)

Anda dapat mengaktifkan atau menonaktifkan Wi-Fi dari jarak jauh di Kontrol Individu (Satu ke Satu).

PEMBERITAHUAN:
Hanya radio dengan pengaturan CPS khusus yang mendukung fungsi ini, tanyakan kepada dealer atau administrator sistem Anda untuk informasi lebih lanjut.

1. Lakukan salah satu langkah berikut:
   - Tekan lama tombol yang dapat diprogram. Gunakan keypad untuk memasukkan ID, dan tekan OK untuk memilih. Lanjutkan ke langkah 3.
   - Tekan OK untuk mengakses menu.
2. Tekan ▲ atau ▼ ke `Kontak` dan tekan OK untuk memilih.
3. Tekan ▲ atau ▼ ke `Kontrol WiFi` dan tekan OK untuk memilih.
4. Tekan ▲ atau ▼ untuk memilih `Nyala` atau `Mati`.
5. Tekan OK untuk memilih.

Jika berhasil, layar menampilkan pemberitahuan mini positif.

Jika gagal, layar menampilkan pemberitahuan mini negatif.

6.11.32.3

Mengaktifkan atau Menonaktifkan Wi-Fi dari Jarak Jauh Menggunakan Radio Khusus (Kontrol Grup)

Anda dapat mengaktifkan atau menonaktifkan Wi-Fi dari jarak jauh di Kontrol Grup (Satu ke Banyak).

PEMBERITAHUAN:
Hanya radio dengan pengaturan CPS khusus yang mendukung fungsi ini, tanyakan kepada dealer atau administrator sistem Anda untuk informasi lebih lanjut.

1. Tekan OK untuk mengakses menu.
2. Tekan ▲ atau ▼ ke `Kontak` dan tekan OK untuk memilih.
3. Tekan ▲ atau ▼ untuk memilih alias atau ID subscriber yang diinginkan.
4. Tekan ▲ atau ▼ ke `Kontrol WiFi` dan tekan OK untuk memilih.
5. Tekan ▲ atau ▼ untuk memilih `Nyala` atau `Mati`.
6. Tekan OK untuk memilih.

Jika berhasil, layar menampilkan `Berhasil Dikirim`.

Jika gagal, layar menampilkan pemberitahuan mini negatif.

6.11.32.4

Menghubungkan ke Titik Akses Jaringan

Ketika Wi-Fi diaktifkan, radio memindai dan menghubungkan ke titik akses jaringan.

PEMBERITAHUAN:
Anda juga dapat menghubungkan ke titik akses jaringan menggunakan menu.

Titik akses jaringan Wi-Fi WPA-Enterprise telah dikonfigurasikan sebelumnya. Tanyakan kepada dealer atau administrator sistem Anda untuk mengetahui bagaimana radio Anda diprogram.

1 Tekan OK untuk mengakses menu.

2 Tekan ▲ atau ▼ ke WiFi dan tekan OK untuk memilih.

3 Tekan ▲ atau ▼ ke Jaringan dan tekan OK untuk memilih.

4 Tekan ▲ atau ▼ ke titik akses jaringan dan tekan OK untuk memilih.

PEMBERITAHUAN:
Untuk Wi-Fi WPA-Enterprise, jika titik akses jaringan tidak dikonfigurasikan sebelumnya, opsi Hubungkan tidak tersedia.

5 Tekan ▲ atau ▼ ke Hubungkan dan tekan OK untuk memilih.

6 Untuk Wi-Fi WPA-Personal, masukkan kata sandi dan tekan OK .

7 Untuk Wi-Fi WPA-Enterprise, kata sandi dikonfigurasikan dengan RM.

Jika kata sandi yang dikonfigurasikan sebelumnya benar, radio Anda otomatis akan terhubung ke titik akses jaringan yang dipilih.

Jika kata sandi yang dikonfigurasikan sebelumnya salah, layar menampilkan `Autentikasi Gagal`, dan otomatis kembali ke menu sebelumnya.

Jika berhasil terhubung, radio menampilkan pemberitahuan dan titik akses jaringan disimpan ke dalam daftar profil.

Jika tidak berhasil terhubung, radio menampilkan layar pemberitahuan kegagalan sesaat dan otomatis kembali ke menu sebelumnya.

6.11.32.5

Memeriksa Status Koneksi Wi-Fi

Tekan tombol terprogram **Permintaan Status Wi-Fi** untuk mengetahui status koneksi menggunakan Pengumuman Suara. Pengumuman Suara berbunyi ketika Wi-Fi Dinonaktifkan, Wi-Fi Diaktifkan, tetapi tidak untuk Tidak Ada Koneksi atau Wi-Fi Aktif dengan Koneksi.

- Layar menampilkan `WiFi Nonaktif` saat Wi-Fi nonaktif.
- Layar menampilkan `WiFi Aktif, Tersambung` saat radio tersambung ke jaringan.
- Layar menampilkan `WiFi Aktif, Terputus` saat Wi-Fi aktif tetapi radio tidak tersambung ke jaringan.

Pengumuman Suara untuk hasil kueri status Wi-Fi dapat dikustomisasi lewat CPS sesuai dengan kebutuhan pengguna. Tanyakan kepada dealer atau administrator sistem Anda untuk informasi selengkapnya.

PEMBERITAHUAN:
Tombol terprogram **Kueri Status Wi-Fi** dialokasikan oleh dealer atau administrator sistem Anda. Tanyakan kepada dealer atau administrator sistem Anda untuk mengetahui bagaimana radio Anda diprogram.

6.11.32.6

Menyegarkan Daftar Jaringan

- Lakukan tindakan berikut ini untuk menyegarkan daftar jaringan melalui menu.

  a. Tekan OK untuk mengakses menu.

  b. Tekan ▲ atau ▼ ke `WiFi` dan tekan OK untuk memilih.

c. Tekan ▲ atau ▼ ke Jaringan dan tekan OK untuk memilih.

Ketika Anda masuk ke menu Jaringan, radio menyegarkan daftar jaringan secara otomatis.

- Jika Anda sudah berada di menu Jaringan, lakukan tindakan berikut ini untuk menyegarkan daftar jaringan.

  Tekan ▲ atau ▼ ke Segarkan dan tekan OK untuk memilih.

  Radio akan menyegarkan dan menampilkan daftar jaringan terbaru.

6.11.32.7

Menambahkan Jaringan

PEMBERITAHUAN:
Tugas ini tidak bisa diterapkan ke jaringan Wi-Fi WPA-Enterprise.

Jika jaringan yang dipilih tidak terdapat dalam daftar jaringan tersedia, lakukan tindakan berikut ini untuk menambahkan jaringan.

1. Tekan OK untuk mengakses menu.
2. Tekan ▲ atau ▼ ke WiFi dan tekan OK untuk memilih.
3. Tekan ▲ atau ▼ ke Jaringan dan tekan OK untuk memilih.
4. Tekan ▲ atau ▼ ke Tambah Jaringan dan tekan OK untuk memilih.
5. Masukkan Service Set Identifier (SSID) dan tekan OK .
6. Tekan ▲ atau ▼ ke Buka dan tekan OK untuk memilih.

7 Masukkan kata sandi dan tekan OK .

Radio menampilkan pemberitahuan mini positif untuk menunjukkan bahwa jaringan berhasil disimpan.

6.11.32.8

Melihat Detail Titik Akses Jaringan

Anda bisa melihat detail titik akses jaringan.

1 Tekan OK untuk mengakses menu.

2 Tekan atau ke WiFi dan tekan OK untuk memilih.

3 Tekan atau ke Jaringan dan tekan OK untuk memilih.

4 Tekan atau ke titik akses jaringan dan tekan OK untuk memilih.

5 Tekan atau ke Lihat Detail dan tekan OK untuk memilih.

PEMBERITAHUAN:
Wi-Fi WPA-Personal dan WPA-Enterprise menampilkan detail yang berbeda atas Titik Akses Jaringan.

Wi-Fi WPA-Personal

Untuk titik akses jaringan yang terhubung, radio Anda menampilkan Service Set Identifier (SSID), Security Mode, alamat Media Access Control (MAC), dan alamat Internet Protocol (IP).

Untuk titik akses jaringan yang tidak terhubung, radio Anda menampilkan SSID dan Security Mode.

Wi-Fi WPA-Enterprise

Untuk titik akses jaringan yang terhubung, radio Anda menampilkan SSID, Security Mode, Identity, Extended Authentication Protocol (EAP) Method, Phase 2 Authentication, Cert Name, alamat MAC, alamat IP, Gateway, DNS1, dan DNS2.

Untuk titik akses jaringan yang tidak terhubung, radio Anda menampilkan SSID, Security Mode, Identity, EAP Method, Phase 2 Authentication, dan Cert Name.

6.11.32.9

Menghapus Titik Akses Jaringan

PEMBERITAHUAN:
Tugas ini tidak bisa diterapkan ke jaringan Wi-Fi Enterprise.

Lakukan tindakan berikut ini untuk menghapus titik akses jaringan dari daftar profil.

1. Tekan OK untuk mengakses menu.
2. Tekan atau ke WiFi dan tekan OK untuk memilih.
3. Tekan atau ke Jaringan dan tekan OK untuk memilih.
4. Tekan atau ke titik akses jaringan yang dipilih dan tekan OK untuk memilih.
5. Tekan atau ke Hapus dan tekan OK untuk memilih.
6. Tekan atau ke Ya dan tekan OK untuk memilih.

   Radio menampilkan pemberitahuan mini positif untuk menunjukkan bahwa titik akses jaringan yang dipilih berhasil dihapus.

6.12

Utilitas

Bab ini menjelaskan pengoperasian fungsi utilitas yang terdapat di radio Anda.

6.12.1

Tingkat Redaman

Anda bisa menyesuaikan tingkat redaman untuk menyaring panggilan yang tidak diinginkan dengan kekuatan sinyal rendah atau saluran dengan derau latar belakang lebih tinggi dari normal.

Normal

Ini adalah pengaturan default.

Ketat

Pengaturan ini menyaring panggilan dan/atau derau latar belakang yang tidak diinginkan. Panggilan dari lokasi jauh mungkin juga ikut tersaring.

PEMBERITAHUAN:
Fitur ini tidak tersedia dalam saluran Citizens Band yang berada dalam frekuensi yang sama.

6.12.1.1

Mengatur Tingkat Redaman

Ikuti prosedur untuk mengatur tingkat redaman di radio Anda.

1 Lakukan salah satu langkah berikut:

- Tekan tombol **Redaman Gangguan** terprogram. Lompati langkah-langkah berikut ini.
- Tekan OK untuk mengakses menu.

2 Tekan atau ke Utilitas. Tekan OK untuk memilih.

3 Tekan atau ke Pengaturan Radio. Tekan OK untuk memilih.

4 Tekan atau ke Redaman. Tekan OK untuk memilih.

5 Lakukan salah satu langkah berikut:

- Tekan atau ke Normal. Tekan OK untuk memilih.
  Layar menampilkan ✓ di sebelah Normal.
- Tekan atau ke Ketat. Tekan OK untuk memilih.
  Layar menampilkan ✓ di sebelah Ketat.

Layar kembali ke menu sebelumnya secara otomatis.

6.12.2

Tingkat Daya

Anda dapat mengatur setelan daya ke tinggi atau rendah untuk setiap saluran.

Tinggi
Setelan tinggi memungkinkan komunikasi dengan pengguna radio yang berada dalam jarak cukup jauh dari Anda.

Rendah
Setelan rendah memungkinkan komunikasi dengan radio yang terletak dalam jarak dekat.

PEMBERITAHUAN:
Fitur ini tidak tersedia dalam saluran Citizens Band yang berada dalam frekuensi yang sama.

6.12.2.1

Mengatur Tingkat Daya

Ikuti prosedur untuk mengatur tingkat daya di radio Anda.

1 Lakukan salah satu langkah berikut:
- Tekan tombol terprogram **Tingkat Daya**. Lompati langkah-langkah di bawah ini.
- Tekan OK untuk mengakses menu.

2 Tekan ▲ atau ▼ ke `Utilitas`. Tekan OK untuk memilih.

3 Tekan ▲ atau ▼ ke `Pengaturan Radio`. Tekan OK untuk memilih.

4 Tekan ▲ atau ▼ ke `Daya`. Tekan OK untuk memilih.

5 Lakukan salah satu langkah berikut:
- Tekan ▲ atau ▼ ke `Tinggi`. Tekan OK untuk memilih.
  Layar menampilkan ✓ di sebelah `Tinggi`.
- Tekan ▲ atau ▼ ke `Rendah`. Tekan OK untuk memilih.
  Layar menampilkan ✓ di sebelah `Rendah`.

6 Tekan lama untuk kembali ke layar Awal.

6.12.3

Mengaktifkan atau Menonaktifkan Nada/Peringatan Radio

Anda dapat mengaktifkan dan menonaktifkan semua nada dan peringatan radio, jika diperlukan, kecuali untuk nada peringatan Darurat yang masuk Ikuti prosedur untuk mengaktifkan atau menonaktifkan nada dan peringatan di radio Anda.

1 Lakukan salah satu langkah berikut:
- Tekan tombol **Nada/Peringatan** yang terprogram. Lompati langkah-langkah berikut ini.
- Tekan OK untuk mengakses menu.

2 Tekan ▲ atau ▼ ke `Utilitas`. Tekan OK untuk memilih.

3 Tekan ▲ atau ▼ ke `Pengaturan Radio`. Tekan OK untuk memilih.

4 Tekan ▲ atau ▼ ke `Nada/Peringatan`. Tekan OK untuk memilih.

5 Tekan ▲ atau ▼ ke `Semua Nada`. Tekan OK untuk memilih.

6 Tekan OK untuk mengaktifkan atau menonaktifkan semua nada dan peringatan. Layar menampilkan salah satu hasil berikut ini:
- Jika diaktifkan, ✓ muncul di sebelah `Diaktifkan`.
- Jika dinonaktifkan, ✓ hilang dari sebelah `Diaktifkan`.

6.12.4

Mengaktifkan atau Menonaktifkan Nada Keypad

Ikuti prosedur untuk mengaktifkan atau menonaktifkan nada keypad di radio Anda.

1 Tekan OK untuk mengakses menu.

2 Tekan ▲ atau ▼ ke Utilitas.Tekan OK untuk memilih.

3 Tekan ▲ atau ▼ ke Pengaturan Radio.Tekan OK untuk memilih.

4 Tekan ▲ atau ▼ ke Nada/Peringatan. Tekan OK untuk memilih.

5 Tekan ▲ atau ▼ ke Nada Keypad. Tekan OK untuk memilih.

6 Tekan OK untuk mengaktifkan atau menonaktifkan nada keypad. Layar menampilkan salah satu hasil berikut ini:

- Jika diaktifkan, ✓ muncul di sebelah Diaktifkan.
- Jika dinonaktifkan, ✓ hilang dari sebelah Diaktifkan.

6.12.5

Mengatur Tingkat Offset Volume Nada/Peringatan

Fitur ini menyesuaikan volume nada atau peringatan agar dapat lebih tinggi atau lebih rendah dibandingkan volume suara. Ikuti prosedur untuk mengatur tingkat offset volume nada dan peringatan di radio Anda.

1 Tekan OK untuk mengakses menu.

2 Tekan ▲ atau ▼ ke Utilitas. Tekan OK untuk memilih.

3 Tekan ▲ atau ▼ ke Pengaturan Radio. Tekan OK untuk memilih.

4 Tekan ▲ atau ▼ ke Nada/Peringatan. Tekan OK untuk memilih.

5 Tekan ▲ atau ▼ ke Offset Vol.. Tekan OK untuk memilih.

6 Tekan ▲ atau ▼ ke tingkat offset volume yang diinginkan.

Nada umpan balik akan berbunyi bersama setiap tingkat offset volume yang berhubungan.

7 Lakukan salah satu langkah berikut:

- Tekan OK untuk memilih. Level offset volume yang diperlukan telah disimpan.
- Tekan untuk keluar. Perubahan dibuang.

6.12.6

Mengaktifkan atau Menonaktifkan Nada Izin Bicara

Ikuti prosedur untuk mengaktifkan atau menonaktifkan Nada Izin Bicara di radio Anda.

1 Tekan OK untuk mengakses menu.

2 Tekan ▲ atau ▼ ke `Utilitas`. Tekan OK untuk memilih.

3 Tekan ▲ atau ▼ ke `Pengaturan Radio`.

Tekan OK untuk memilih.

4 Tekan ▲ atau ▼ ke `Nada/Peringatan`.

Tekan OK untuk memilih.

5 Tekan ▲ atau ▼ ke `Izin Bicara`. Tekan OK untuk memilih.

6 Tekan OK untuk mengaktifkan atau menonaktifkan Nada Izin Bicara.

Layar menampilkan salah satu hasil berikut ini:

- Jika diaktifkan, ✓ muncul di sebelah `Diaktifkan`.
- Jika dinonaktifkan, ✓ hilang dari sebelah `Diaktifkan`.

6.12.7

Mengaktifkan atau Menonaktifkan Nada Penyalaan

Ikuti prosedur untuk mengaktifkan atau menonaktifkan Nada Penyalaan di radio Anda.

1 Tekan OK untuk mengakses menu.

2 Tekan ▲ atau ▼ ke Utilitas. Tekan OK untuk memilih.

3 Tekan ▲ atau ▼ ke Pengaturan Radio.
Tekan OK untuk memilih.

4 Tekan ▲ atau ▼ ke Nada/Peringatan.
Tekan OK untuk memilih.

5 Tekan ▲ atau ▼ ke Penyalaan. Tekan OK untuk memilih.

6 Tekan OK untuk mengaktifkan atau menonaktifkan Nada Penyalaan. Layar menampilkan salah satu hasil berikut ini:

- Jika diaktifkan, ✓ muncul di sebelah Diaktifkan.
- Jika dinonaktifkan, ✓ hilang dari sebelah Diaktifkan.

6.12.8

Mengatur Nada Peringatan Pesan Teks

Anda dapat mengatur nada peringatan pesan teks ke Sesaat atau Berulang untuk tiap entri dalam daftar Kontak. Ikuti prosedur untuk mengatur nada peringatan pesan teks di radio Anda.

1 Tekan OK untuk mengakses menu.

2 Tekan ▲ atau ▼ ke Kontak. Tekan OK untuk memilih.

3 Tekan ▲ atau ▼ ke alias atau ID yang diinginkan. Tekan OK untuk memilih.

4 Tekan ▲ atau ▼ ke `Peringatan Pesan`. Tekan OK untuk memilih.

5 Lakukan salah satu langkah berikut:

- Tekan ▲ atau ▼ ke `Sementara`. Tekan OK untuk memilih.
  Layar menampilkan ✓ di sebelah `Sementara`.
- Tekan ▲ atau ▼ ke `Berulang`. Tekan OK untuk memilih.
  Layar menampilkan ✓ di sebelah `Berulang`.

6.12.9

Mengubah Mode Layar

Anda dapat mengubah mode layar radio antara Siang atau Malam, sesuai kebutuhan. Fitur ini memengaruhi palet warna pada layar. Ikuti prosedur untuk mengubah mode layar radio.

1 Lakukan salah satu langkah berikut:

- Tekan tombol **Mode Tampilan** terprogram. Lompati langkah-langkah berikut ini.
- Tekan OK untuk mengakses menu.

2 Tekan ▲ atau ▼ ke `Utilitas`. Tekan OK untuk memilih.

3 Tekan ▲ atau ▼ ke `Pengaturan Radio`. Tekan OK untuk memilih.

4 Tekan ▲ atau ▼ ke `Tampilan`. Tekan OK untuk memilih.

Layar menampilkan `Mode Siang` dan `Mode Malam`.

5 Tekan ▲ atau ▼ ke pengaturan yang diinginkan. Tekan OK untuk memilih.

Layar menampilkan ✓ di sebelah pengaturan yang dipilih.

6.12.10

Mengatur Kecerahan Layar

Ikuti prosedur untuk mengatur kecerahan layar di radio Anda. Kecerahan layar tidak dapat disesuaikan bila Kecerahan Otomatis diaktifkan.

1 Lakukan salah satu langkah berikut:

- Tekan tombol **Kecerahan** terprogram. Lompati langkah-langkah berikut ini.
- Tekan OK untuk mengakses menu.

2 Tekan ▲ atau ▼ ke `Utilitas`. Tekan OK untuk memilih.

3 Tekan ▲ atau ▼ ke `Pengaturan Radio`. Tekan OK untuk memilih.

4 Tekan ▲ atau ▼ ke `Kecerahan`. Tekan OK untuk memilih.

Layar menampilkan bilah kemajuan.

5 Tekan ▲ atau ▼ untuk mengurangi atau menambah kecerahan layar. Tekan OK untuk memilih.

Nilai pengaturan bervariasi, mulai dari 1 sampai 8.

6.12.11

Mengaktifkan atau Menonaktifkan Klakson/Lampu

Radio dapat memberi tahu Anda bila ada panggilan masuk melalui fitur klakson dan lampu. Jika diaktifkan, panggilan masuk akan membunyikan klakson dan menyalakan lampu kendaraan. Fitur ini harus dipasang melalui konektor aksesori belakang pada radio oleh dealer. Ikuti prosedur

untuk mengaktifkan atau menonaktifkan klakson dan lampu pada radio Anda.

1 Lakukan salah satu langkah berikut:

- Tekan tombol **Klakson/Lampu** yang telah diprogram. Lompati langkah-langkah di bawah ini.
- Tekan OK untuk mengakses menu.

2 Tekan ▲ atau ▼ ke `Utilitas`.Tekan OK untuk memilih.

3 Tekan ▲ atau ▼ ke `Pengaturan Radio`.Tekan OK untuk memilih.

4 Tekan ▲ atau ▼ ke `Klakson/Lampu`. Tekan OK untuk memilih.

5 Tekan OK untuk mengaktifkan atau menonaktifkan Klakson/Lampu. Layar menampilkan salah satu hasil berikut ini:

- Jika diaktifkan, ✔ muncul di sebelah `Diaktifkan`.
- Jika dinonaktifkan, ✔ hilang dari sebelah `Diaktifkan`.

6.12.12

Mengaktifkan atau Menonaktifkan Indikator LED

Ikuti prosedur untuk mengaktifkan atau menonaktifkan indikator LED di radio Anda.

1 Tekan OK untuk mengakses menu.

2 Tekan ▲ atau ▼ ke `Utilitas`. Tekan OK untuk memilih.

3 Tekan ▲ atau ▼ ke `Pengaturan Radio`. Tekan OK untuk memilih.

4 Tekan ▲ atau ▼ ke `Indikator LED`. Tekan OK untuk memilih.

5 Tekan OK untuk mengaktifkan atau menonaktifkan Indikator LED.

Layar menampilkan salah satu hasil berikut ini:

- Jika diaktifkan, ✓ muncul di sebelah Diaktifkan.
- Jika dinonaktifkan, ✓ hilang dari sebelah Diaktifkan.

6.12.13

Mengaktifkan atau Menonaktifkan Sistem Public Address

Ikuti prosedur untuk mengaktifkan atau menonaktifkan sistem public address (PA) internal radio Anda.

1 Lakukan salah satu langkah berikut:

- Tekan tombol **Public Address** yang diprogram. Lompati langkah-langkah berikut ini.
- Tekan OK untuk mengakses menu.

2 Tekan ▲ atau ▼ ke Utilitas. Tekan OK untuk memilih.

3 Tekan ▲ atau ▼ ke Pengaturan Radio. Tekan OK untuk memilih.

4 Tekan ▲ atau ▼ ke Public Address. Tekan OK untuk memilih.

5 Tekan OK untuk mengaktifkan atau menonaktifkan Public Address.

- Jika diaktifkan, ✓ muncul di sebelah Diaktifkan.
- Jika dinonaktifkan, ✓ hilang dari sebelah Diaktifkan.

6.12.14

Mengaktifkan atau Menonaktifkan Sistem Public Address Eksternal

Ikuti prosedur untuk mengaktifkan atau menonaktifkan sistem public address (PA) eksternal radio Anda.

1 Lakukan salah satu langkah berikut:
   - Tekan tombol **Public Address Ekst** yang diprogram. Lompati langkah-langkah berikut ini.
   - Tekan OK untuk mengakses menu.

2 Tekan ▲ atau ▼ ke `Utilitas`. Tekan OK untuk memilih.

3 Tekan ▲ atau ▼ ke `Pengaturan Radio`. Tekan OK untuk memilih.

4 Tekan ▲ atau ▼ ke `Public Address Eksternal`. Tekan OK untuk memilih.

5 Tekan OK untuk mengaktifkan atau menonaktifkan public address eksternal.
   - Jika diaktifkan, ✔ muncul di sebelah `Diaktifkan`.
   - Jika dinonaktifkan, ✔ hilang dari sebelah `Diaktifkan`.

6.12.15

Mengaktifkan atau Menonaktifkan Layar Pengantar

Anda bisa mengaktifkan dan menonaktifkan Layar Pengantar dengan mengikuti prosedur ini.

1 Tekan OK untuk mengakses menu.

2 Tekan ▲ atau ▼ ke `Utilitas`. Tekan OK untuk memilih.

3 Tekan ▲ atau ▼ ke `Pengaturan Radio`. Tekan OK untuk memilih.

4 Tekan ▲ atau ▼ ke Tampilan. Tekan OK untuk memilih.

5 Tekan ▲ atau ▼ ke Layar Pengantar.

Tekan OK untuk memilih.

6 Tekan OK untuk mengaktifkan atau menonaktifkan Layar Pengantar.

Layar menampilkan salah satu hasil berikut ini:

- Jika diaktifkan, ✓ muncul di sebelah Diaktifkan.
- Jika dinonaktifkan, ✓ hilang dari sebelah Diaktifkan.

6.12.16

Mengatur Bahasa

Ikuti prosedur untuk mengatur bahasa di radio Anda.

1 Tekan OK untuk mengakses menu.

2 Tekan ▲ atau ▼ ke Utilitas. Tekan OK untuk memilih.

3 Tekan ▲ atau ▼ ke Pengaturan Radio.Tekan OK untuk memilih.

4 Tekan ▲ atau ▼ ke Bahasa. Tekan OK untuk memilih.

5 Tekan ▲ atau ▼ ke bahasa yang diinginkan.

Tekan OK untuk memilih.

Layar menampilkan ✓ di sebelah bahasa yang dipilih.

6.12.17

Mengidentifikasi Jenis Kabel

Lakukan langkah berikut untuk memilih jenis kabel yang digunakan pada radio Anda.

1. Tekan OK untuk mengakses menu.
2. Tekan ▲ atau ▼ ke `Utilitas`. Tekan OK untuk memilih.
3. Tekan ▲ atau ▼ ke `Pengaturan Radio`. Tekan OK untuk memilih.
4. Tekan ▲ atau ▼ ke `Jenis Kabel`. Tekan OK untuk memilih.
5. Jenis kabel saat ini akan ditandai dengan ✓.

6.12.18

Transmisi Pengoperasian Suara

Transmisi Pengoperasian Suara (VOX) memungkinkan Anda memulai panggilan yang diaktifkan suara tanpa perlu memegang perangkat di saluran terprogram. Radio secara otomatis mengirim transmisi, untuk periode terprogram, apabila mikrofon pada aksesori yang berkemampuan VOX mendeteksi suara.

PEMBERITAHUAN:
Fitur ini tidak tersedia dalam saluran Citizens Band yang berada dalam frekuensi yang sama.

Anda dapat mengaktifkan atau menonaktifkan VOX dengan melakukan salah satu dari hal-hal berikut ini:

- Matikan radio, lalu nyalakan kembali untuk mengaktifkan VOX.
- Ganti saluran menggunakan tombol **Gulir Naik/Turun** untuk mengaktifkan VOX.
- Ganti saluran menggunakan **Kenop Volume/ Saluran**untuk mengaktifkan VOX.
- Aktifkan atau nonaktifkan VOX melalui tombol **VOX** yang diprogram atau menu untuk mengaktifkan VOX.

- Tekan tombol **PTT** selama pengoperasian radio untuk menonaktifkan VOX.

PEMBERITAHUAN:
Menghidupkan atau mematikan fitur ini terbatas pada radio yang menghidupkan fitur ini. Tanyakan kepada dealer atau administrator sistem Anda untuk informasi selengkapnya.

6.12.18.1

Mengaktifkan atau Menonaktifkan Transmisi Pengoperasian Suara

Ikuti prosedur untuk mengaktifkan atau menonaktifkan VOX di radio Anda.

1 Lakukan salah satu langkah berikut:
   - Tekan tombol terprogram **VOX**. Lompati langkah-langkah di bawah ini.
   - Tekan OK untuk mengakses menu.

2 Tekan ▲ atau ▼ ke `Utilitas`. Tekan OK untuk memilih.

3 Tekan ▲ atau ▼ ke `Pengaturan Radio`. Tekan OK untuk memilih.

4 Tekan ▲ atau ▼ ke `VOX`. Tekan OK untuk memilih.

5 Tekan OK untuk mengaktifkan atau menonaktifkan **VOX**.

PEMBERITAHUAN:
Jika fitur Nada Izin Bicara diaktifkan, gunakan kata pemicu untuk memulai panggilan. Tunggu Nada Izin Bicara selesai sebelum berbicara dengan jelas di mikrofon. Lihat Mengaktifkan atau Menonaktifkan Nada Izin Bicara di halaman 223 untuk informasi selengkapnya.

6.12.19

Mengaktifkan atau Menonaktifkan Pengumuman Suara

Dengan fitur ini, radio dapat memberikan pesan suara tentang zona atau saluran yang telah ditetapkan oleh

pengguna atau tombol yang dapat diprogram yang ditekan oleh pengguna.

Ini biasanya berguna ketika pengguna kesulitan untuk membaca konten yang ditampilkan di layar.

Indikator audio dapat diatur sesuai kebutuhan pelanggan. Ikuti prosedur untuk mengaktifkan atau menonaktifkan Pengumuman Suara di radio Anda.

6.12.20

Mengaktifkan atau Menonaktifkan Papan Opsi

Kemampuan papan opsi dalam setiap saluran dapat dialokasikan ke tombol yang dapat diprogram. Sebuah saluran dapat mendukung hingga 6 fitur papan opsi. Ikuti prosedur untuk mengaktifkan atau menonaktifkan papan opsi di radio Anda.

Tekan tombol **Papan Opsi** yang terprogram.

6.12.21

Teks ke Ucapan

Fitur Teks ke Ucapan hanya dapat diaktifkan oleh dealer Anda. Jika Teks ke Ucapan diaktifkan, fitur Pengumuman Suara dinonaktifkan secara otomatis. Jika Pengumuman Suara diaktifkan, fitur Teks ke Ucapan dinonaktifkan secara otomatis.

Fitur ini membuat radio dapat mengindikasikan fitur-fitur berikut ini melalui suara:

- Saluran Saat Ini
- Zona Saat Ini
- Fitur tombol terprogram aktif atau nonaktif
- Konten dari pesan teks yang diterima
- Konten dari Tiket Tugas yang diterima

Indikator audio dapat dikustomisasi menurut keperluan subscriber. Fitur ini biasanya berguna ketika pengguna kesulitan untuk membaca informasi yang ditampilkan di layar.

6.12.21.1

Mengatur Teks ke Ucapan

Ikuti prosedur untuk mengatur fitur Teks ke Ucapan.

1 Tekan OK untuk mengakses menu.

2 Tekan ▲ atau ▼ ke Utilitas. Tekan OK untuk memilih.

3 Tekan ▲ atau ▼ ke Pengaturan Radio.

Tekan OK untuk memilih.

4 Tekan ▲ atau ▼ ke Pengumuman Suara.

Tekan OK untuk memilih.

5 Tekan ▲ atau ▼ ke salah satu fitur berikut.

Tekan OK untuk memilih.

Fitur yang tersedia adalah sebagai berikut:

- Semua
- Pesan
- Tiket Tugas
- Saluran
- Zona
- Tombol Program

✓ muncul di sebelah pengaturan yang dipilih.

6.12.22

Mengaktifkan atau Menonaktifkan Penerusan Panggilan Otomatis

Anda dapat mengaktifkan radio Anda agar secara otomatis meneruskan panggilan suara ke radio lain.

1 Tekan OK untuk mengakses menu.

2 Tekan ▲ atau ▼ ke Utilitas. Tekan OK untuk memilih.

3 Tekan ▲ atau ▼ ke Pengaturan Radio.

Tekan OK untuk memilih.

4 Tekan ▲ atau ▼ ke Penerusan Panggilan.

Tekan OK untuk memilih.

5 Lakukan salah satu langkah berikut:

- Tekan ▲ atau ▼ untuk mengaktifkan Penerusan Panggilan. Jika diaktifkan, ✓ muncul di sebelah `Diaktifkan`.
- Tekan ▲ atau ▼ untuk menonaktifkan Penerusan Panggilan. Jika dinonaktifkan, ✓ hilang dari sebelah `Diaktifkan`.

6.12.23

Mengatur Pencatat Waktu Menu

Anda dapat mengatur lama waktu radio Anda berada di menu sebelum otomatis beralih ke layar Awal. Ikuti prosedur untuk mengatur pencatat waktu menu.

1 Tekan OK untuk mengakses menu.

2 Tekan ▲ atau ▼ ke `Utilitas`. Tekan OK untuk memilih.

3 Tekan ▲ atau ▼ ke `Pengaturan Radio`. Tekan OK untuk memilih.

4 Tekan ▲ atau ▼ ke `Tampilan`. Tekan OK untuk memilih.

5 Tekan ▲ atau ▼ ke `Pencatat Waktu Menu`. Tekan OK untuk memilih.

6 Tekan ▲ atau ▼ ke pengaturan yang diinginkan. Tekan OK untuk memilih.

6.12.24

Mengaktifkan atau Menonaktifkan AGC Mikrofon Analog

Automatic Gain Control (AGC) Mikrofon Analog mengontrol gain mikrofon pada radio secara otomatis ketika melakukan transmisi pada sistem analog.
Fitur ini menekan audio yang keras atau mempertegas audio yang halus ke nilai yang telah ditetapkan untuk

menghasilkan tingkat audio yang konsisten. Ikuti prosedur untuk mengaktifkan atau menonaktifkan AGC Mikrofon Analog di radio Anda.

1 Tekan OK untuk mengakses menu.

2 Tekan ▲ atau ▼ ke Utilitas. Tekan OK untuk memilih.

3 Tekan ▲ atau ▼ ke Pengaturan Radio.

Tekan OK untuk memilih.

4 Tekan ▲ atau ▼ ke Mic AGC-A. Tekan OK untuk memilih.

5 Tekan OK untuk mengaktifkan atau menonaktifkan AGC Mikrofon Analog.

Layar menampilkan salah satu hasil berikut ini:

- Jika diaktifkan, ✓ muncul di sebelah Diaktifkan.
- Jika dinonaktifkan, ✓ hilang dari sebelah Diaktifkan.

6.12.25

Mengaktifkan atau Menonaktifkan AGC Mikrofon Digital

Automatic Gain Control (AGC) Mikrofon Digital mengontrol gain mikrofon pada radio secara otomatis ketika melakukan transmisi pada sistem digital.
Fitur ini menekan audio yang keras atau mempertegas audio yang halus ke nilai yang telah ditetapkan untuk menghasilkan tingkat audio yang konsisten. Ikuti prosedur untuk mengaktifkan atau menonaktifkan AGC Mikrofon Digital di radio Anda.

1 Tekan OK untuk mengakses menu.

2 Tekan ▲ atau ▼ ke Utilitas. Tekan OK untuk memilih.

3 Tekan ▲ atau ▼ ke `Pengaturan Radio`.

Tekan OK untuk memilih.

4 Tekan ▲ atau ▼ ke `Mic AGC-D`. Tekan OK untuk memilih.

5 Tekan OK untuk mengaktifkan atau menonaktifkan AGC Mikrofon Digital.

Layar menampilkan salah satu hasil berikut ini:

- Jika diaktifkan, ✓ muncul di sebelah `Diaktifkan`.
- Jika dinonaktifkan, ✓ hilang dari sebelah `Diaktifkan`.

6.12.26

Mengaktifkan atau Menonaktifkan Audio Cerdas

Radio akan menyesuaikan volume audio secara otomatis untuk mengatasi derau latar belakang yang ada di lingkungan, termasuk sumber derau stasioner maupun non-stasioner. Ini adalah fitur hanya-terima dan tidak memengaruhi audio transmisi. Ikuti prosedur untuk mengaktifkan atau menonaktifkan Audio Cerdas di radio Anda.

PEMBERITAHUAN:
Fitur ini tidak tersedia saat sesi Bluetooth berlangsung.

1 Lakukan salah satu langkah berikut:

- Tekan tombol **Audio Cerdas** yang telah diprogram. Lompati langkah-langkah di bawah ini.
- Tekan OK untuk mengakses menu.

2 Tekan ▲ atau ▼ ke `Utilitas`. Tekan OK untuk memilih.

3 Tekan ▲ atau ▼ ke `Pengaturan Radio`.

Tekan OK untuk memilih.

4 Tekan ▲ atau ▼ ke Audio Cerdas. Tekan OK untuk memilih.

5 Lakukan salah satu langkah berikut:

- Tekan ▲ atau ▼ ke Aktif. Tekan OK untuk memilih. Layar menampilkan ✓ di sebelah Aktif.
- Tekan ▲ atau ▼ ke Nonaktif. Tekan OK untuk memilih. Layar menampilkan ✓ di sebelah Nonaktif.

6.12.27

Mengaktifkan atau Menonaktifkan Fitur Peredam Umpan Balik Akustik

Dengan fitur ini Anda dapat meminimalkan Peredam Umpan Balik Akustik di panggilan yang diterima. Ikuti prosedur untuk mengaktifkan atau menonaktifkan Peredam Umpan Balik Akustik pada radio Anda.

1 Tekan OK untuk mengakses menu.

2 Tekan ▲ atau ▼ ke Utilitas. Tekan OK untuk memilih..

3 Tekan ▲ atau ▼ ke Pengaturan Radio. Tekan OK untuk memilih.

4 Tekan ▲ atau ▼ ke Peredam AF. Tekan OK untuk memilih.

5 Lakukan salah satu langkah berikut:

- Tekan untuk mengaktifkan Peredam Umpan Balik Akustik. Jika diaktifkan, ✓ muncul di sebelah Diaktifkan.
- Tekan untuk menonaktifkan Peredam Umpan Balik Akustik. Jika dinonaktifkan, ✓ hilang dari sebelah Diaktifkan.

6.12.28

Mengaktifkan atau Menonaktifkan Peningkatan Trill

Anda dapat mengaktifkan fitur ini jika berbicara dalam bahasa yang memiliki banyak kata dengan bunyi getar ("R"). Ikuti prosedur untuk mengaktifkan atau menonaktifkan Peningkatan Trill di radio Anda.

1 Lakukan salah satu langkah berikut:

- Tekan tombol **Peningkatan Trill** terprogram. Lompati langkah-langkah di bawah ini.
- Tekan OK untuk mengakses menu.

2 Tekan ▲ atau ▼ ke `Utilitas`. Tekan OK untuk memilih.

3 Tekan ▲ atau ▼ ke `Pengaturan Radio`. Tekan OK untuk memilih.

4 Tekan ▲ atau ▼ ke `Peningkatan Trill`. Tekan OK untuk memilih.

5 Lakukan salah satu langkah berikut:

- Tekan ▲ atau ▼ ke `Aktif`. Tekan OK untuk memilih. Layar menampilkan ✓ di sebelah `Aktif`.
- Tekan ▲ atau ▼ ke `Nonaktif`. Tekan OK untuk memilih. Layar menampilkan ✓ di sebelah `Nonaktif`.

6.12.29

Ambien Audio

Anda dapat mengatur ambien audio sesuai dengan keadaan di sekitar.

Default

Ini adalah pengaturan default.

Keras

Pengaturan ini mengaktifkan Peredam Derau dan meningkatkan kekerasan speaker untuk penggunaan di lingkungan yang bising.

Grup Kerja

Pengaturan ini mengaktifkan Peredam AF dan menonaktifkan AGC ketika digunakan di dekat beberapa radio lain.

6.12.29.1

Mengatur Ambien Audio

Ikuti prosedur untuk mengatur ambien audio di radio Anda sesuai dengan lingkungan.

1 Tekan OK untuk mengakses menu.

2 Tekan ▲ atau ▼ ke `Utilitas`. Tekan OK untuk memilih.

3 Tekan ▲ atau ▼ ke `Pengaturan Radio`. Tekan OK untuk memilih.

4 Tekan ▲ atau ▼ ke `Ambien Audio`. Tekan OK untuk memilih.

5 Tekan ▲ atau ▼ ke pengaturan yang diinginkan. Tekan OK untuk memilih.

Pengaturannya adalah sebagai berikut.

- Pilih `Default` untuk pengaturan pabrik default.
- Pilih `Keras` untuk meningkatkan kekerasan volume speaker saat digunakan di lingkungan sekitar yang bising.
- Pilih `Grup Kerja` untuk mengurangi umpan balik akustik saat digunakan dengan sekelompok radio yang saling berdekatan.

Layar menampilkan ✓ di sebelah pengaturan yang dipilih.

6.12.30

Profil Audio

Anda dapat mengatur profil audio untuk radio sesuai dengan preferensi Anda.

Default
Ini adalah pengaturan default.

Tingkat 1, Tingkat 2, dan Tingkat 3
Pengaturan ini dimaksudkan sebagai kompensasi atas hilangnya pendengaran akibat derau yang lazim pada usia 40-an, 50-an, dan 60-an atau lebih.

Treble Boost, Mid Boost, dan Bass Boost
Pengaturan ini dimaksudkan untuk menghasilkan suara lebih kecil, suara lebih sengau, dan suara lebih dalam.

6.12.30.1

Mengatur Profil Audio

Ikuti prosedur untuk menentukan profil audio default di radio Anda.

1 Tekan OK untuk mengakses menu.

2 Tekan ▲ atau ▼ ke `Utilitas`. Tekan OK untuk memilih.

3 Tekan ▲ atau ▼ ke `Pengaturan Radio`. Tekan OK untuk memilih.

4 Tekan ▲ atau ▼ ke `Profil Audio`. Tekan OK untuk memilih.

5 Tekan ▲ atau ▼ ke pengaturan yang diinginkan. Tekan OK untuk memilih.

Pengaturannya adalah sebagai berikut.

- Pilih `Default` untuk menonaktifkan profil audio yang dipilih sebelumnya dan kembali ke pengaturan pabrik default.
- Pilih `Level 1`, `Level 2`, atau `Level 3` untuk profil audio yang ditujukan untuk mengompensasi berkurangnya daya dengar akibat kebisingan yang lazim ditemui pada orang dewasa berusia di atas 40 tahun.
- Pilih `Treble Boost`, `Mid Boost`, atau `Bass Boost` untuk profil audio yang selaras dengan preferensi Anda untuk suara yang lebih tipis, sengau, atau dalam.

Layar menampilkan ✓ di sebelah pengaturan yang dipilih.

6.12.31

Mengaktifkan atau Menonaktifkan Global Navigation Satellite System

Global Navigation Satellite System (GNSS) adalah sistem navigasi satelit yang menentukan lokasi radio dengan tepat. GNSS mencakup Global Positioning System (GPS) dan BeiDou Navigation Satellite System (BDS).

PEMBERITAHUAN:
Model radio tertentu mungkin menawarkan GPS dan BDS. Konstelasi GNSS dikonfigurasikan menggunakan CPS. Tanyakan kepada dealer atau administrator sistem Anda untuk mengetahui bagaimana radio Anda diprogram.

1

2 Lakukan salah satu langkah berikut untuk mengaktifkan atau menonaktifkan GNSS di radio.

- Tekan tombol **GNSS** terprogram.
- Tekan OK untuk mengakses menu. Lanjutkan ke langkah berikutnya.

3 Tekan ▲ atau ▼ ke `Utilitas`. Tekan OK untuk memilih.

4 Tekan ▲ atau ▼ ke `Pengaturan Radio`. Tekan OK untuk memilih.

5 Tekan ▲ atau ▼ ke `GNSS`. Tekan OK untuk memilih.

6 Tekan OK untuk mengaktifkan atau menonaktifkan GNSS.

Jika diaktifkan, ✓ muncul di sebelah `Diaktifkan`. Jika dinonaktifkan, ✓ hilang dari sebelah `Diaktifkan`.

6.12.32

Daftar Terima Fleksibel

Daftar Terima Fleksibel adalah fitur yang memungkinkan Anda membuat dan mengalokasikan anggota pada daftar terima grup bicara. Radio Anda bisa mendukung maksimal

16 anggota di daftar tersebut. Fitur ini tidak didukung dalam Capacity Plus.

6.12.32.1

Mengaktifkan atau Menonaktifkan Daftar Terima Fleksibel

Ikuti prosedur untuk mengaktifkan atau menonaktifkan Daftar Terima Fleksibel.

1 Lakukan salah satu langkah berikut:
   - Tekan tombol **Daftar Terima Fleksibel** terprogram. Lompati langkah-langkah berikut ini.
   - Tekan OK untuk mengakses menu.

2 Tekan atau ke `Daftar Rx Fleksibel`.
   Tekan OK untuk memilih.

3 Lakukan salah satu langkah berikut:
   - Tekan atau ke `Aktifkan`. Tekan OK untuk memilih.
     Nada indikator positif akan berbunyi.
     Layar menampilkan pemberitahuan mini positif.
   - Tekan atau ke `Nonaktifkan`. Tekan OK untuk memilih.
     Nada indikator negatif akan berbunyi.
     Layar menampilkan pemberitahuan mini negatif.

6.12.33

Informasi Umum Radio

Radio Anda memuat informasi tentang berbagai parameter umum.

Informasi umum radio Anda adalah sebagai berikut:

- Alias dan ID radio.
- Versi Firmware dan Codeplug.
- Pembaruan perangkat lunak.
- Informasi GNSS.

- Informasi site.

PEMBERITAHUAN:

Tekan untuk kembali ke layar sebelumnya.

Tekan lama untuk kembali ke layar Awal. Radio keluar dari layar saat ini setelah pencatat waktu nonaktif berakhir.

6.12.33.1

Memeriksa Alias dan ID Radio

1 Lakukan salah satu langkah berikut:

- Tekan tombol **Alias dan ID Radio** yang telah diprogram. Lompati langkah-langkah berikut ini. Nada indikator positif akan berbunyi.

  Anda juga dapat menekan tombol **Alias dan ID Radio** yang terprogram untuk kembali ke layar sebelumnya.

- Tekan OK untuk mengakses menu.

2 Tekan atau ke `Utilitas`. Tekan OK untuk memilih.

3 Tekan atau ke `Info Radio`. Tekan OK untuk memilih.

4 Tekan atau ke `ID Saya`. Tekan OK untuk memilih.

Baris teks pertama menunjukkan alias radio. Baris teks kedua menampilkan ID radio.

6.12.33.2

Memeriksa Versi Firmware dan Codeplug

1 Tekan OK untuk mengakses menu.

2 Tekan atau ke `Utilitas`. Tekan OK untuk memilih.

3 Tekan atau ke `Info Radio`. Tekan OK untuk memilih.

4 Tekan ▲ atau ▼ ke `Versi`. Tekan OK untuk memilih.

Layar menampilkan versi firmware dan codeplug yang sekarang.

6.12.33.3

Memeriksa Informasi Pembaruan Perangkat Lunak

Fitur ini menampilkan tanggal dan waktu pembaruan perangkat lunak terakhir yang dilakukan melalui OTAP atau Wi-Fi. Ikuti prosedur untuk memeriksa informasi pembaruan perangkat lunak pada radio Anda.

1 Tekan OK untuk mengakses menu.

2 Tekan ▲ atau ▼ ke `Utilitas`. Tekan OK untuk memilih.

3 Tekan ▲ atau ▼ ke `Info Radio`. Tekan OK untuk memilih.

4 Tekan ▲ atau ▼ ke `Pembaruan Perangkat Lunak`. Tekan OK untuk memilih.

Layar menampilkan tanggal dan waktu pembaruan perangkat lunak terbaru.

Menu Pembaruan Perangkat Lunak hanya tersedia setelah setidaknya satu sesi OTAP atau Wi-Fi yang berhasil. Lihat Pemrograman Melalui Udara di halaman 517 untuk informasi selengkapnya.

6.12.33.4

Memeriksa Informasi GNSS

Menampilkan informasi GNSS di radio, misalnya nilai:

- Garis Lintang
- Garis Bujur
- Ketinggian
- Arah
- Kecepatan
- HDOP (Penipisan Ketepatan secara Horizontal)
- Satelit

- Versi

1 Tekan OK untuk mengakses menu.

2 Tekan ▲ atau ▼ ke `Utilitas`. Tekan OK untuk memilih.

3 Tekan ▲ atau ▼ ke `Info Radio`. Tekan OK untuk memilih.

4 Tekan ▲ atau ▼ ke `Info GNSS`. Tekan OK untuk memilih.

5 Tekan ▲ atau ▼ ke item yang diperlukan.

Tekan OK untuk memilih. Informasi GNSS yang diminta akan ditampilkan di layar.

6.12.33.5

Menampilkan Informasi Site

Ikuti prosedur untuk menampilkan nama site tempat radio Anda berada saat ini.

1 Tekan OK untuk mengakses menu.

2 Tekan ▲ atau ▼ ke `Utilitas`. Tekan OK untuk memilih.

3 Tekan ▲ atau ▼ ke `Info Radio`. Tekan OK untuk memilih.

4 Tekan ▲ atau ▼ ke `Info Site`. Tekan OK untuk memilih.

Nama site saat ini akan ditampilkan di layar.

6.12.34

Melihat Detail Sertifikat Wi-Fi Enterprise

Anda bisa melihat detail Sertifikat Wi-Fi Enterprise terpilih.

1 Tekan OK untuk mengakses menu.

2 Tekan ▲ atau ▼ ke `Utilitas`.Tekan OK untuk memilih.

3 Tekan ▲ atau ▼ ke `Menu Sertifikat`.

Tekan OK untuk memilih.

✓ tampak di samping sertifikat yang siap.

4 Tekan ▲ atau ▼ ke sertifikat yang diinginkan.

Tekan OK untuk memilih.

Radio Anda menampilkan detail lengkap dari sertifikat.

PEMBERITAHUAN:
Untuk sertifikat yang belum siap, layar hanya menampilkan Status.

Daftar Aksesori Resmi

Motorola Solutions menyediakan daftar aksesori untuk meningkatkan produktivitas radio Anda.

Tabel 17 :Antena

Nomor Komponen	Deskripsi
HAE6017_	Kombinasi GNSS (GPS/Galileo/QZSS/GLONASS), UHF, 403–527 MHz, Penguatan 2.0 dB, Pemasangan Dengan Pin, BNC
HAE6018_	Kombinasi GPS/UHF 470–527 MHz, Gelombang 1/4, Pemasangan dengan Pin, BNC
HAE6021_	UHF, 403–527 MHz, Penguatan 2,0 dB, Pemasangan dengan Pin, BNC
HAE6023_	Kombinasi GPS/UHF, 494–512 MHz, Penguatan 3,0 dB, Pemasangan dengan Pin, BNC
HAE6025_	Kombinasi GPS/UHF, 470–494 MHz, Penguatan 3,0 dB, Pemasangan dengan Pin, BNC
HAF4013_	800/900, 806-941 MHz, Batang Pendek, Pemasangan dengan Pin, Mini U
HAF4025_	800/900, 806-941 MHz, Gelombang 1/4, Pemasangan dengan Pin, Mini U
HAF4026_	800/900, 806-941 MHz, Penguatan 3 dB, Pemasangan dengan Pin, Mini U
HAF4027_	800/900, 806–941 MHz, Penguatan 5,0 dB, Pemasangan dengan Pin, Mini-U
HAF4029_	Kombinasi GPS+RF, 806–941 MHz, Gelombang 1/4, Pemasangan dengan Pin, Mini-U
HAF4030_	Kombinasi GPS+RF, 806–941 MHz, Penguatan 3,0 dB, Pemasangan dengan Pin, Mini-U

Nomor Komponen	Deskripsi
HAF4032_	Kombinasi GPS+RF, 806–941 MHz, Penguatan 5,0 dB, Pemasangan dengan Pin, Mini-U
HAF4033_	Kombinasi GPS+RF, 806–941 MHz, Penguatan 5,0 dB, Pemasangan dengan Pin, Mini-U
PMAD4140_	UHF, 300–340 MHz, 1/4 Gelombang, Pemasangan Dengan Pin, BNC
PMAD4102_	Kombinasi GPS/GNSS/UHF, 350–400 MHz, Gelombang 1/4, Pemasangan dengan Pin, BNC
PMAD4107_	UHF, 350–400 MHz, 1/4 Gelombang, Pemasangan Dengan Pin, BNC
PMAD4141_	UHF, 320–360 MHz, 1/4 Gelombang, Pemasangan Dengan Pin, BNC
PMAD4142_	Kombinasi GNSS (GPS/Galileo/QZSS/GLONASS), UHF, 300–340 MHz, 1/4 Gelombang, Pemasangan Dengan Pin, BNC
PMAD4143_	Kombinasi GNSS (GPS/Galileo/QZSS/GLONASS), UHF, 320–360 MHz, 1/4 Gelombang, Pemasangan Dengan Pin, BNC
PMAE4035_	Kombinasi GNSS (GPS/Galileo/QZSS/GLONASS), UHF, 403–430 MHz, 1/4 Gelombang, Pemasangan Dengan Pin, BNC
PMAE4036_	Kombinasi GNSS (GPS/Galileo/QZSS/GLONASS), UHF, 406–420 MHz, Penguatan 3.5 dB, Pemasangan Dengan Pin, BNC
PMAE4037_	Kombinasi GNSS (GPS/Galileo/QZSS/GLONASS), UHF, 450–470 MHz, 1/4 Gelombang, Pemasangan Dengan Pin, BNC
PMAE4038_	Kombinasi GNSS (GPS/Galileo/QZSS/GLONASS), UHF, 450–470

Nomor Komponen	Deskripsi
	MHz, Penguatan 5 dB, Pemasangan Dengan Pin, BNC
PMAN4000_	Antena Aktif GPS dengan Dudukan Tetap
PMAN4001_	Antena Aktif GPS dengan Dudukan Jendela
PMAN4002_	Antena Aktif GPS dengan Dudukan Magnet
PMAN4003_	Kombinasi GNSS (GPS/Galileo/ QZSS/BeiDou-2), NMO Mount Base, BNC
RAD4198_	VHF, 136–144 MHz, Gelombang 1/4, Pemasangan dengan Pin, BNC
RAD4199_	VHF, 146–150,8 MHz, Gelombang 1/4, Pemasangan dengan Pin, BNC
RAD4200_	VHF, 150,8–162 MHz, Gelombang 1/4, Pemasangan dengan Pin, BNC
RAD4201_	VHF, 162–174 MHz, Gelombang 1/4, Pemasangan dengan Pin, BNC

Nomor Komponen	Deskripsi
RAD4219_	Kombinasi GNSS (GPS/Galileo/ QZSS/GLONASS), VHF, 136–144 MHz, 1/4 Gelombang, Pemasangan Dengan Pin, BNC
RAD4220_	Kombinasi GNSS (GPS/Galileo/ QZSS/GLONASS), VHF, 146–150,8 MHz, 1/4 Gelombang, Pemasangan Dengan Pin, BNC
RAD4221_	Kombinasi GNSS (GPS/Galileo/ QZSS/GLONASS), VHF, 150,8–162 MHz, 1/4 Gelombang, Pemasangan Dengan Pin, BNC
RAD4222_	Kombinasi GNSS (GPS/Galileo/ QZSS/GLONASS), VHF, 162–174 MHz, 1/4 Gelombang, Pemasangan Dengan Pin, BNC
RAE4151_	UHF, 403–430 MHz, 1/4 Gelombang, Pemasangan Dengan Pin, BNC

Nomor Komponen	Deskripsi
RAE4152_	UHF, 450–470 MHz, 1/4 Gelombang, Pemasangan Dengan Pin, BNC
RAE4154_	UHF, 450–470 MHz, Penguatan 5,0 dB, Pemasangan dengan Pin, BNC
RAE4158_	UHF, 406–420 MHz, Penguatan 3,5 dB, Pemasangan dengan Pin, BNC

Tabel 18 :Antena ntuk digunakan dengan dudukan PMAN4003_ saja

Nomor Komponen	Deskripsi
HAE6027_	UHF, 494 –512 MHz, Penguatan 3,0 dB, Pemasangan dengan Pin
HAE6028_	UHF, 470 –494 MHz, Penguatan 3,0 dB, Pemasangan dengan Pin
HAE6029_[14]	UHF, 403 –527 MHz, Penguatan 2,0 dB, Pemasangan dengan Pin
HAE6030_	UHF, 470–527 MHz, Gelombang 1/4, Pemasangan Dengan Pin
PMAE4039_	UHF, 403–430 MHz, Gelombang 1/4
PMAE4041_	UHF, 450–470 MHz, Gelombang 1/4
PMAE4040_	UHF, 406–420 MHz, Penguatan 3,5 dB
PMAE4042_	UHF, 450–470 MHz, Penguatan 3,5 dB
PMAE4043_	UHF, 450–470 MHz, Penguatan 5,0 dB
RAD4223_	VHF, 162–174 MHz, Gelombang 1/4
RAD4224_	VHF, 150,8–162 MHz, Gelombang 1/4
RAD4225_	VHF, 146–150,8 MHz, Gelombang 1/4

[14] Digunakan dengan dudukan antena standar

Nomor Komponen	Deskripsi
RAD4226_	VHF, 136–144 MHz, Gelombang 1/4
RAD4227_	VHF, 146–172 MHz, Penguatan 3,0 dB

Tabel 19 :Aksesori Audio

Nomor Komponen	Deskripsi
89409N	Headset Bluetooth HK200 dengan Steker AS
ASMHK200VP-GB2A	Headset Bluetooth HK200 dengan Steker Inggris
ASMHK200-GB3A	Headset Bluetooth HK200 dengan Steker Eropa
ASMHK200-KR2A	Headset Bluetooth HK200 dengan Steker Korea
ASMHK200-CN2A	Headset Bluetooth HK200 dengan Steker Tiongkok
ASMHK200-AU2A	Headset Bluetooth HK200 dengan Steker Australia
HMN4098_	Handset Model Telepon
NNTN8125_	Earpiece Nirkabel Operasi Kritis, Kabel 12 inci
NNTN8126_	Earpiece Nirkabel Operasi Kritis, Kabel 9,5 inci
NNTN8127_	POD Push-to-Talk Nirkabel Operasi Kritis
NNTN8189_	Headset Nirkabel Tanpa Keamanan & Perangkat Push-to-Talk dengan Audio Push-to-Talk, Kabel 12 Inci
NNTN8190_	Kit Aksesori Bluetooth, SP, Kabel 9,5 inci
NNTN8296_[15]	Kit Nirkabel Tersamar, meliputi dua set Earbud 2-Kabel (1 Hitam dan 1

[15] Radio Anda kompatibel dengan aksesori yang terdapat dalam daftar ini. Hubungi penyalur Anda untuk detailnya.

Nomor Komponen	Deskripsi
	Putih), Earbud 1-Kabel (Hitam), dan Adaptor 3,5 mm untuk headphone yang tersedia di pasaran
NNTN8385_[16]	Adaptor Y Nirkabel Kalung dan kait untuk Kit yang Sepenuhnya Tersamar
PMLN6463_	Kit Aksesori Bisnis Nirkabel
PMMN4095_	Mikrofon Speaker Jarak Jauh Nirkabel R2.17A
PMMN4097_	Gateway Mikrofon Mobile Nirkabel R2.17
PMLN7181_[16]	Earpiece Putar Fleksibel dengan Mikrofon Tangkai
PMLN7203_[16]	Earpiece Putar Fleksibel dengan Mikrofon Tangkai, Multipack
RLN4922_[16]	Kit Earpiece yang Sepenuhnya Tersamar

Nomor Komponen	Deskripsi
RLN6490_	Headset Nirkabel Tugas Berat Tanpa Keamanan XBT Di Belakang Leher
RLN6491_	Headset Nirkabel Tugas Berat Tanpa Keamanan XBT di Atas Kepala
RLN6550_[16]	Earpiece Putar dengan Mikrofon In-Line untuk Pod Kit Aksesori Bluetooth, Paket isi 3
RMN5050_	Mikrofon Desktop
RMN5052_	Mikrofon Ringkas
RMN5127_	Mikrofon Keypad Navigasi 4 Arah IMPRES
RMN5053_	Mikrofon Tugas Berat dengan Audio yang Disempurnakan

[16] Radio Anda kompatibel dengan aksesori yang terdapat dalam daftar ini. Hubungi penyalur Anda untuk detailnya.

Nomor Komponen	Deskripsi
RMN5054_	Mikrofon Visor dengan Audio yang Disempurnakan

Tabel 20 :Kabel

Nomor Komponen	Deskripsi
3075336B07	Kabel Pengganti Mikrofon Ringkas
3075336B10	Kabel Pengganti Mikrofon Tugas Berat/Keypad
HKN4137_	Kabel Daya ke Baterai, Kabel 10 kaki (3 meter), 15 amp (1–25 Watt)
HKN4191_	Kabel Daya ke Baterai, Kabel 10 kaki (3 meter), 20 amp (1–45 Watt)
HKN4192_	Kabel Daya ke Baterai, Kabel 20 kaki (6 meter), 20 amp (1–45 Watt)
HKN6184_	Kabel Pemrograman (MMP) Depan Mobile
PMKN4010_	Kabel Pemrograman MAP
PMKN4016_	Kabel Pemrograman dan Tes MAP
PMKN4018_	Kabel Universal Konektor Aksesori Belakang Radio Mobile dan Repeater
PMKN4033_	Kabel Ekstensi Mikrofon Bergerak, 10 kaki
PMKN4034_	Kabel Ekstensi Mikrofon Bergerak, 20 kaki
PMKN4143_	Kabel Dudukan Jauh (3 meter)
PMKN4144_	Kabel Dudukan Jauh (5 meter)
RKN4136_	Kabel Sensor Pengapian

Tabel 21 :Aksesori Desktop

Nomor Komponen	Deskripsi
3060665A04	Kabel Sambungan AS
GKN6266_	Kabel Daya Radio untuk GPN6145
GLN7318_	Baki Desktop tanpa Speaker

Nomor Komponen	Deskripsi
GPN6145_	Catu Daya Mode Sakelar dengan Tanda CE (Model 1–25 Watt)
HPN4007_	Catu Daya dan Kabel
HPN4011_	Catu Daya 14 Volt 15 Amp UNI 117/240 VAC, Steker Inggris
PMLN5072_	Kit Perangkat Keras untuk Konektor Aksesori Belakang
RSN4005_	Baki Desktop dengan Speaker

Tabel 22 :Kit Pemasangan

Nomor Komponen	Deskripsi
AY000269A01_ [17]	Pelindung Layar, Transparan (satu kemasan berisi satu unit)
RLN6465_	Kit Pemasangan Dalam Dasbor (DIN)
RLN6466_	Kit Trunnion Profil Rendah
RLN6467_	Kit Trunnion Profil Tinggi
RLN6468_	Kit Trunnion Penguncian Tombol
RLN6469_	Tas Trunion Profil Rendah
PMLN6402_	Antarmuka Penerima Transmisi Pemasangan Jauh
PMLN6403_	Antarmuka Control Head Pemasangan Jauh

Tabel 23 :Aksesori Lainnya

Nomor Komponen	Deskripsi
DQT1	Pelindung Lonjakan, Tower Mount Kit
DSISB50LNC2 MA	Pelindung Lonjakan, Coax Protector Bulkhead
HKN9557_	Adaptor Antena PL259/Mini-U, Kabel 2,4 meter (8 kaki)

[17] Radio Anda kompatibel dengan aksesori yang terdapat dalam daftar ini. Hubungi penyalur Anda untuk detailnya.

Nomor Komponen	Deskripsi
HLN9073_	Klip Gantung Mikrofon (Semua Mikrofon)
HLN9414_	Klip Gantung Mikrofon Universal (Semua Mikrofon)
PMKN4072_	Adaptor Non-PC IMPRES Mobile MMP
PMKN4070_	Adaptor Non-PC IMPRES Mobile MAP
PMLN5718_S	Papan Opsi Generik
PMLN7052_[16]	Kit Pemantau Nirkabel 1 Kabel Kritis Operasi dengan kabel ulir tembus pandang
RLN5926_	Tombol Tekan PTT
RLN5929_	Sakelar Kaki Darurat

Tabel 24 :Speaker

Nomor Komponen	Deskripsi
RSN4002_	Speaker Eksternal 13 W
RSN4003_	Speaker Eksternal 7.5 W
RSN4004_	Speaker Eksternal 5 W

www.motorolasolutions.com/mototrbo

Motorola Solutions Malaysia Sdn. Bhd.
Plot 2A, Medan Bayan Lepas,
Mukim 12, S.W.D.
11900 Bayan Lepas, Penang,
Malaysia.

无线电发射设备型号核准代码会在设备标签上注明。

MOTOROLA, MOTO, MOTOROLA SOLUTIONS and the Stylized M Logo are trademarks or registered trademarks of Motorola Trademark Holdings, LLC and are used under license. All other trademarks are the property of their respective owners. © 2017 and 2021 Motorola Solutions, Inc. All rights reserved.